NO.	ECN NO.	DESCRIPTION	DATE

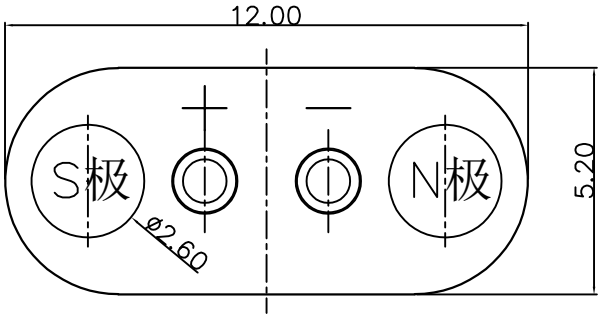

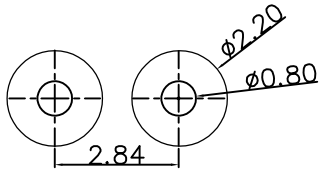

RECOMMENDED PCB LAYOUT

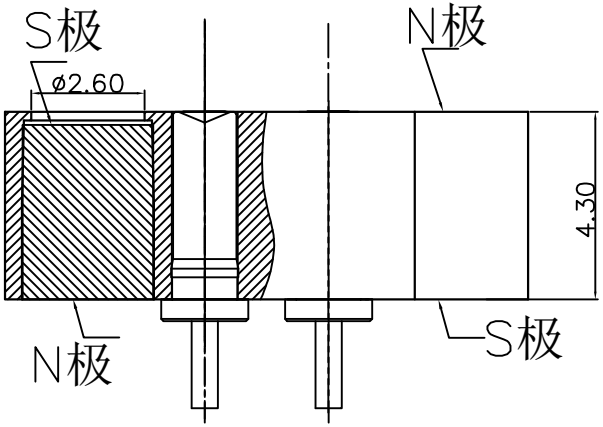

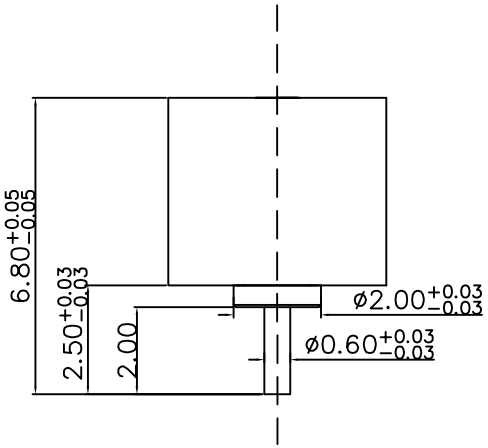

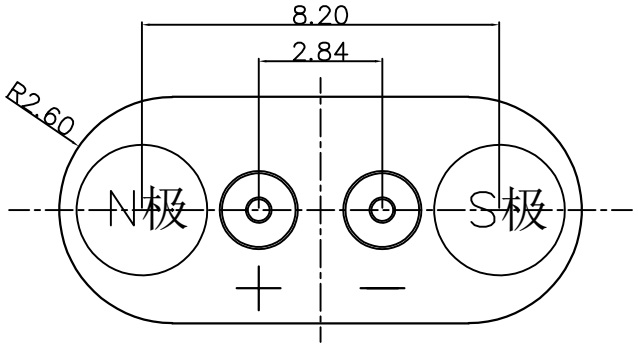

Note:

1: Material(材料):
Barrel: Brass C3604 (针体：黄铜 C3604)
Housing: PA46 black (胶芯：PA46 ，黑色).

2: Plating(电镀):
Barrel: 3u' Au over 50~80u' Ni(针体：镀金3u'，镍底50~80u'。)

3: Electrical(电气特性):
Insulation Resistance: 1,000MΩ minimum. (绝缘电阻：1,000MΩ以上)
Dielectric Withstand Voltage: 500VAC/minute. (抗击电压：500VAC/minute)

5: WorkTemperture(工作环境):
Withstanding Higt Temperature: 280℃
Operational Temperature: −20℃~ +70℃

深圳市鑫扬泽电子有限公司
HTTP://WWW.XYZPOGOPIN.COM
TEL:0755-28773277 FAX:0755-28891353

SCALE:	N/A	UNIT	mm
SHEET:	1 of 1	PROJECTION	
DATE:	2024.1.24	VER.	A.0

THE UNMARKED TOLERANCE ARE AS BELOW :

LENGTH		ANGLE	
X.XX	±0.05mm	X.XX	±0.50°
X.X	±0.10mm	X.X	±1.00°
X.	±0.20mm	X.	±2.00°

DESIGNED BY:		DWG. NO.	YZT0799-20068-02028-03
CHECKED BY:		TITLE:	成品图
APPROVED BY:			