REV.	DESCRIPTION	ECN NO.	NAME	DATE

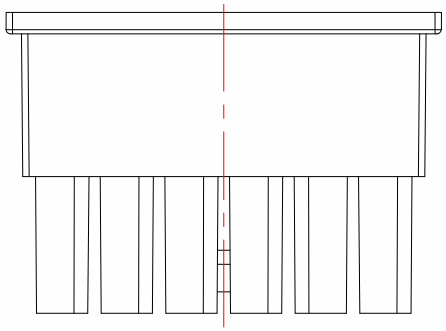

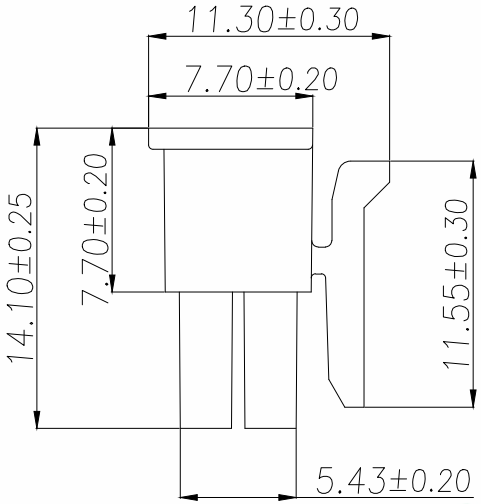

胶壳型号	CKT	匹配端子
WF-1D300A02P	2*1	WF-1C300A
WF-1D300A04P	2*2	
WF-1D300A06P	2*3	
WF-1D300A08P	2*4	
WF-1D300A10P	2*5	
WF-1D300A12P	2*6	WF-1C300C
WF-1D300A14P	2*7	
WF-1D300A16P	2*8	
WF-1D300A18P	2*9	
WF-1D300A20P	2*10	
WF-1D300A22P	2*11	
WF-1D300A24P	2*12	

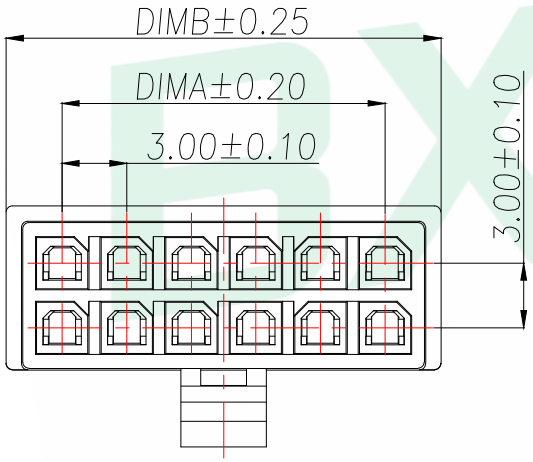

技术指标:

1.温度范围:-25°C~85°C.
2.额定电压:250V AC,DC.
3.耐电压:1500V AC/minute.
4.接触电阻:≤20mΩ .
5.绝缘电阻:≥1000MΩ.
6.额定电流:5A AC,DC.

材料:

1.塑胶:PA66 黑色

型号	CKT	A	B
WF-1D300A02P	2*1	0.00	5.20
WF-1D300A04P	2*2	3.00	8.20
WF-1D300A06P	2*3	6.00	11.20
WF-1D300A08P	2*4	9.00	14.20
WF-1D300A10P	2*5	12.00	17.20
WF-1D300A12P	2*6	15.00	20.20
WF-1D300A14P	2*7	18.00	23.20
WF-1D300A16P	2*8	21.00	26.20
WF-1D300A18P	2*9	24.00	29.20
WF-1D300A20P	2*10	27.00	32.20
WF-1D300A22P	2*11	30.00	35.20
WF-1D300A24P	2*12	33.00	38.20

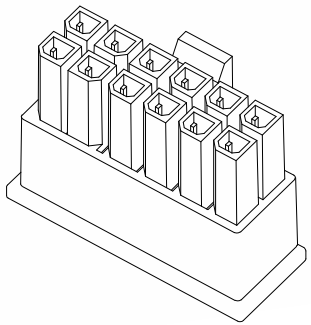

GENERAL TOLERANCE

DIM.	TOL.
.x	±0.30
.xx	±0.25
.xxx	±0.15
GENERAL ANGLE:	
x.°	±5°
x.x°	±1°

DONGGUAN BAOXUN PRECISION TECHNOLOGY CO., LTD

BXCONN®

TITLE: MX3.0MM 双排胶壳 HOUSING

DWG. NO.: WF-1D300AXP

CHECKED: MAX

PART NO.: WF-1D300AXP

DRAWN: ELLA

UNIT:	SCALE:	SHEET:	DWG. SIZE:	LAYER:
mm	none	1 of 1	A4	bxconn

APPROVED: WILL