MOV Metal Oxide Varistors

Leaded varistors, TMOV High Surge, 20 series

Series/Type:	**VCRR20****K****
Ordering code:	**VCRR20****K**
Date:	January 2020
Version:	1

© Without the permission of JORDUN Electronics, its content cannot be copied or reproduced

Construction

- Round varistor element, leaded
- Coating: epoxy resin, flame-retardant to UL 94 V-0
- Terminals: tinned wire

Features

- High performance with smaller disk diameter
- Wide operating voltage range 50 ... 680V_{RMS}
- High surge current ratings up to 10000 A
- No derating up to 85℃ ambient temperature
- Series connection of varistors and fuses to disconnect when about to fail, protecting the circuit
- Action temperature 136C, matched with 15A.136C temperature fuse

Approvals

- UL Certificate:E531647
- TUV Certificate:B1199670002
- CQC Certificate :CQC23001399122

Delivery mode

- Bulk (standard), taped versions on reel or in Ammo pack upon request
- For further details refer to chapter "Taping, packaging and lead configuration" for leaded varistors.

General technical data

Climatic category	to IEC 60068-1	40/85/56	
Operating temperature	to IEC 61051	-40 ... +130	°C
Storage temperature		-40 ... +125	°C
Electric strength	to IEC 61051	≥ 2.5	kV_{RMS}
Insulation resistance	to IEC 61051	≥ 100	MΩ

Electrical specifications and ordering codes

Maximum ratings (T_A = 85 °C)

Ordering code	Type	V_{RMS} [V]	V_{DC} [V]	i_{max} (8/20 µs) 1 time [KA]*	I_n[1)] (8/20 µs) 15 times [KA]*	W_{max} (10/1000us) [J]	P_{max} [W]
VCRR20*820KJ101	20*820KJ	50	65	10	5	56	1.0
VCRR20*101KJ101	20*101KJ	60	85	10	5	70	1.0
VCRR20*121KJ101	20*121KJ	75	100	10	5	85	1.0
VCRR20*151KJ101	20*151KJ	95	125	10	5	106	1.0
VCRR20*181KJ101	20*181KJ	115	150	10	5	130	1.0
VCRR20*201KJ101	20*201KJ	130	170	10	5	140	1.0
VCRR20*221KJ101	20*221KJ	140	180	10	5	155	1.0
VCRR20*241KJ101	20*241KJ	150	200	10	5	168	1.0
VCRR20*271KJ101	20*271KJ	175	225	10	5	190	1.0
VCRR20*301KJ101	20*301KJ	190	250	10	5	210	1.0
VCRR20*331KJ101	20*331KJ	210	270	10	5	228	1.0
VCRR20*361KJ101	20*361KJ	230	300	10	5	255	1.0
VCRR20*391KJ101	20*391KJ	250	320	10	5	275	1.0
VCRR20*431KJ101	20*431KJ	275	350	10	5	305	1.0
VCRR20*471KJ101	20*471KJ	300	385	10	5	350	1.0
VCRR20*511KJ101	20*511KJ	320	420	10	5	360	1.0
VCRR20*561KJ101	20*561KJ	350	460	10	5	366	1.0
VCRR20*621KJ101	20*621KJ	385	505	10	5	372	1.0
VCRR20*681KJ101	20*681KJ	420	560	10	5	382	1.0
VCRR20*751KJ101	20*751KJ	460	615	10	5	410	1.0
VCRR20*821KJ101	20*821KJ	510	670	10	5	421	1.0
VCRR20*911KJ101	20*911KJ	550	745	10	5	460	1.0
VCRR20*951KJ101	20*951KJ	575	765	10	5	510	1.0
VCRR20*102KJ101	20*102KJ	625	825	10	5	560	1.0
VCRR20*112KJ101	20*112KJ	680	895	10	5	620	1.0

[1)] **Note:** Nominal discharge current is the specification defined in UL1449 4th edition and tested with 8/20 µs current waveform

Characteristics (T_A=25 °C):

Ordering code	Type	V_v (1 mA) [V]	ΔV_v (1 mA) [%]	Max clamping voltage Vc [V]	Ic [A]	C_{typ} (1 kHz) [pF]
VCRR20*820KJ101	20*820KJ	82	±10	135	100	2400
VCRR20*101KJ101	20*101KJ	100	±10	165	100	2000
VCRR20*121KJ101	20*121KJ	120	±10	200	100	1700
VCRR20*151KJ101	20*151KJ	150	±10	250	100	1300
VCRR20*181KJ101	20*181KJ	180	±10	300	100	1100
VCRR20*201KJ101	20*201KJ	200	±10	340	100	900
VCRR20*221KJ101	20*221KJ	220	±10	360	100	830
VCRR20*241KJ101	20*241KJ	240	±10	395	100	740
VCRR20*271KJ101	20*271KJ	270	±10	455	100	670
VCRR20*301KJ101	20*301KJ	300	±10	500	100	610
VCRR20*331KJ101	20*331KJ	330	±10	550	100	560
VCRR20*361KJ101	20*361KJ	360	±10	595	100	510
VCRR20*391KJ101	20*391KJ	390	±10	650	100	460
VCRR20*431KJ101	20*431KJ	430	±10	710	100	430
VCRR20*471KJ101	20*471KJ	470	±10	775	100	390
VCRR20*511KJ101	20*511KJ	510	±10	840	100	360
VCRR20*561KJ101	20*561KJ	560	±10	910	100	320
VCRR20*621KJ101	20*621KJ	620	±10	1025	100	290
VCRR20*681KJ101	20*681KJ	680	±10	1120	100	270
VCRR20*751KJ101	20*751KJ	750	±10	1240	100	260
VCRR20*821KJ101	20*821KJ	820	±10	1355	100	230
VCRR20*911KJ101	20*911KJ	910	±10	1500	100	220
VCRR20*951KJ101	20*951KJ	950	±10	1570	100	200
VCRR20*102KJ101	20*102KJ	1000	±10	1650	100	180
VCRR20*112KJ101	20*112KJ	1100	±10	1815	100	130

2) *Please refer to the suffix code

Schematic Diagram:

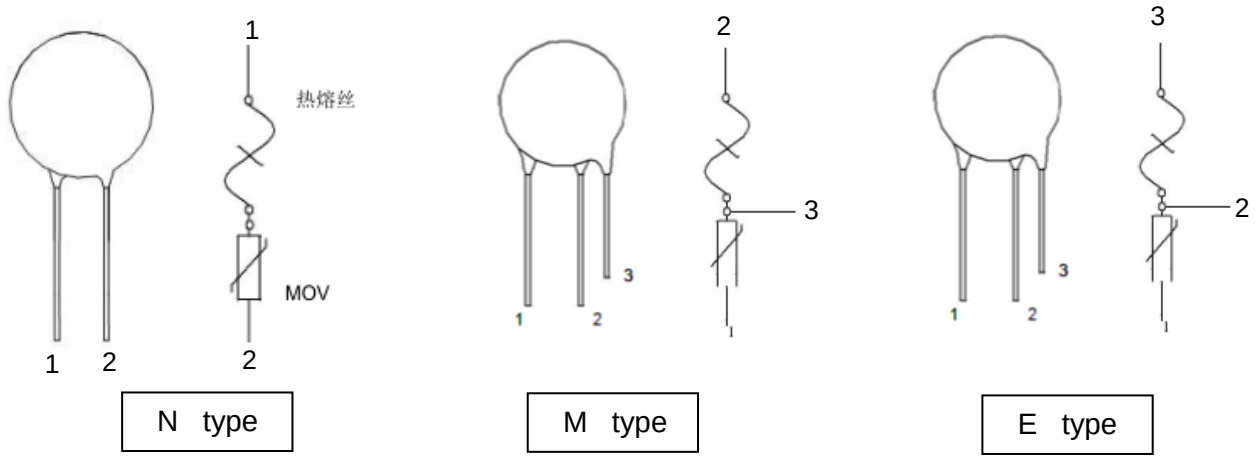

Dimensional drawings

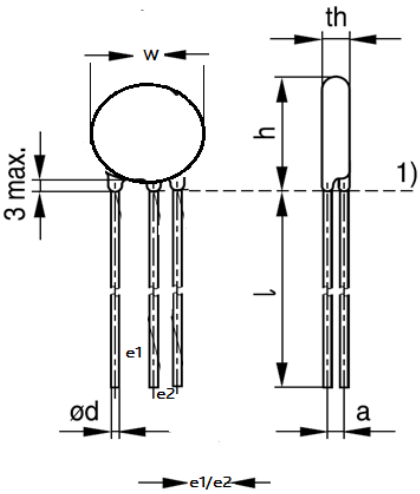

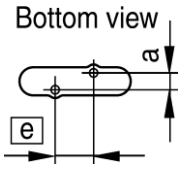

Weight

Nominal diameter mm	V_{RMS} V	Weight g
20	50…680	3.5…35

Different voltage levels result in differences in weight.

Dimensions

Ordering code[2)]	[e1/e2] ±1 mm	w_{max} mm	h_{max} mm	th_{max} mm	a_{typ} mm	l_{min} mm	∅d±0.05 mm
VCRR20*820KJ101	7.5/5	23	25	7	4.3	25.0	1.0
VCRR20*101KJ101	7.5/5	23	25	7	4.3	25.0	1.0
VCRR20*121KJ101	7.5/5	23	25	7	4.3	25.0	1.0
VCRR20*151KJ101	7.5/5	23	25	7	4.3	25.0	1.0
VCRR20*181KJ101	7.5/5	23	25	7	4.5	25.0	1.0
VCRR20*201KJ101	7.5/5	23	25	8	4.5	25.0	1.0
VCRR20*221KJ101	7.5/5	23	25	8	4.5	25.0	1.0
VCRR20*241KJ101	7.5/5	23	25	8	4.5	25.0	1.0
VCRR20*271KJ101	7.5/5	23	25	8.5	4.5	25.0	1.0
VCRR20*301KJ101	7.5/5	23	25	8.7	4.5	25.0	1.0
VCRR20*331KJ101	7.5/5	23	25	8.8	4.5	25.0	1.0
VCRR20*361KJ101	7.5/5	23	25	9	4.6	25.0	1.0
VCRR20*391KJ101	7.5/5	23	25	9.5	4.8	25.0	1.0
VCRR20*431KJ101	7.5/5	23	25	9.4	5.0	25.0	1.0
VCRR20*471KJ101	7.5/5	23	25	9.6	5.1	25.0	1.0
VCRR20*511KJ101	7.5/5	23	25	9.8	5.3	25.0	1.0
VCRR20*561KJ101	7.5/5	23	25	10.1	5.3	25.0	1.0
VCRR20*621KJ101	7.5/5	23	25	10.2	5.8	25.0	1.0
VCRR20*681KJ101	7.5/5	23	25	10.3	5.4	25.0	1.0
VCRR20*751KJ101	7.5/5	23	25	10.7	6.1	25.0	1.0
VCRR20*821KJ101	7.5/5	23	25	11.1	6.4	25.0	1.0
VCRR20*911KJ101	7.5/5	23	25	11.5	6.7	25.0	1.0
VCRR20*951KJ101	7.5/5	23	25	11.9	6.9	25.0	1.0
VCRR20*102KJ101	7.5/5	23	25	11.9	7.1	25.0	1.0
VCRR20*112KJ101	7.5/5	23	25	12.0	7.4	25.0	1.0

2) *Please refer to the suffix code.

Reliability data

Test	Test methods/conditions	Requirement
Varistor voltage	The voltage between two terminals with the specified measuring current applied is called V_V (1 mA_{DC} @ 0.2 ... 2 s).	To meet the specified value
Clamping voltage	The maximum voltage between two terminals with the specified standard impulse current (8/20 µs) applied.	To meet the specified value
Endurance at upper category temperature	1000 h at UCT After having continuously applied the maximum allowable AC voltage at UCT ±2 °C for 1000 h, the specimen shall bestored at room temperature and normal humidity for 1 to 2 h. Thereafter, the change of V_V shall be measured.	$\lvert\Delta V/V$ (1 mA)$\rvert \leq 10\%$
Surge current derating, 8/20 µs	10 surge currents (8/20 µs), unipolar, interval 30 s, amplitude corresponding to derating curve for 10 impulses at 20 µs	$\lvert\Delta V/V$ (1 mA)$\rvert \leq 10\%$ (measured in direction of surge current) No visible damage
Surge current derating, 2 ms	10 surge currents (2 ms), unipolar, interval 120 s, amplitude corresponding to derating curve for 10 impulses at 2 ms	$\lvert\Delta V/V$ (1 mA)$\rvert \leq 10\%$ (measured in direction of surge current) No visible damage
Electric strength	IEC 61051-1, test 4.9.2 Metal balls method, 2500 V_{RMS}, 60 s The varistor is placed in a container holding 1.6 ±0.2 mm diameter metal balls such that only the terminations of the varistor are protruding. The specified voltage shall be applied between both terminals of the specimen connected together and the electrode inserted between the metal balls.	No breakdown

Test	Test methods/conditions	Requirement
Climatic sequence	The specimen shall be subjected to: a) dry heat at UCT, 16 h, IEC 60068-2-2, test Ba b) damp heat, 1st cycle: 55 °C, 93% r. H., 24 h, IEC 60068-2-30, test Db c) cold, LCT, 2 h, IEC 60068-2-1, test Aa d) damp heat, additional 5 cycles: 55 °C/25 °C, 93% r. H., 24 h/cycle, IEC 60068-2-30, test Db. Then the specimen shall be stored at room temperature and normal humidity for 1 to 2 h. Thereafter, the change of V_V shall be measured. Thereafter, insulation resistance R_{ins} shall be measured at V = 500 V.	$\lvert\Delta V/V$ (1 mA)$\rvert \leq 10\%$ $R_{ins} \geq 100$ MΩ
Rapid change of temperature	IEC 60068-2-14, test Na, LCT/UCT, dwell time 30 min, 5 cycles	$\lvert\Delta V/V$ (1 mA)$\rvert \leq 5\%$ No visible damage
Damp heat, steady state	IEC 60068-2-78, test Ca The specimen shall be subjected to 40 ±2 °C, 90 to 95% r. H. for 56 days without load / with 10% of the maximum continuous DC operating voltage V_{DC}. Then stored at room temperature and normal humidity for 1 to 2 h. Thereafter, the change of V_V shall be measured. Thereafter, insulation resistance R_{ins} shall be measured at V = 500 V (insulated varistors only).	$\lvert\Delta V/V$ (1 mA)$\rvert \leq 10\%$ $R_{ins} \geq 100$ MΩ

Test	Test methods/conditions	Requirement
Solderability	IEC 60068-2-20, test Ta, method 1 with modified conditions for lead-free solder alloys: 245 °C, 3 s: After dipping the terminals to a depth of approximately 3 mm from the body in a soldering bath of 245 °C for 3 s, the terminals shall be visually examined.	The inspection shall be carried out under adequate light with normal eyesight or with the assistance of a magnifier capable of giving a magnification of 4 to 10 times. The dipped surface shall be covered with a smooth and bright solder coating with no more than small amounts of scattered imperfections such as pinholes or un-wetted or de-wetted areas. These imperfections shall not be concentrated in one area.
Resistance to soldering heat	IEC 60068-2-20, test Tb, method 1A, 260 °C, 10 s: Each lead shall be dipped into a solder bath having a temperature of 260 ±5 °C to a point 2.0 to 2.5 mm from the body of the specimen, be held there for 10 ±1 s and then be stored at room temperature and normal humidity for 1 to 2 h. The change of VV shall be measured and the specimen shall be visually examined.	$\lvert\Delta V/V$ (1 mA)$\rvert \leq 5\%$ No visible damage
Tensile strength	IEC 60068-2-21, test Ua1 After gradually applying the force specified below and keeping the unit fixed for 10 s, the terminal shall be visually examined for any damage. Force for wire diameter: 0.6 mm = 10 N 0.8 mm = 10 N 1.0 mm = 20 N	$\lvert\Delta V/V$ (1 mA)$\rvert \leq 5\%$ No break of solder joint, no wire break

Test	Test methods/conditions	Requirement
Vibration	IEC 60068-2-6, test Fc, method B4 Frequency range: 10 … 55 Hz Amplitude: 0.75 mm or 98 m/s^2 Duration: 6 h (3 · 2 h) Pulse: sine wave After repeatedly applying a single harmonic vibration according to the table above. The change of V_V shall be measured and the specimen shall be visually examined.	$\lvert\Delta V/V$ (1 mA)$\rvert \leq 5\%$ No visible damage
Bump	IEC 60068-2-29, test Eb Pulse duration: 6 ms Max. acceleration: 400 m/s^2 Number of bumps: 4000 Pulse: half sine	$\lvert\Delta V/V$ (1 mA)$\rvert \leq 5\%$ No visible damage
Fire hazard	IEC 60695-11-5 (needle flame test) Severity: vertical 10 s	5 s max.

Note:
UCT = Upper category temperature
LCT = Lower category temperature
R_{ins} = Insulation resistance

v/i characteristics

v = f (i) - for explanation of the characteristics refer to "General technical information".

A = Leakage current, B = Protection level } for worst-case varistor tolerances

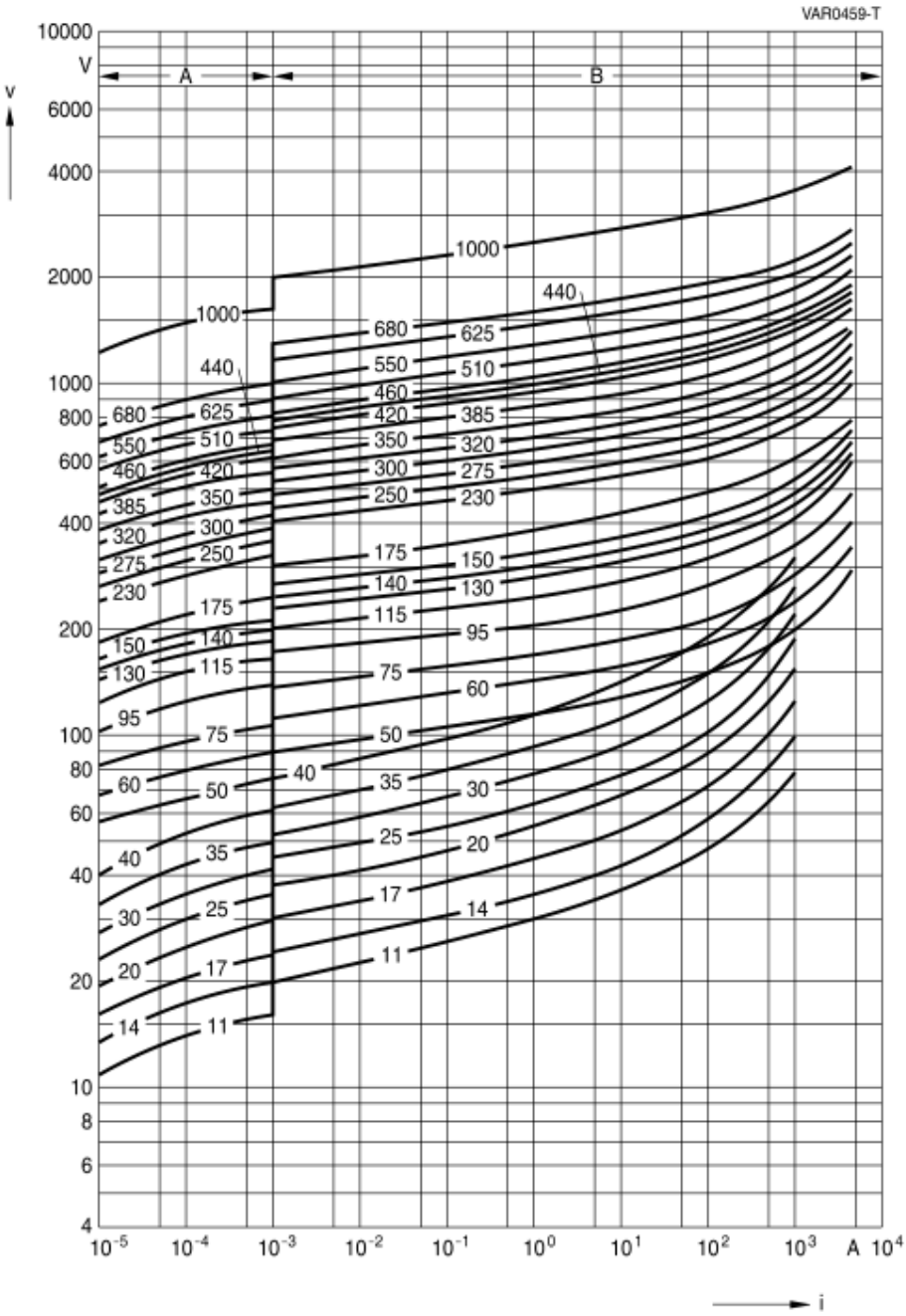

Derating curves

Maximum surge current i_{max} = f (t_r, pulse train)
For explanation of the derating curves refer to "General technical information",

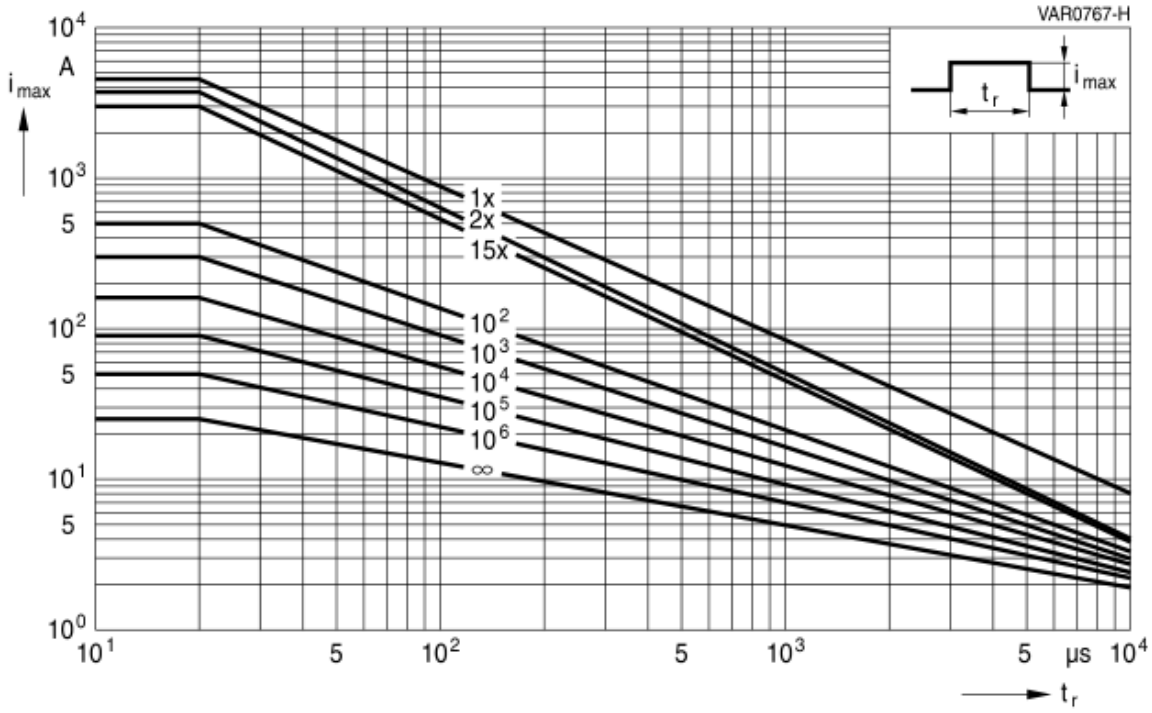

Taping, packaging and lead configuration

1 JORDUN Electronics ordering code system for leaded varistors

VCRR	20	N/M/E	471	K	J	1	0	1	1

logo

Disc Diameter

Design structure:
N: 2 Pin M:Fuse is pin 2 E:Fuse is pin 3

Varistor Voltage:
471:470V 561:560V
470:47V 102:1000V

Tolerance of Varistor Voltage:
K=±10% J=±5%
S=Special tolerance

Design:
J=High Joule N=High Energy T=Automotive
Remark: eg:printing 14N561KJ or 14E561KJ or 14M561KJ

Lead Configuration:
1=Straight Leads 2=Inner Pin
3=Forward and Backward Pin 4=Outer K Pin
Plase refer to" Standard leads and non-standard crimp styles"

Packaging:
0=Bulk 1=Taping Style for further information please refer to chapter "Taping, packaging and lead configuration"

Bulk Pin Length:
1=3.5±0.5mm 2=3.0±0.5mm
3=4.0±0.5mm 4=25±0.5mm
5=5.0 ±0.5mm

Internal Coding:
ABCDEF

2 Taping and packaging of leaded varistors

Tape packaging for lead spacing $\boxed{e}$ = 5 fully conforms to IEC 60286-2, while for lead spacings $\boxed{e}$ = 7.5 and 10 the taping mode is based on this standard.

2.1 Taping in accordance with IEC 60286-2 for lead spacing 5.0 mm

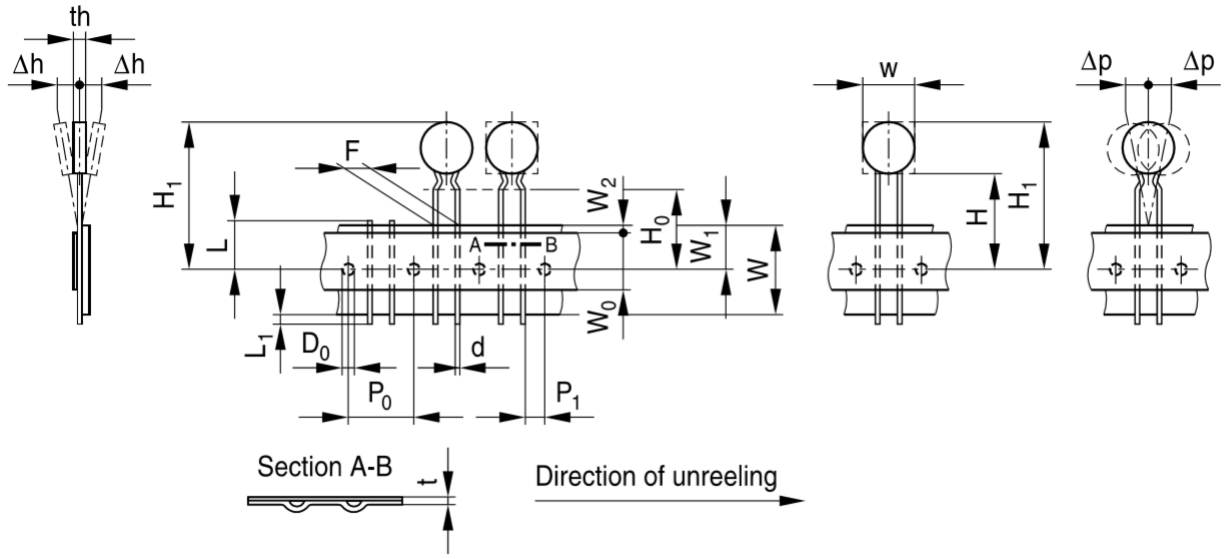

F ≙ $\boxed{e}$ = 5.0 mm

VAR0410-X-E

2.2 Taping based on IEC 60286-2 for lead spacing 7.5 and 10 mm

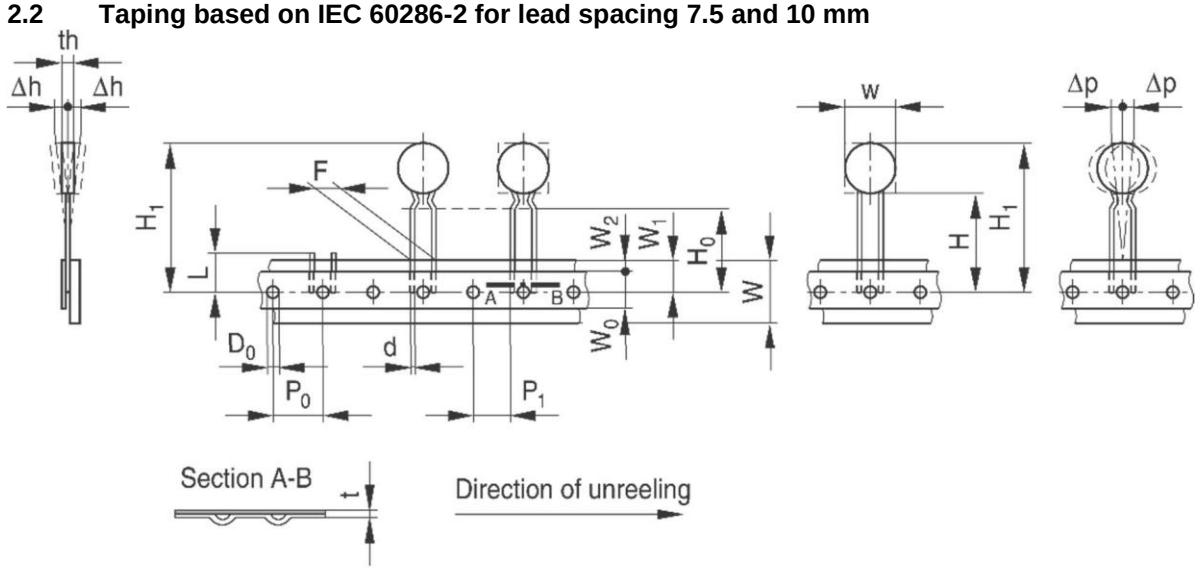

F ≙ $\boxed{e}$ = 7.5 mm
F ≙ $\boxed{e}$ = 10 mm

VAR0395-J-E

2.3 Tape dimensions (in mm)

Symbol	$\boxed{e}$ = 5.0	Tolerance	$\boxed{e}$ = 7.5	Tolerance	$\boxed{e}$ = 10.0	Tolerance	Remarks
w th d	 0.6	max. max. ±0.05	 0.8	max. max. ±0.05	 1.0	max. max. ±0.05	see tables in each series under "Dimensions "
P_0 P_1	12.7 3.85	±0.3 ±0.7	12.7[1)] 8.95	±0.3 ±0.8	12.7 7.7	±0.3 ±0.8	±1 mm/20 sprocket holes
F Δh Δp	5.0 0 0	±10 ±2.0 ±1.3	7.5 depends on s 0	±0.8 ±2.0	10.0 depends on s 0	±0.8 ±2.0	measured at top of component body
W W_0 W_1 W_2	18.0 5.5 9.0 3.0	±0.5 min. ±0.5 max.	18.0 11.0 9.0 3.0	±0.5 min. +0.75/−0.5 max.	18.0 11.0 9.0 3.0	±0.5 min. +0.75/−0.5 max.	Peel-off force ≥ 5 N
H H_0 H_1	18.0 16.0 (18.0) 32.2	+2.0/−0 ±0.5 max.	18.0 16.0 (18.0) 45.0	+2.0/−0 ±0.5 max.	18.0 16.0 45.0	+2.0/−0 ±0.5 max.	[2)] [3)]
D_0 t L L_1	4.0 0.9 11.0 0.5	±0.2 max. max. max.	4.0 0.9 11.0	±0.2 max. max.	4.0 0.9 11.0	±0.2 max. max.	without lead

1) Taping with P_0 = 15.0 mm upon request
2) Applies only to uncrimped types
3) Applies only to crimped types (H_0 = 18 upon request

2.4 Ammo pack dimensions

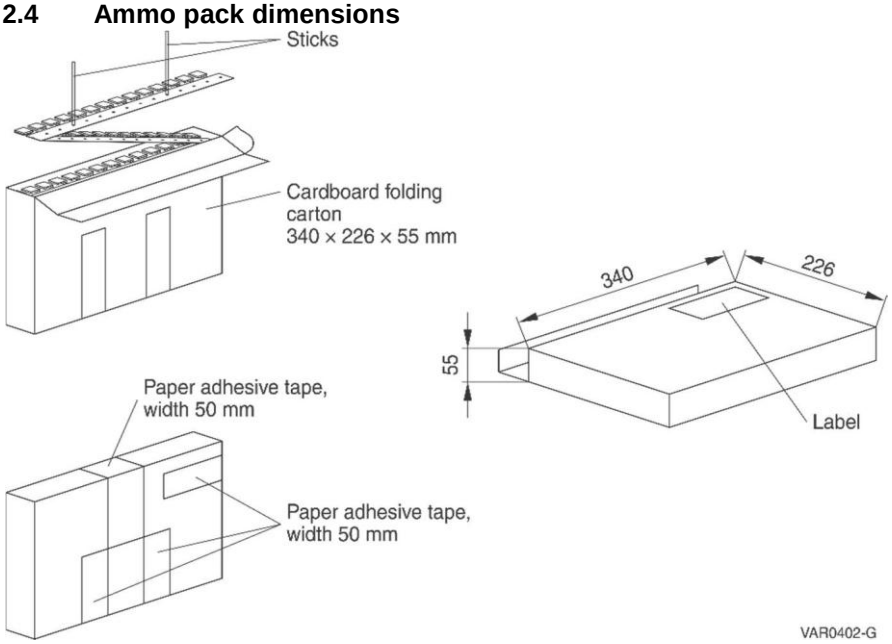

2.5 Quantities Per Packaging

Part No	Voltage	Bulk		Ammo Packing(Taping)	
		Bag	Carton	Box	Carton
7D	181-821	1000	20000	1000	10000
10D	180-182	1000	10000	1000	10000
14D	180-182	500	8000	800	8000
20D	180-182	250	5000	----	----
25D	180-182	200	3000	----	----

3 Lead configuration

Straight leads are standard for disk varistors. Other lead configurations as crimp style or customerspecific lead wire length according to 3.1, 3.2, 3.3 and 3.4 are optional. Crimped leads (non-standard) are differently crimped for technical reasons; the individual crimp styles are denot-ed by consecutive numbers (S, S2 through S5) as shown in the dimensional drawings below.
The crimp styles of the individual types can be seen from the type designation in the ordering tables.

3.1 Standard leads and non-standard crimp styles

The basic dimensions in figure 1 to 5 are valid for types with either round or square (EnergetiQ series) component head

Standard,
straight leads

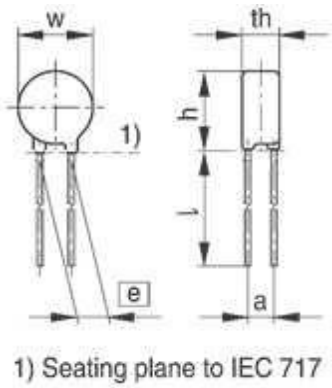

Figure 1

Non-standard,
crimp style S2

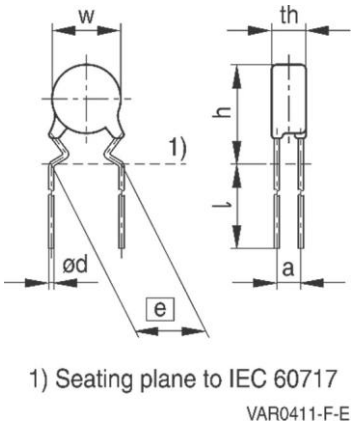

Figure 2

Non-standard,
crimp style S3

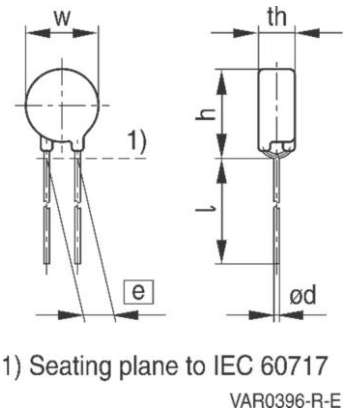

Figure 3

Non-standard,
crimp style S5

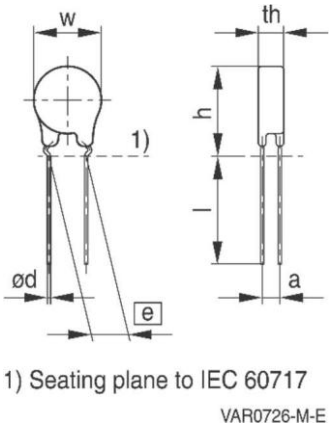

Figure

3.2 Trimmed leads (non-standard)

Varistors with cut leads available upon request.

Lead length tolerances:

Straight leads	+/-0.8 mm
Crimped leads	+/-0.5 mm
Minimum lead length	3.0 mm

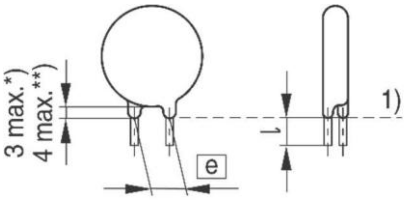

1) Seating plane to IEC 60717
*) For round component head
**) For EnergetiQ series, square component head
VAR0642-U-E

Cautions and warnings

General

1. JORDUN Electronics metal oxide varistors (MOV) are designed for specific applications and should not be used for purposes not identified in our specifications, application notes and data books unless otherwise agreed with JORDUN Electronics during the design-in-phase.

2. Ensure suitability of MOV through reliability testing during the design-in phase. The MOV should be evaluated taking into consideration worst-case conditions.

3. For applications of MOV in line-to ground circuits based on various international and local standards there are restrictions existing or additional safety measures required.

Storage

1. Store MOV only in original packaging. Do not open the package prior to processing.

2. Recommended storage conditions in original packaging:

Storage temperature:	-25 °C … +45 °C
Relative humidity:	<75% annual average, <95% on maximum 30 days a year.
Dew precipitation:	Is to be avoided.

3. Avoid contamination of an MOV's during storage, handling and processing.

4. Avoid storage of MOVs in harmful environments that can affect the function during long-term operation (examples given under operation precautions).

5. The MOV type series should be soldered after shipment from JORDUN ELECTRONIC within the time specified.

MOV-J,N,T	24 months

Handling

1. MOVs must not be dropped.

2. Components must not be touched with bare hands. Gloves are recommended.

3. Avoid contamination of the surface of MOV electrodes during handling, be careful of the sharp edge of MOV electrodes.

Soldering (where applicable)

1. Use rosin-type flux or non-activated flux.

2. Insufficient preheating may cause ceramic cracks.

3. Rapid cooling by dipping in solvent is not recommended.

4. Complete removal of flux is recommended.

5. Temperatures of all preheat stages and the solder bath must be strictly controlled especially for T series

Mounting

1. Potting, sealing or adhesive compounds can produce chemical reactions in the MOV ceramic that will degrade the component's electrical characteristics.

2. Overloading MOVs may result in ruptured packages and expulsion of hot materials. For this reason the MOVs should be physically shielded from adjacent components.

Operation

1. Use MOVs only within the specified temperature operating range

2. Use MOVs only within the specified voltage and current ranges.

3. Environmental conditions must not harm the MOVs. Use MOVs only in normal atmospheric conditions. Avoid use in the presence of deoxidizing gases (chlorine gas, hydrogen sulfide gas, ammonia gas, sulfuric acid gas, etc), corrosive agents, humid or salty conditions, Avoid contact with any liquids and solvents.

Symbols and terms

Symbol	Term
C	Capacitance
C_{typ}	Typical capacitance
i	Current
i_c	Current at which $V_{c, max}$ is measured
I_{leak}	Leakage current
i_{max}	Maximum surge current (also termed peak current)
I_{max}	Maximum discharge current
I_n	Nominal discharge current to UL 1449
LCT	Lower category temperature
L_{typ}	Typical inductance
P_{max}	Maximum average power dissipation
R_{ins}	Insulation resistance
R_{min}	Minimum resistance
T_A	Ambient temperature
t_r	Duration of equivalent rectangular wave
UCT	Upper category temperature
v	Voltage
V_{clamp}	Clamping voltage
$v_{c, max}$	Maximum clamping voltage at specified current i_c DC operating voltage
V_{DC}	Maximum jump start voltage
V_{jump}	Maximum voltage
v_{max}	Operating voltage
V_{op}	AC operating voltage, root-mean-square value
V_{RMS}	Root-mean-square value of max. DC operating voltage incl. ripple current
$V_{RMS, op, max}$	Super imposed surge voltage
V_{surge}	Varistor voltage
V_V	Tolerance of varistor voltage
ΔV_V	Maximum load dump
W_{LD}	Maximum energy absorption
W_{max}	
e	Lead spacing

All dimensions are given in mm.

The commas used in numerical values denote decimal points.

Release:Version January,2020