ROHS

REV.	ECN NO.	DESCRIPTION	DRAW	DATE

25PIN

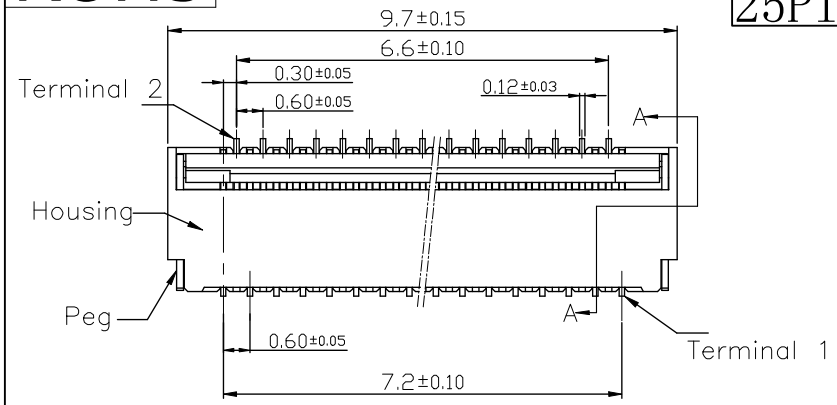

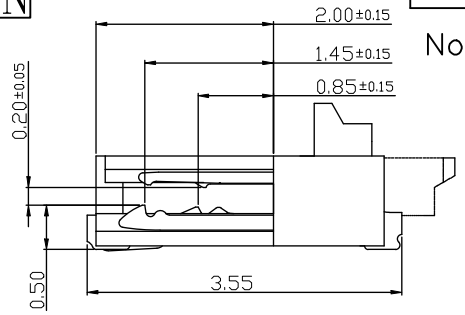

SEC A–A
Scale 2:1

Note:

1.Material
- 1.1: Housing: LCP UL94–V0 Color: White
- 1.2: Actuator: LCP OR PA UL94–V0 Color:Black.
- 1.3: Contact: Phosphor Bronze.
- 1.4: LEG: Phosphor Bronze.

2.Plating
- 2.1: Contact: See Part Number.
- 2.2: LEG: Matte Tin Plating Over Nickel.

3.Rating:
- 3.1: Operating Voltage: 30V AC/DC.
- 3.2: Current Rating: 0.2A AC/DC.
- 3.3: Operating Temperature:–55°C~+85°C.

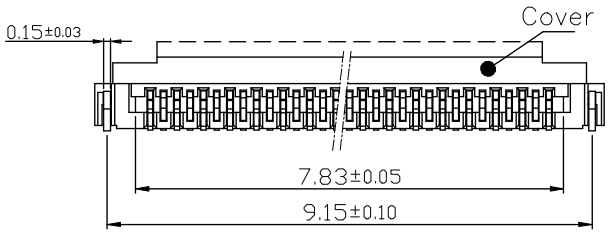

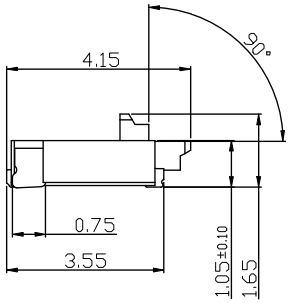

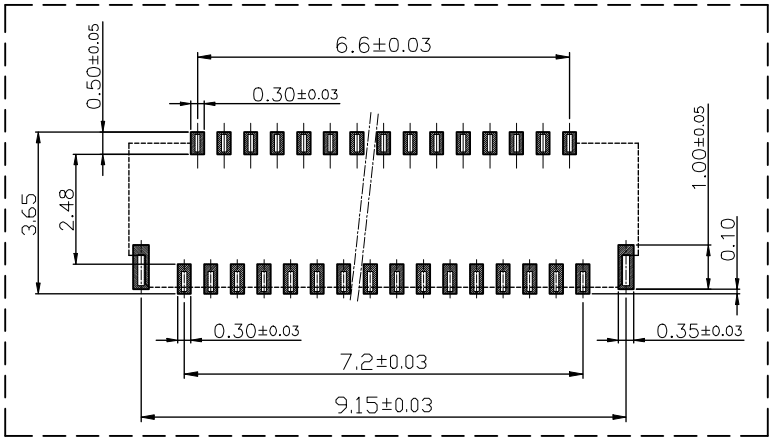

Recommended PCB mounting pattern and metal mask dimensions

Recommended metal mask thickness: t=0.1

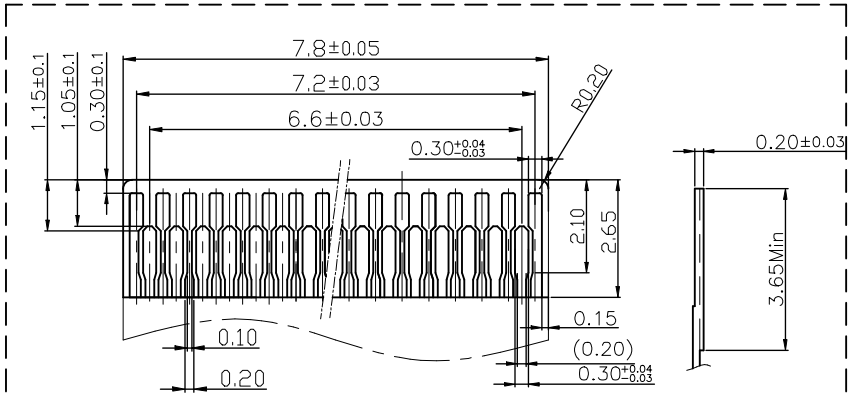

Recommended FPC/FFC Dimensions

COSTOMER DRAWING			LAILAN 深圳市莱联电子有限公司 SHENZHEN LAILIAN ELECTRONICS CO.,LTD			
DRAWING			TITLE	FPC连接器0.3间距25PIN翻盖式双侧触点上下接	REV.	A
CHECKED						
APPROVED			PART NO.	LAIL-FPC-CDX01-25P0.3-W	UNITS	mm
TOLERANCES ARE						
30-150	±0.35	ANGLE	DWG. NO.		Projection	
10-30	±0.2					
5-10	±0.15	±3°				
0-5	±0.1					