ROHS

39PIN

REV.	ECN NO.	DESCRIPTION	DRAW	DATE

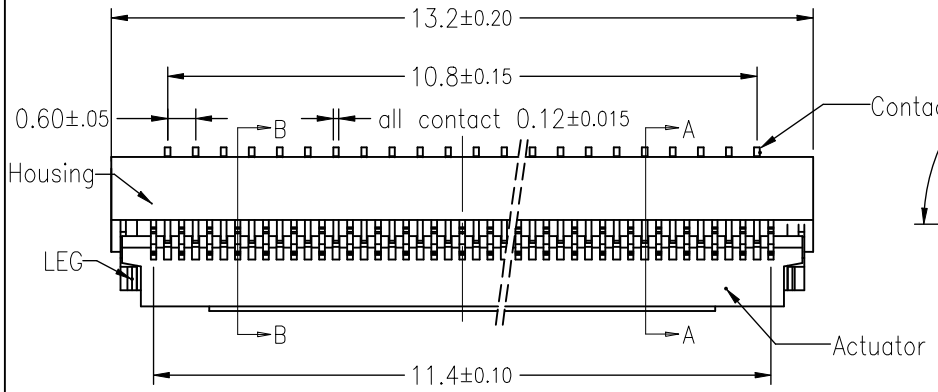

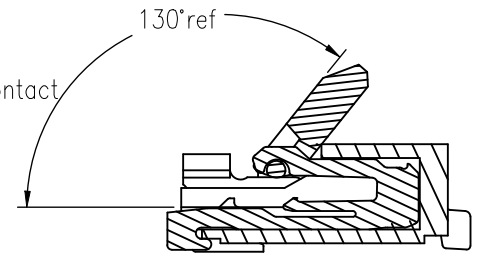

When Actuator Is Opened

Scale 2:1

Note:

1.Material

1.1: Housing: LCP UL94-V0 Color:Natural.Or Black

1.2: Actuator: PA9T UL94-V0 Color:Black Or Natural

1.3: Contact: Phosphor Bronze.

1.4: LEG: Phosphor Bronze.

2.Plating

2.1: Contact: See Part Number.

2.2: LEG: Matte Tin Plating Over Nickel.

3.Rating:

3.1: Operating Voltage: 30V AC/DC.

3.2: Current Rating: 0.2A AC/DC.

3.3: Operating Temperature:-55°C~+85°C.

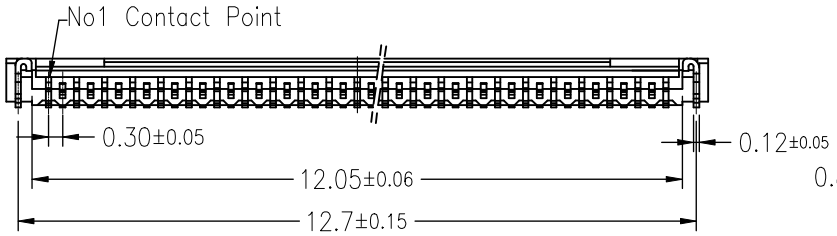

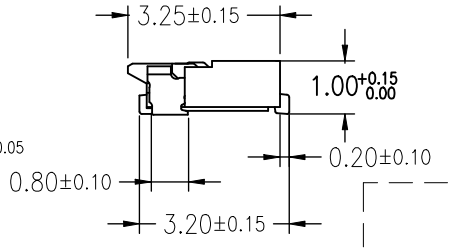

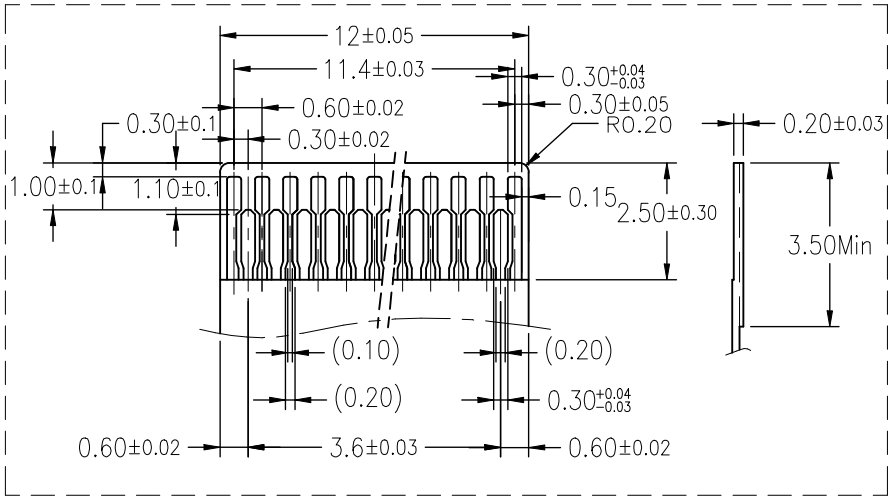

APPLICABLE FFC/FPC

FFC/FPC THICKNESS=0.20±0.03

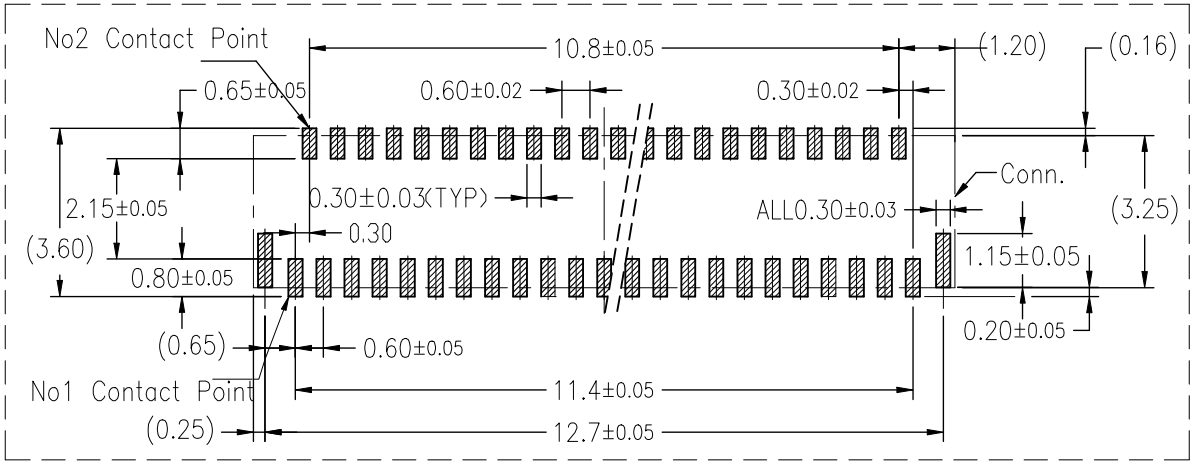

RECOMMEND PCB LAYOUT

COSTOMER DRAWING			深圳市莱联电子有限公司 SHENZHEN LAILIAN ELECTRONICS CO.,LTD		
DRAWING					
CHECKED					
APPROVED					
TOLERANCES ARE			TITLE	FPC连接器0.3间距39PIN翻盖下接卧贴	REV. A
30-150	±0.35	ANGLE	PART NO.	LAIL-FPC-CX01-39P0.3-W	UNITS mm
10-30	±0.2				
5-10	±0.15	±3°	DWG. NO.		Projection
0-5	±0.1				