PRODUCT CATALOG

HIROSE ELECTRIC CO.,LTD.

DF56 Series

0.3mm Pitch, Vertical Mating, Micro-Coaxial Connectors

Thin coaxial

P= 0.3 mm

Thin coaxial

P= 0.3mm

Vertical

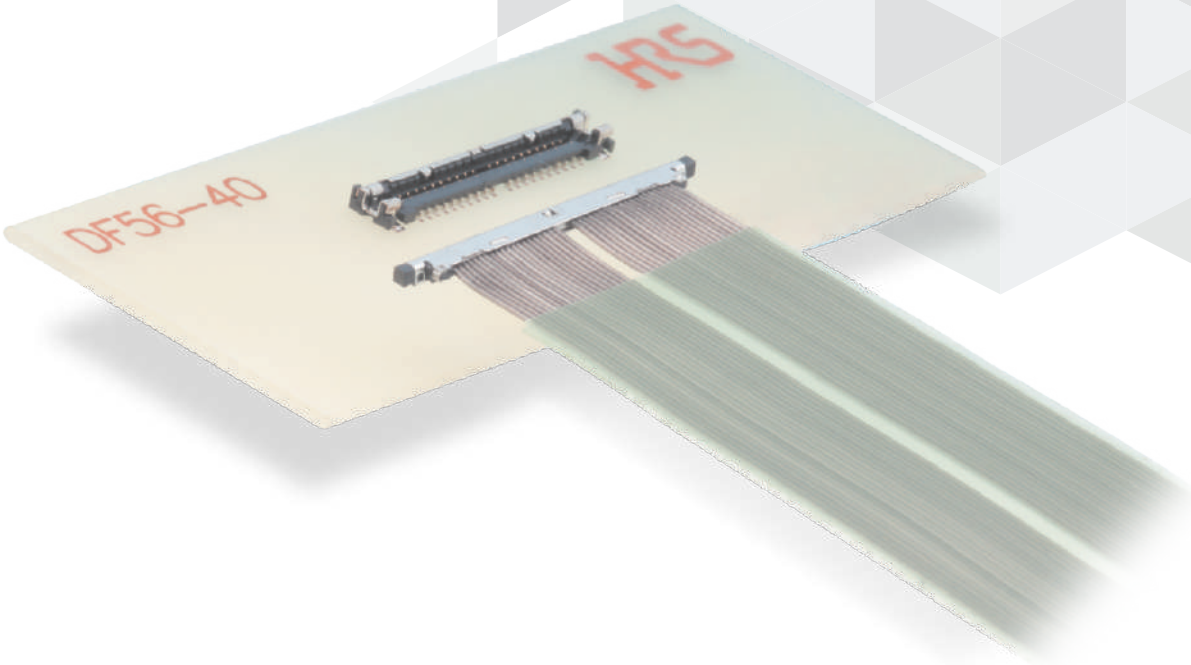

Jul.1.2026 Copyright 2026 HIROSE ELECTRIC CO., LTD. All Rights Reserved.

Product Page
https://www.hirose.com/en/product/series/DF56

Mar. 2025

Features

1. Space-Saving

Small pitch (0.3mm) and vertical mated allow to use in space-restricted areas.
It's a small connector with mated height of 1.25mm (1.35mm Max.) and depth of 2.6mm.

2. Compatibility with Small Diameter Hinges

44 AWGx40 are compatible with hinge diameters of ϕ2.8mm, which allows wiring in small hinge inside devices.

3. Reliable Contact Design

Despite its small mated height, unique contact configuration assures highly reliable connection, with effective mating length of 0.21mm.

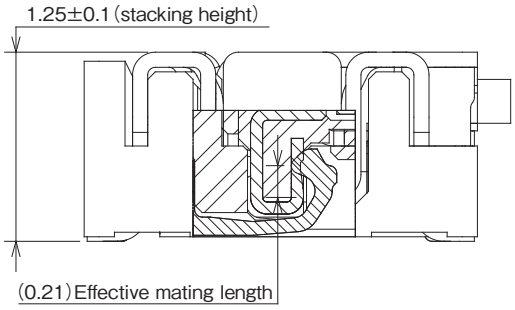

4. Robust Plug Design

Formed metal shells on the top and side surfaces form a strong and rigid assembly.

5. Enhanced shielding and ground connections

Metal shells on the plug and receptacle connect to each other with a reliable multi-point ground contacts, assuring reliable ground connection and EMC protection.

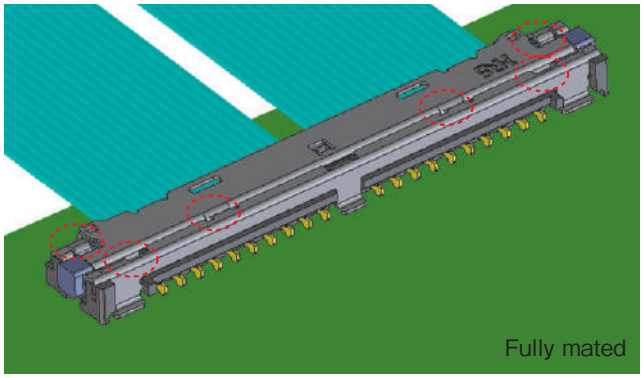

Jul.1.2026 Copyright 2026 HIROSE ELECTRIC CO., LTD. All Rights Reserved.

6. Reliable Lock

Fully mated condition is assured with reliable locks at 4 locations, confirming it with a distinct tactile click.

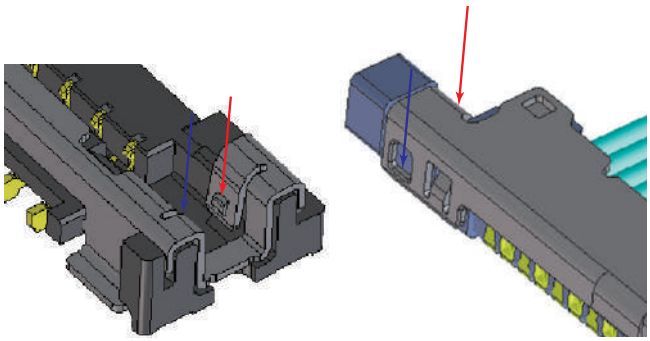

4-point lock: 2 points at each end

7. Solder Wicking Prevention

Nickel barriers prevent solder wicking in the critical contact areas. (receptacle side)

8. RoHS, Halogen-free

No chlorine or bromine exceeding the standard values are used in this connector.

*As defined by IEC61249-2-21
Br: 900 ppm maximum, Cl: 900 ppm maximum, Cl + Br combined: 1,500 ppm maximum.

Jul.1.2026 Copyright 2026 HIROSE ELECTRIC CO., LTD. All Rights Reserved.

Specifications

Rated Current (Note 1)	42 AWG: 0.2A 44 AWG: 0.15A 46 AWG: 0.1A	Operating Temperature Range (Note 2)	-35 to +85℃
		Storage Temperature Range (Note 3)	-10 to +60℃
		Operating Humidity Range	20% to 80%
Rated Voltage	30V AC	Storage Humidity Range (Note 3)	40% to 70%

Item	Specification	Conditions
Insulation Resistance	50MΩ Min.	Measured at 100V DC
Withstanding Voltage	No insulation breakdown	100V AC / 1 min.
Contact Resistance	Signal: 80mΩ Max. Ground: 80mΩ Max.	Measured at 100mA (0 or 1,000Hz)
Vibration	No electrical discontinuity of 1μs or more	Frequency: 10 to 55Hz, single amplitude of 0.75mm, 10 cycles in each of the 3 axis
Humidity	Contact Resistance (change from initial value) 50mΩ Max. Insulation Resistance: 25MΩ Min.	96 hours at of +40 ± 2℃ , and humidity of 90 to 95%
Temperature Cycle	Contact Resistance (change from initial value) 50mΩ Max. Insulation Resistance: 25MΩ Min.	-55℃ → +5 to +35℃ → +85℃ → +5 to +35℃ Time: 30 min. → 2 to 3 min. → 30 min. → 2 to 3 min. 5 cycles
Durability	Contact Resistance (change from initial value) 50mΩ Max.	20 times
Resistance to Soldering Heat	No deformation of affecting performance	Reflow: At the recommended temperature profile Manual soldering: +350℃ for 3 seconds

Note 1 : Temperature rise of connector body only, and that of cable is not included.
Note 2 : Includes temperature rise caused by current flow.
Note 3 : The term "storage" refers to products stored for a long period prior to mounting and use. The operating temperature and humidity range covers the non-conducting condition of installed connectors in storage, shipment or during transportation after board mounting.

Materials / Finish

Item	Component	Material	Color / Finish	Remarks
Receptacle	Insulator	LCP	Black	UL94V-0
	Contact	Phosphor bronze	Gold Pating	-
	Retention Tab	Phosphor bronze	Tin Plating	-
Plug	Insulator	LCP	Black	UL94V-0
	Contact	Phosphor bronze	Gold Pating	-
	Exterior Shell	Stainless	Tin Plating	-
Shell	Exterior Shell	Stainless	Tin Plating	-

Jul.1.2026 Copyright 2026 HIROSE ELECTRIC CO., LTD. All Rights Reserved.

Product Number Structure

Refer to the chart below when determining the product specifications from the product number.
Please select from the product numbers listed in this catalog when placing orders.

■ Connector

DF56 C - # S - 0.3 V (##)
❶ ❷ ❸ ❹ ❺ ❻ ❼

DF56 - # P - SHL
❶ ❸ ❹ ❽

❶ Series Name	DF56	❺ Contact Pitch	0.3mm
❷ Shape Symbol	Receptacle C: Stand-off Type (No pattern prohibited area under connector) Blank: Standard (With pattern prohibited area under connector)	❻ Termination Type	V: Straight SMT SD: Micro-Coaxial Cable Plug
❸ No. of Pos.	C: Stand-off Type 26, 30, 40 Standard: 40, 50	❼ Packing Type	(51): Embossed Tape Packaging
❹ Connector Type	S: Receptacle P: Plug	❽ Mounting Parts	SHL: Exterior Shell

Combinations

[Standard Use]

DF56-#S-0.3V(##) ＋ DF56-#P-ASSY [DF56-#P-0.3SD(##) ＋ DF56-#P-SHL]

Note 1 : The product specification of the above combination is shown on "Product Specifications".
Note 2 : ASSY means a harness item.

Jul.1.2026 Copyright 2026 HIROSE ELECTRIC CO., LTD. All Rights Reserved.

Receptacle (SMT)

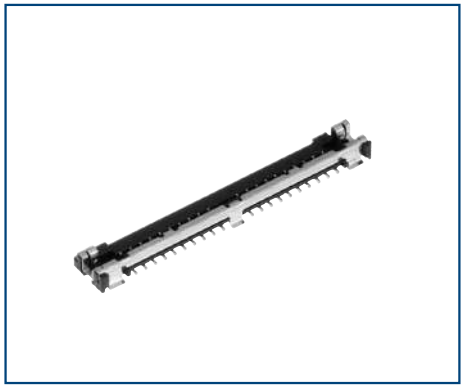

●40pos.

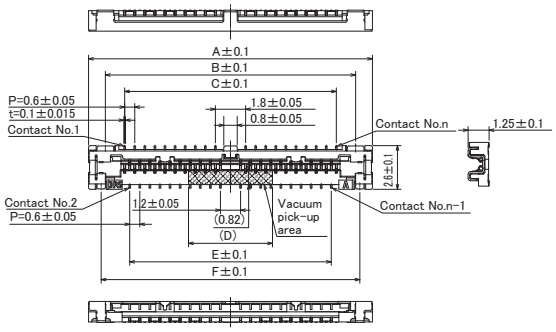

●50pos.

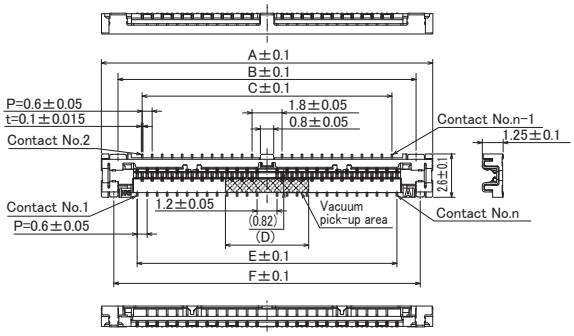

Note : The position of contact No.1 is different depending on No. of positions.

Unit : mm

Part No.	HRS No.	No. of Pos.	A	B	C	D	E	F	Purchase Unit (##) : (51)
DF56-40S-0.3V(##)	CL0662-5600-0-##	40	16.90	14.90	12.60	(5.00)	12.00	15.40	5,000pcs per reel
DF56-50S-0.3V(##)	CL0662-5606-7-##	50	19.90	17.90	15.00	(5.00)	15.60	18.40	

Jul.1.2026 Copyright 2026 HIROSE ELECTRIC CO., LTD. All Rights Reserved.

Receptacle (SMT)……Stand-off Type

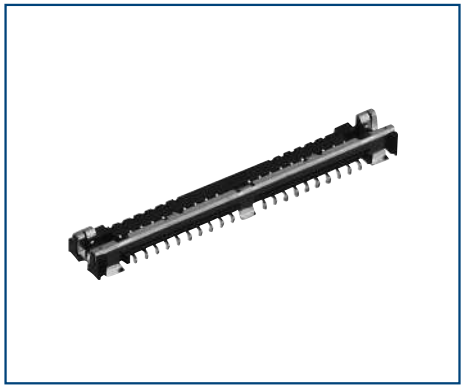

●26pos. / 30pos. / 50pos.

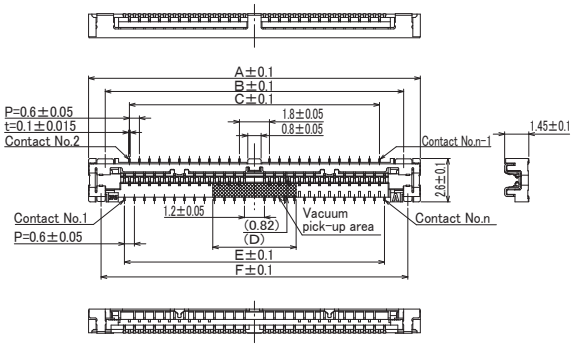

●40pos.

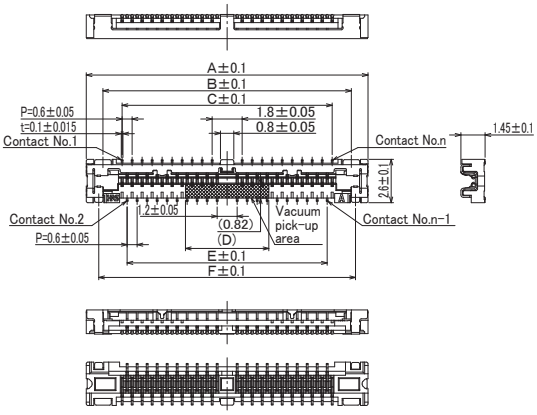

Note : The position of contact No.1 is different depending on No. of positions.

Unit : mm

Part No.	HRS No.	No. of Pos.	A	B	C	D	E	F	Purchase Unit (##) : (51)
DF56C-26S-0.3V(##)	CL0662-5603-9-##	26	12.7	10.7	7.8	(5.00)	8.4	11.2	5,000pcs per reel
DF56C-30S-0.3V(##)	CL0662-5616-0-##	30	13.9	11.9	9.0	(5.00)	9.6	12.4	
DF56C-40S-0.3V(##)	CL0662-5619-9-##	40	16.9	14.9	12.6	(5.00)	12.0	15.4	
DF56C-50S-0.3V(##)	CL0662-5624-9-##	50	19.9	17.9	15.0	(5.00)	15.6	18.4	

Jul.1.2026 Copyright 2026 HIROSE ELECTRIC CO., LTD. All Rights Reserved.

Plug

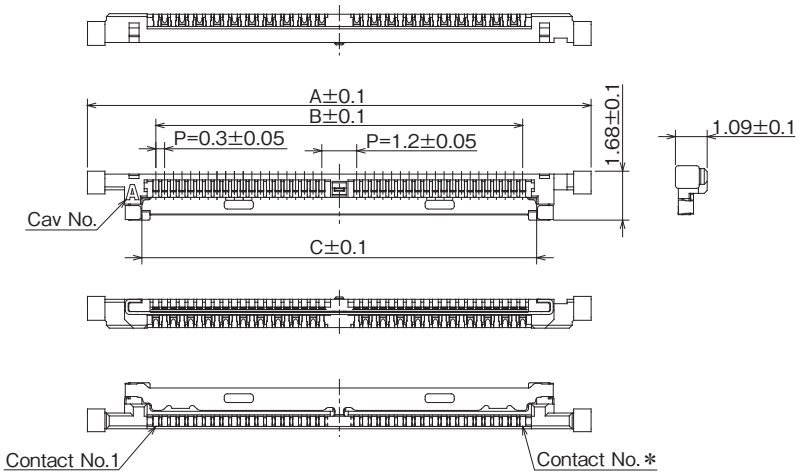

● Standard Type

Unit : mm

Part No.	HRS No.	No. of Pos.	A	B	C	D	Purchase Unit (##) : (51)
DF56-30P-0.3SD(##)	CL0662-5617-3-##	30	14.30	9.60	10.56	10.40	10,000pcs per reel
DF56-40P-0.3SD(##)	CL0662-5601-3-##	40	17.30	12.60	13.56	13.40	
DF56-50P-0.3SD(##)	CL0662-5607-0-##	50	20.30	15.60	16.56	16.40	

Note : The exterior shell (DF56-#P-SHL) is required for micro coaxial cable termination

● The Type of Emphasis for Operation (A part in a different)

Unit : mm

Part No.	HRS No.	No. of Pos.	A	B	C	D	Purchase Unit (##) : (51)
DF56L-26P-0.3SD(##)	CL0662-5623-6-##	26	13.50	8.40	9.36	9.20	10,000pcs per reel

■ Recommended Micro Coaxial Cable Preparation

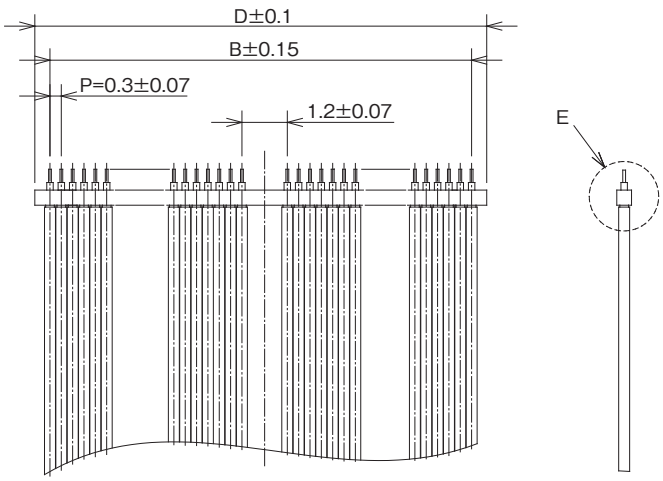

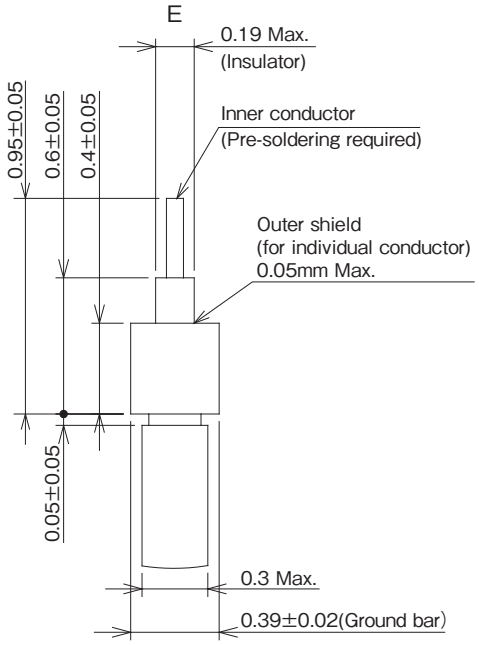

Note : Pre-soldering (lead-free) is required for center conductor.

Jul.1.2026 Copyright 2026 HIROSE ELECTRIC CO., LTD. All Rights Reserved.

Exterior Shell

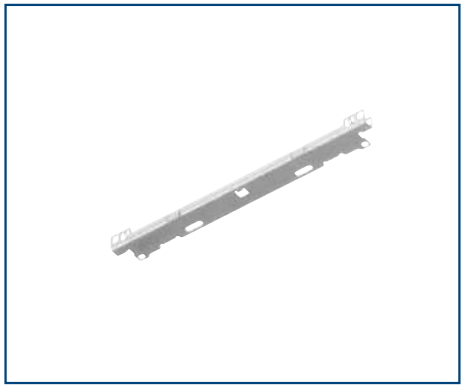

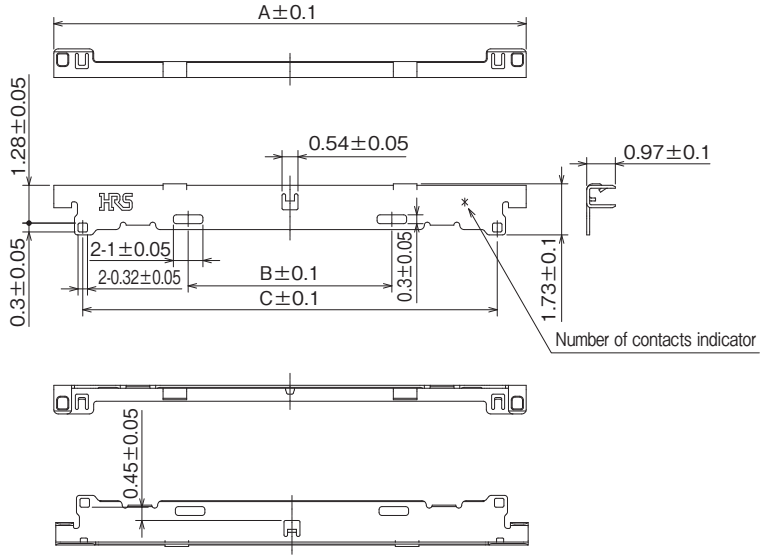

Unit : mm

Part No.	HRS No.	No. of Pos.	A	B	C	Purchase Unit
DF56-26P-SHL	CL0662-5605-4-00	26	11.80	3.90	9.84	10,000pcs per reel
DF56-30P-SHL	CL0662-5618-6-00	30	13.00	3.90	11.04	
DF56-40P-SHL	CL0662-5602-6-00	40	16.00	6.90	14.04	
DF56-50P-SHL	CL0662-5608-2-00	50	19.00	7.50	17.04	

Jul.1.2026 Copyright 2026 HIROSE ELECTRIC CO., LTD. All Rights Reserved.

Recommended PCB Mounting Pattern

[Standard Type]

●40pos.

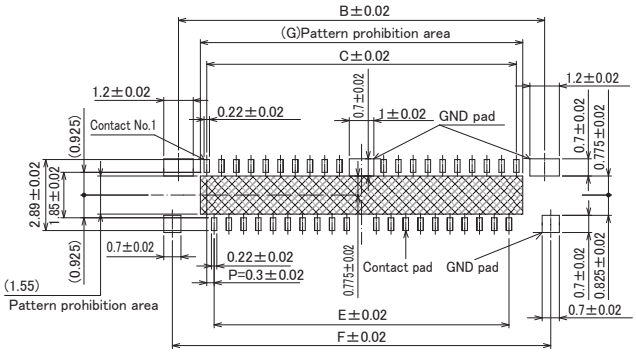

●50pos.

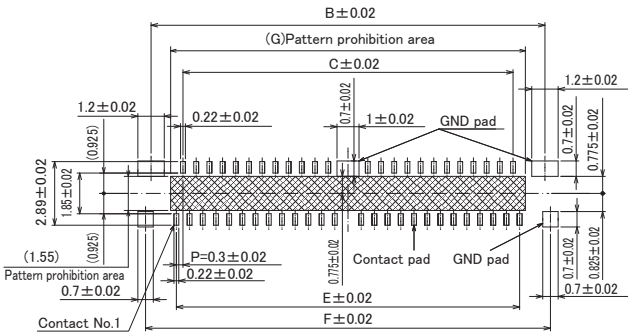

Note : The position of contact No.1 is different depending on No. of positions.

Unit : mm

Part No.	HRS No.	No. of Pos.	B	C	E	F	G
DF56-40S-0.3V(##)	CL0662-5600-0-##	40	14.90	12.60	12.00	15.40	13.12
DF56-50S-0.3V(##)	CL0662-5606-7-##	50	17.90	15.00	15.60	18.40	16.12

【Specification Number】
(51) : Embossed Package (5,000pcs per reel)

[Stand-off Type]

●26pos. / 30pos. / 50pos.

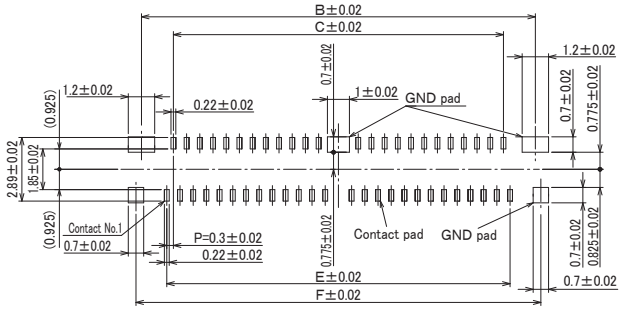

●40pos.

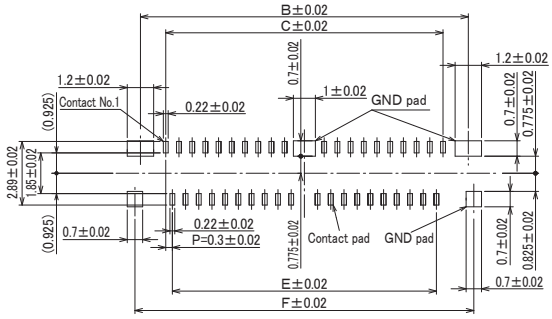

Note : The position of contact No.1 is different depending on No. of positions.

Unit : mm

Part No.	HRS No.	No. of Pos.	B	C	E	F
DF56C-26S-0.3V(##)	CL0662-5603-9-##	26	10.7	7.8	8.4	11.2
DF56C-30S-0.3V(##)	CL0662-5616-0-##	30	11.9	9.0	9.6	12.4
DF56C-40S-0.3V(##)	CL0662-5619-9-##	40	14.9	12.6	12.0	15.4
DF56C-50S-0.3V(##)	CL0662-5624-9-##	50	17.9	15.0	15.6	18.4

【Specification Number】
(51) : Embossed Package (5,000pcs per reel)

Jul.1.2026 Copyright 2026 HIROSE ELECTRIC CO., LTD. All Rights Reserved.

Packaging Specifications (Complies with IEC 60286-3, JIS C 0806)

Receptacle (Standard Type)

● Embossed Carrier Tape Dimensions

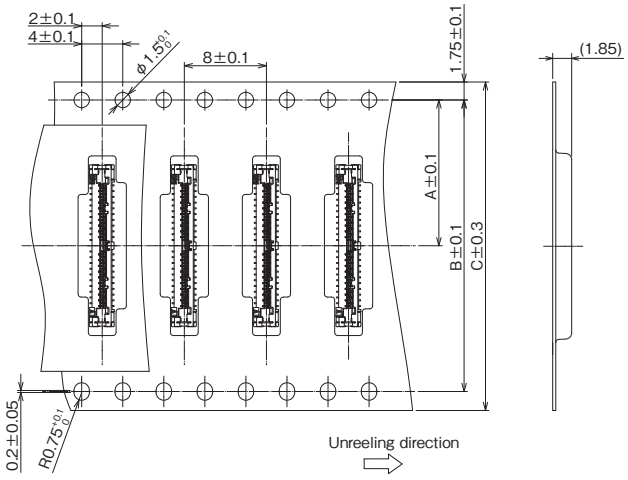

● Reel Dimensions

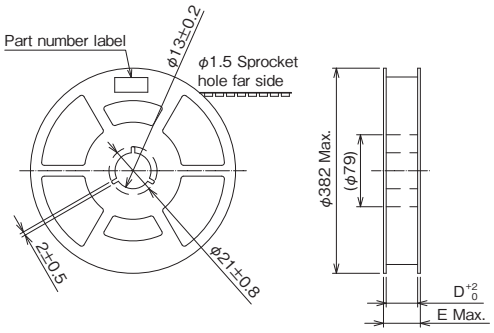

Unit : mm

Part No.	HRS No.	No. of Pos.	A	B	C	D	E
DF56-40S-0.3V(##)	CL0662-5600-0-##	40	14.2	28.4	32.0	32.4	38.4
DF56-50S-0.3V(##)	CL0662-5606-7-##	50	14.2	28.4	32.0	32.4	38.4

Note : When the number of contacts is 30 or less, the feed holes are only on one side of the tape. (Top of figure φ 1.5 hole only)

Jul.1.2026 Copyright 2026 HIROSE ELECTRIC CO., LTD. All Rights Reserved.

Receptacle (Stand-off Type)

● Embossed Carrier Tape Dimensions

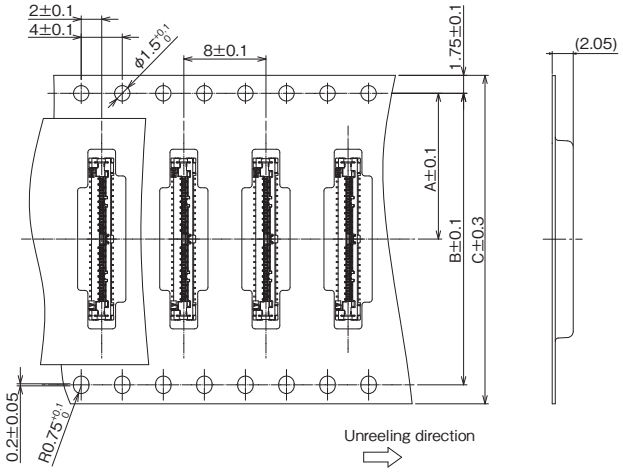

● Reel Dimensions

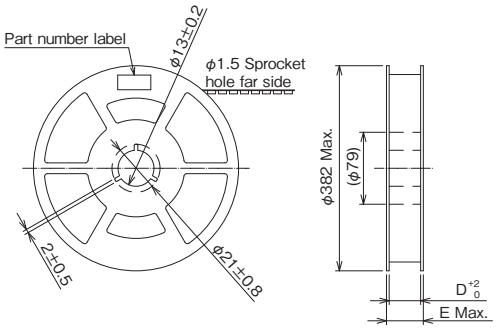

Unit : mm

Part No.	HRS No.	No. of Pos.	A	B	C	D	E
DF56C-26S-0.3V(##)	CL0662-5603-9-##	26	11.5	–	24.0	24.4	30.4
DF56C-30S-0.3V(##)	CL0662-5616-0-##	30	11.5	–	24.0	24.4	30.4
DF56C-40S-0.3V(##)	CL0662-5619-9-##	40	14.2	28.4	32.0	32.4	38.4
DF56C-50S-0.3V(##)	CL0662-5624-9-##	50	14.2	28.4	32.0	32.4	38.4

Note : When the number of contacts is 30 or less, the feed holes are only on one side of the tape. (Top of figure ϕ 1.5 hole only)

Jul.1.2026 Copyright 2026 HIROSE ELECTRIC CO., LTD. All Rights Reserved.

Plug

● Embossed Carrier Tape Dimensions

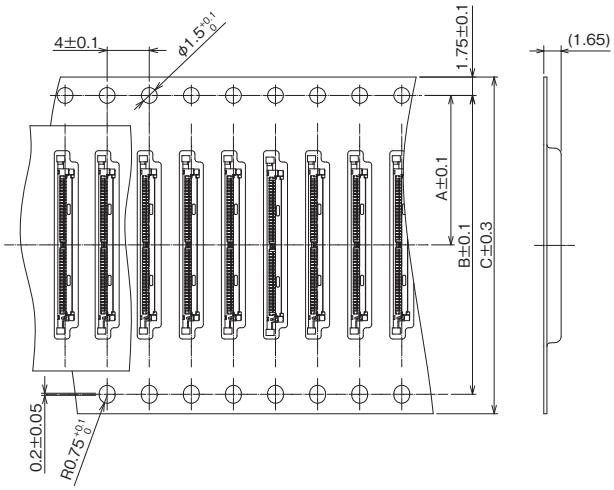

● Reel Dimensions

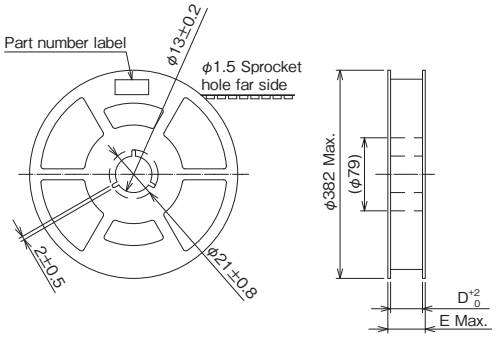

Unit : mm

Part No.	HRS No.	No. of Pos.	A	B	C	D	E
DF56-30P-0.3SD(##)	CL0662-5617-3-##	30	14.2	28.4	32.0	32.4	38.4
DF56-40P-0.3SD(##)	CL0662-5601-3-##	40	14.2	28.4	32.0	32.4	38.4
DF56-50P-0.3SD(##)	CL0662-5607-0-##	50	14.2	28.4	32.0	32.4	38.4

Extraction Tool

For details about the extraction tool, please contact your Hirose sales representative.

Jul.1.2026 Copyright 2026 HIROSE ELECTRIC CO., LTD. All Rights Reserved.

Temperature Profile

1. Recommended temperature profile (Lead-free for mounting)	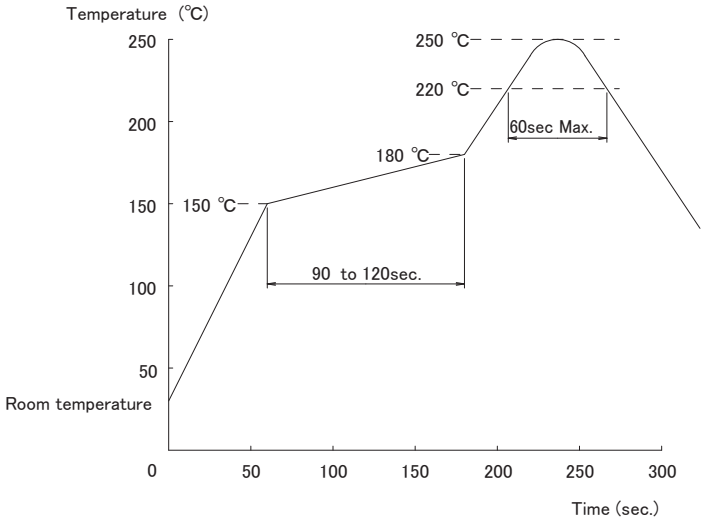 Applicable Conditions 1.Peak Temperature : 250℃ Max. 2.Heating : 220℃ Min. for 60 seconds Max. 3.Pre-heating : 150 to 180℃ for 90 to 120 seconds. 4.Number of cycles : Up to 2 cycles *Solder composition : Sn-3Ag-0.5Cu Note : Values in this temperature profile are one of the recommendations.
2. Recommended manual soldering	Temperature of the soldering iron : 350℃ Max. Soldering time : 3 seconds Max.
3. Recommended screen thickness and open area ratio (Pattern area ratio)	Standard thickness 0.1mm C : Stand-off Type Opening ratio : Lead 100%, ground 100% None : Standard Type Opening ratio : Lead 60%, ground 100%
4. Board warpage	Maximum of 0.02mm at the connector center, with both ends of the connector as reference points.
5. Cleaning conditions	Cleaning is not recommended. If you clean this product, please evaluate its performance before using it. (Cleaning may impair the mating/unmating properties and lower resistance to environmental factors.)

Jul.1.2026 Copyright 2026 HIROSE ELECTRIC CO., LTD. All Rights Reserved.

Jul.1.2026 Copyright 2026 HIROSE ELECTRIC CO., LTD. All Rights Reserved.

Connector Operation and Precautions

Mating

Mate the plug with receptacle by pressing straight against the entire plug surface.
Do NOT mate the plug while holding by the teminated cable.

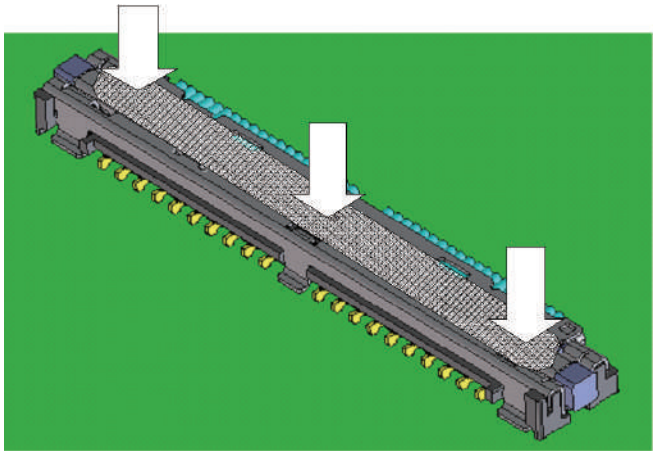

Un-Mating

Use a dedicated extraction tool, pull directly upward as shown in the diagram below.
Extraction from only one side will result in damage to the connector so it is recommend to extract from both sides.
Please refrain from holding the cable while extracting as it may result in cable disconnection or connector damage.

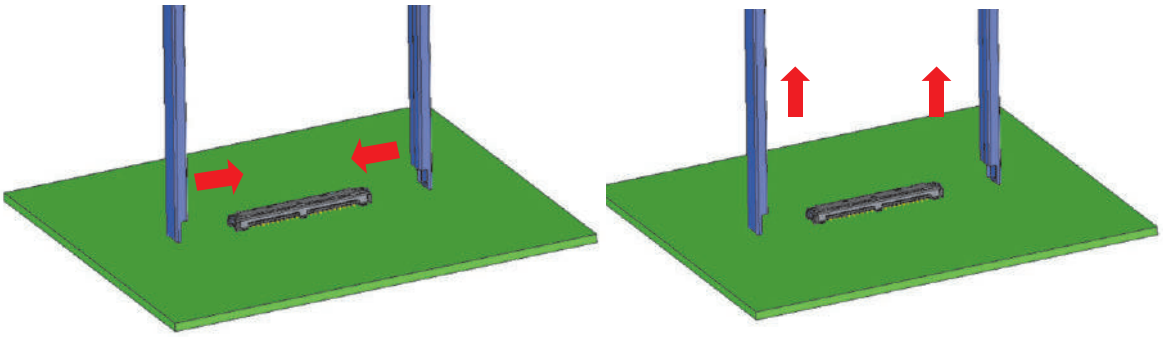

Note 1 : Do not mate / un-mate the connectors when receptacle is not mounted on the board.
Note 2 : Excessive scoop insertion or extraction may result in damage.
Note 3 : In the manual soldering process, don't carry out the flux coating which will cause a flux blister on the connector.

While Taking into Consideration

Specifications mentioned in this catalog are reference values.
When considering to order or use this product, please review the Drawing and Product Specifications sheets.
Use an appropriate cable when using the connector in combination with cables.
If considering usage of a non-specified cable, please contact your sales representative.
If assembly process is done by jigs & tools which are not identified by Hirose, the warranty of the product may be affected.
If considering usage for below mentioned applications, please contact your sales representative.
In cases where the application will demand a high level of reliability, such as automotive, medical instruments, public infrastructure, aerospace/defense etc. Hirose must review before assurance of reliability can be given.

HIROSE ELECTRIC CO.,LTD. 2-6-3,Nakagawa Chuoh,Tsuzuki-Ku,Yokohama-Shi 224-8540,JAPAN
https://www.hirose.com

※The contents of this catalog are current as of date of 3/2025. Contents are subject to change without notice for the purpose of improvements.
※The HRS logo and "HIROSE" are trademarks of HIROSE ELECTRIC CO., LTD.