Reference Specification

Product Name: **GPL1005SKS1R0MT**

GOL Part Number: **Multilayer Metal Power Inductors**

Customer:

Halogen Free & RoHS Compliance

Customer Authorized Signature		
Approved By	Verified By	Checked By
Qualification Status:☐Full ☐Restricted ☐Rejected Date:		

HANG ZHOU GOL DEVICES Ltd			
Approved By	Checked By	Issued By	Customer Manager

Address:

Tel: Fax: E-Mail:

【Version change history】

Rev.	Effective Date	Changed Contents	Change reasons	Approved By
01	2025/09/26	New release	/	Dafu Lu

1. Scope

This reference specification applies to Multilayer Metal Power Inductors GPL series for general electronic equipment.

2. Part Number

G	P	L	1005	SK	S	1R0	M	T
①	②	③	④	⑤	⑥	⑦	⑧	⑨

①	
Code	Campany
G	GOL

②	
Code	Category
P	Power

③	
Code	Type
L	L-shape electrode

④	
Code	Dimensions（L×W mm）
1005	1.0×0.5

⑤	
Code	Thickness（mm）
SK	0.60

⑥	
Code	Category
S	Inner Code

*R=decimal point

⑦	
Code	Norminal inductance（μH）
1R0	1.0

⑧	
Code	Inductance tolerance
M	20%

⑨	
Code	Packaging
T	Taping

3. Electrical Characteristics

Operating Temperature range: –40℃ to +125℃（Including self-generated heat）
Storage Temperature range: –5℃ to +40℃ （Recommended storage conditions: Ambient temperature: 30℃ or below，Humidity: 30% to 70% RH）

GOL Part Number	L Test Freq	Inductance		Isat		Irms		DCR	
		L	Tolerance	max.	typ.	max.	typ.	max.	typ.
Unit	MHz	uH	/	A	A	A	A	mΩ	mΩ
GPL1005SKS1R0MT	1	1.0	M/N	1.0	1.2	0.8	0.9	300	250

* The saturation current value (Isat) is the maximum DC current value at which the inductance decreases down to 30% (at 20℃).
* The temperature rise current value (Irms) is the maximum DC current value at which the temperature increases up to 40℃ (at 20℃).
* The rated current value follows either Isat or Irms, whichever is lower.
* Absolute maximum voltage: 10V

4. Testing Conditions

Unless otherwise specified	Temperature: ordinary temperature (15°C to 35°C) Humidity: ordinary humidity [25% to 85% (RH)]
In case of doubt	Temperature: 20°C±2°C Humidity: 60% to 70% (RH) Atmospheric pressure: 86 kPa to 106 kPa

5. Appearance and Dimensions

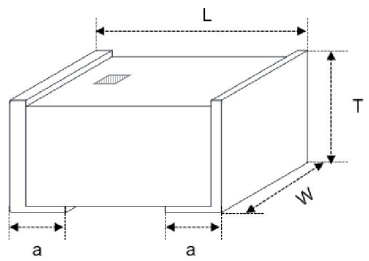

	Dimension [mm]			
Iterm	L（mm）	W（mm）	T（mm）	a（mm）
1005SK	1.0±0.2	0.5±0.2	0.60 MAX	0.25±0.15

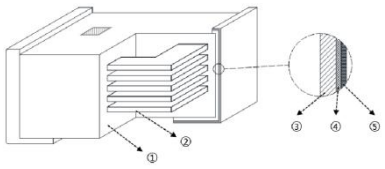

	Name	Material
①	Chip body	Metal magnetics
②	Internal coil	Ag
③	Terminal Electrodes (Base)	Ag
④	Terminal Electrodes (Plating)	Ni
⑤	Terminal Electrodes (Surface)	Sn

6. Electrical Performance

No.	Item	Specification	Test method
6.1	Inductance	Meet chapter 3 ratings.	Inductance shall be measured at 1MHz. Measuring equipment: E4991B (or equivalent equipment) Measuring OSC level: 0.5V Measuring jig: 16197A (or equivalent equipment)
6.2	DC resistance	Meet chapter 3 ratings.	Measuring equipment: digital multimeter
6.3	Definition of Rated Current	Meet chapter 3 ratings.	Inductance decrease within 30％ and temperature rise in an element within 40℃ by the application of direct current

7. Mechanical And Environmental Performance

No.	Item	Specification	Test method
7.1	Terminal Strength	No significant mechanical damage or no sign of electrode peeling off shall be observed.	Test samples shall be soldered to test boards. A force shall be applied in vertically downward direction with a R 0.5 fixture for 10 seconds. 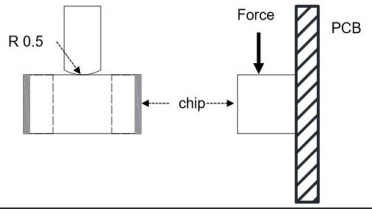 Type: 1005, Force: 5N
7.2	Bending Strength	No significant mechanical damage or no sign of electrode peeling off shall be observed.	Test samples shall be soldered to test boards. A force shall be applied in a downward direction until amount of deflection reaches 2mm. Test board dimension: 100×40×0.8mm Test board material: Glass epoxy 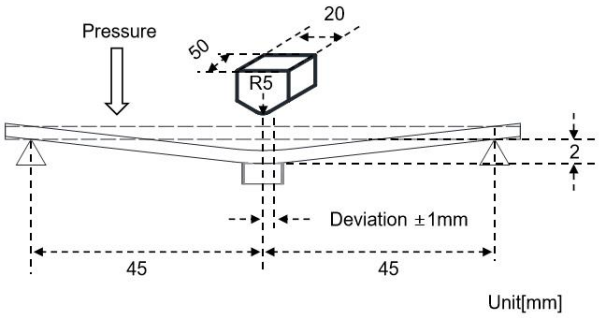
7.3	Vibration	Appearance shall have no significant mechanical damage. Inductance change rate: within ±10%	Test samples shall be vibrated under the following conditions: - Frequency range: 10Hz to 55Hz - Overall amplitude: 1.5mm - Sweeping method: 10Hz - 55Hz - 10Hz for 1 minute - 2 hours each in X, Y, Z directions: 6 hours in total
7.4	Solderability	90% or more of the outer electrode shall be covered with new solder seamlessly.	Test samples shall be immersed into flux. Test samples shall be immersed into molten solder under the conditions shown in the tables below, then taken out and checked visually. The speed of immersion and taking out shall be 25mm/s. Solder: Sn/3.0Ag/0.5Cu Solder temperature: 245℃±5℃ Immersion time: 4s±1s

<table>
<tr><td>7.5</td><td>Resistance to soldering heat</td><td>Appearance: No significant mechanical damage shall be observed.
Inductance change rate: within ±10%</td><td>Test samples shall be immersed into flux. Preheating as shown in the table below shall be conducted.
Test samples shall be immersed into molten solder under the conditions shown in the table below and taken out. The speed of immersion and taking out shall be 25mm/s. Test samples shall be kept at ambient temperature for 2 or 3 hours (See Note 1) before measurement.
<table>
<tr><td>Preheating</td><td>150℃,3min</td></tr>
<tr><td>Solder temperature</td><td>260℃±5℃</td></tr>
<tr><td>Immersion time</td><td>10s±1s</td></tr>
</table></td></tr>
<tr><td>7.6</td><td>Thermal Shock</td><td>Appearance: No significant mechanical damage shall be observed.
Inductance change rate: within ±10%</td><td>Test samples shall be exposed to steps 1 to 4 shown in the table below as one cycle. The test should be repeated for 100 times.
Test samples shall be kept at normal temperature and normal humidity for 2 to 3 hours before measurement.
<table>
<tr><td>Step</td><td>Temperature</td><td>Time</td></tr>
<tr><td>1</td><td>$-40℃^{+0}_{-3}℃$</td><td>30min.±3min.</td></tr>
<tr><td>2</td><td>Normal temp.</td><td>2min. To 3min.</td></tr>
<tr><td>3</td><td>$+85℃^{+3}_{-0}℃$</td><td>30min.±3min.</td></tr>
<tr><td>4</td><td>Normal temp.</td><td>2min. To 3min.</td></tr>
</table></td></tr>
<tr><td>7.7</td><td>Resistance to Humidity</td><td>Appearance: No significant mechanical damage shall be observed.
Inductance change rate: within ±10%</td><td>Test samples shall be kept in an atmosphere at temperature and humidity of 60℃±2℃ and 90 to 95%RH for 500 +24/-0 hours.
Test samples shall be kept at normal temperature and normal humidity for 2 to 3 hours before measurement. (See Note 1)</td></tr>
<tr><td>7.8</td><td>High Temperature Load Life Test</td><td>Appearance: No significant mechanical damage shall be observed.
Inductance change rate: within ±10%</td><td>Test samples shall be kept in an atmosphere at temperature of 85℃±2℃ for 500 +24/-0 hours while the rated current (Irms(max)) is continuously applied. Test samples shall be kept at normal temperature and normal humidity for 2 to 3 hours before measurement. (See Note 1)</td></tr>
<tr><td>7.9</td><td>Humidity Resistance Load Life Test</td><td>Appearance: No significant mechanical damage shall be observed.
Inductance change rate: within ±10%</td><td>Test samples shall be kept in an atmosphere at temperature and humidity of 60℃±2℃ and 90 to 95%RH for 500 +24/-0 hours while the rated current (Irms(max)) is continuously applied. Test samples shall be kept at normal temperature and normal humidity for 2 to 3 hours before measurement. (See Note 1)</td></tr>
</table>

(Note 1) If any doubt arises in the result of measurement, another measurement shall be conducted after leaving test samples to stand for 48±2 hours.

8. Specification of Packaging

8.1 Taping specifications

Type	Packing quantity (Standard quantity)
1005SK	10000/reel

8.2 Appearance and dimensions of tape

8.2.1 8 mm width/paper tape(F:4mm)

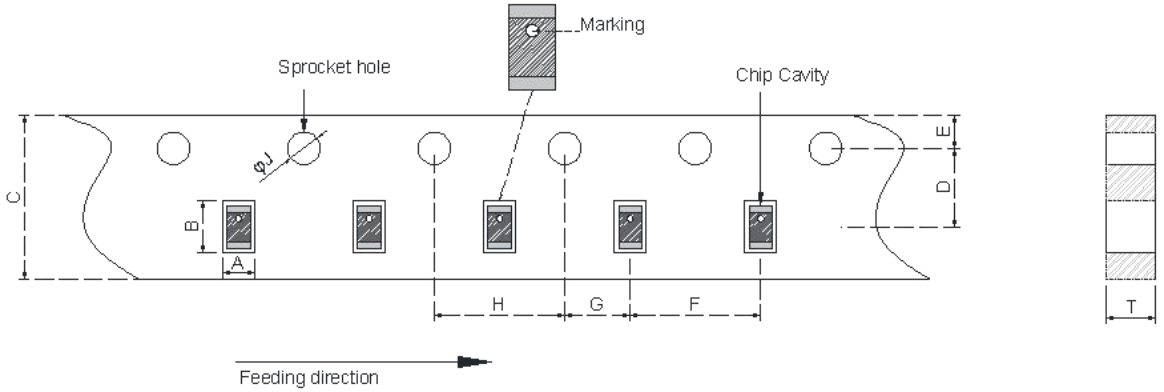

Unit[mm]

Type	A	B	C	D	E	F	G	H	φJ	t
1005SK	0.8±0.1	1.3±0.1	8.0±0.2	3.5±0.05	1.75±0.1	2.0±0.05	2.0±0.05	4.0±0.1	$1.5^{+0.1}_{-0}$	0.65max

※A, B, t: Sufficient clearance

8.2.2 Reel Dimensions(Unit: mm)

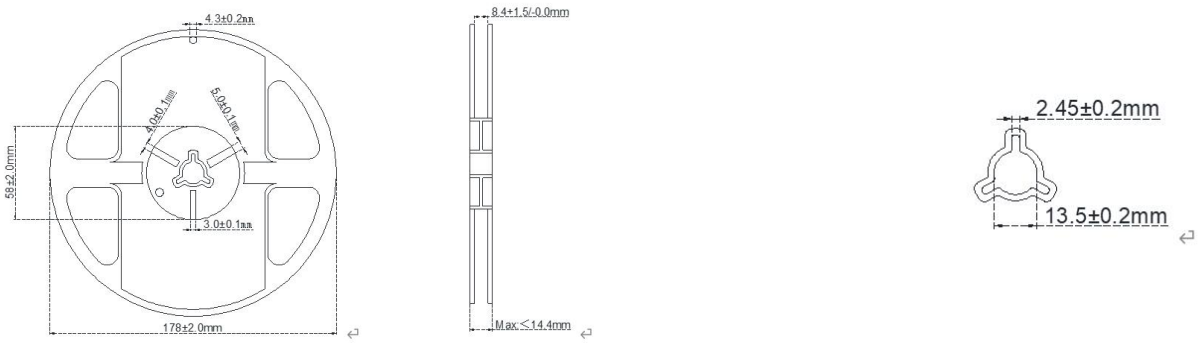

9. Caution

The products in this specification are only applicable to general electronic equipment. The products have not been verified for the following applications, please contact us in advance if you want to use it for the following applications. These applications require particularly high reliability in order to prevent defects which may directly cause damage to the third party's life, body or property. Please understand that we will not be liable for any damage or liability resulting from the use of the products in the following applications.

①Aircraft equipment ②Aerospace equipment ③Undersea equipment
④Atomic energy-related equipment ⑤Military equipment ⑥Medical equipment
⑦Traffic signal equipment ⑧Disaster prevention/crime prevention equipment
⑨Data-processing equipment ⑩Transportation equipment (vehicles, trains, ships, etc.)
⑪Applications of similar complexity and/or reliability requirements to the applications listed in the above

10. Precautions for Use

① Pre-heating should be in such a way that the temperature difference between solder and product surface is limited to 150°C max.

② Cooling into solvent after soldering also should be in such a way that the temperature difference is limited to 100°C max.

③ Insufficient pre-heating may cause cracks on the product, resulting in the deterioration of product quality.

④ Do not perform reworking with a soldering iron on this product.

10.1 Land dimensions

The following diagram shows the recommended land dimensions for reflow soldering:

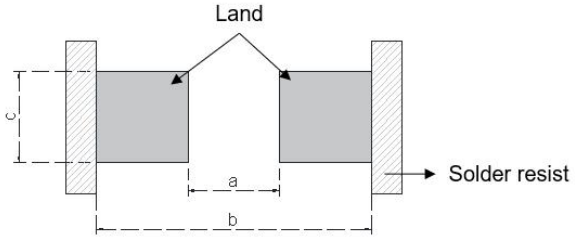

	a	b	c
1005	0.5	1.3	0.7

10.2 Flux and solder used

① Use a rosin-based flux.
② Do not use a highly acidic flux with a halide content exceeding 0.2(wt)% (chlorine conversion value).
③ Do not use a water-soluble flux.
④ Use Sn-3.0Ag-0.5Cu solder.
⑤ Standard thickness of solder paste: 100 μm to 150 μm

10.3 Soldering conditions (reflow)

	Profile
Pre-heating	150℃ to 180℃ 90s±30s
Heating	Above 217℃ 60s to 90s
Max temp	260℃
Number of reflow cycles	2 times

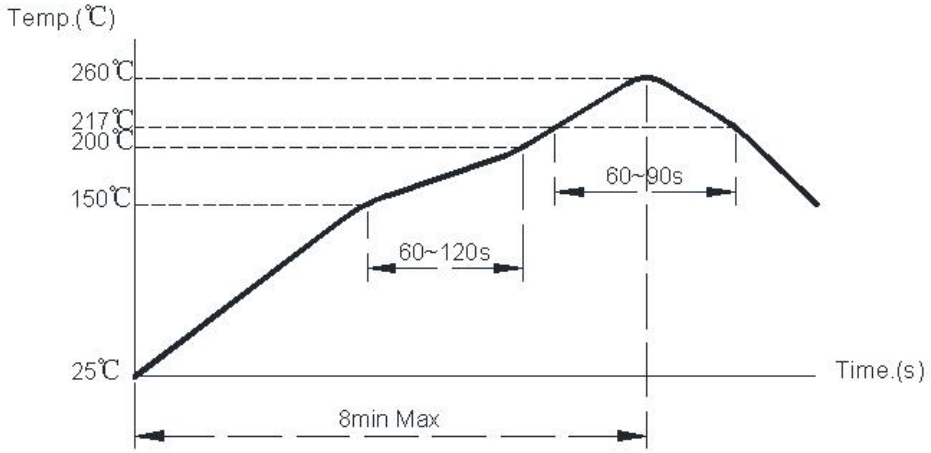

Storage period：Use the product within 12 months after delivery. If you do not use the product for more than 12 months, check solderability before using it.

10.4 Reworking with soldering iron

Item	Requirement
Pre-heating	150°C/approx. 1 min
Tip temperature of soldering iron	350°C max.
Power consumption of soldering iron	80 W max.
Tip diameter of soldering iron	ø3 mm max
Soldering time	3 s (+1 s, -0 s)
Number of reworking operations	2 times max.

*Avoid touching the tip of the soldering iron directly to the chip, as this operation may crack the chip due to thermal stress.

11. Note

Please make sure that your product has been evaluated in view of your specifications with our product being mounted to your product.
You are requested not to use our product deviating from the reference specifications.
The contents of this reference specification are subject to change without advance notice. Please approve our product specifications or transact the approval sheet for product specifications before ordering.