RoHS	Compliant	Pb	HF

REV.	ECN NO.	DESCRIPTION	DRWN	APPD	DATE

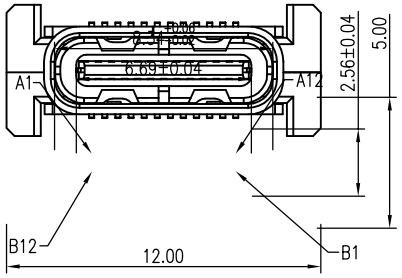

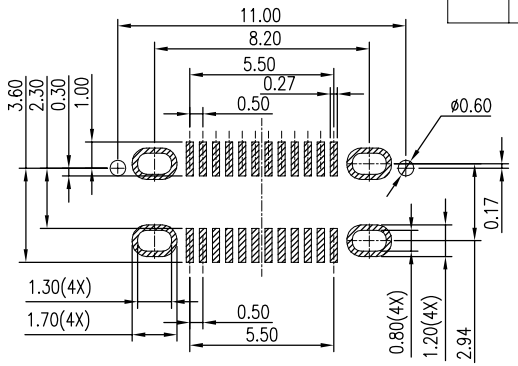

RECOMMENDED PCB LAYOUT(TOP VIEW)

THICKNESS 1.0±0.10MM;DEFAULT TOLERANCE:±0.05

NOTE:
1.MATERIAL SPECIFICATION:
1.HOUSING:PA9T,UL94 V-0.
2.TERMINAL: COPPER ALLOY
3.MID PLATE: STAINLESS STEEL
4.FRONT SHELL: STAINLESS STEEL
2.PLATING SPECIFICATION:
2-1.TERMINAL:
Ni 50u" MIN. UNDER PLATED OVER ALL.
Au PLATED ON THE FUNCTIONAL AREA OF CONTACT.
(GOLD PLATING THICKNESS FOLLOW THE P/N)
PLATING SPECIFICATIONS OF THE SOLDER AREA FOLLOW THE P/N
2-2.SHELL:
Ni 30u" MIN. UNDER PLATED OVER ALL.
2-3.MID PLATE:
CLEAR ONLY
3.MECHANICAL PERFORMANCE,
3-1.INSERTION FORCE: 0.5~2.0kgf.
3-2.REMOVAL FORCE: 0.8kgf~2.0kgf.
3-3.DURABILITY: 10000 CYCLES.
4.ELECTRICAL PERFORMANCE,
4-1. VOLTAGE RATING:5 V DC/AC (RMS. max)
CURRENT RATING:3A/5AMPS. FOR TOTAL VBUS/GND PINS;
1.25AMPS FOR CC PIN,0.25 AMPS. FOR ALL OTHER CONTACT.
4-2. LLCR:
VBUS & GND PINS AND OTHER PINS: 40mΩ/PIN MAX.
SHIELD: 50mΩ/MAX.
LLCR MAX. CHANGE OF ALL PINS: 10mΩ.
4-3.INSULATION RESISTANCE: 100MΩ MIN
4-4.DIELECTRIC WITHSTAND VOLTAGE,AC 100V FOR 1 MINUTE.
5. ENVIRONMENTAL PERFORMANCE:
OPERATING TEMPERATURE: -25°C~+85°C.
6.IR REFLOW:
THE PEAK TEMPERATURE ON THE BOARD SHALL
BE MAINTAINED FOR 10 SECONDS AT 260°C.

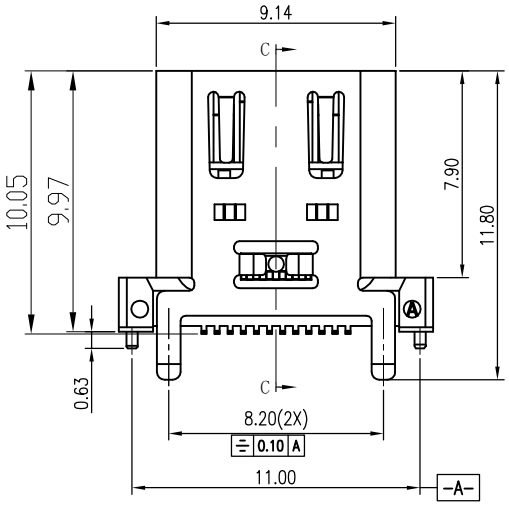

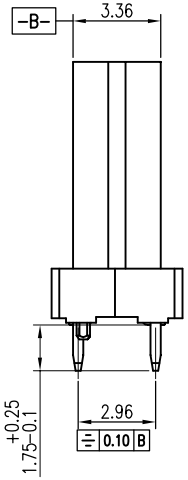

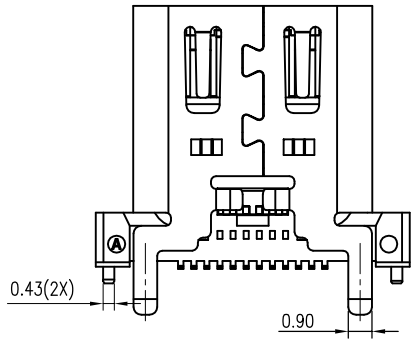

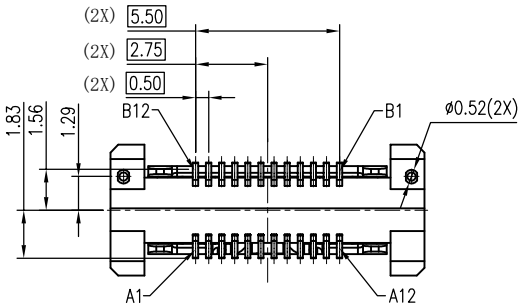

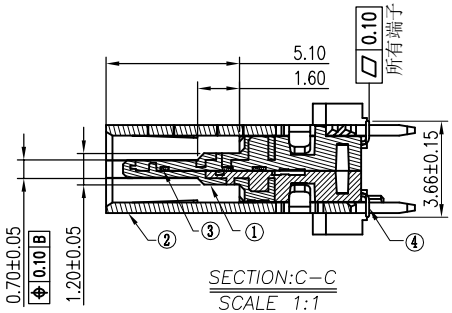

SECTION:C-C
SCALE 1:1

GENERAL TOLERANCE:	DATE: 2025.7.31	东莞市文章济美电子有限公司			
0. ±0.38 0.0 ±0.25 0.00 ±0.15 0.0° ±2°	DR.: Jeff PAN	TITLE: TYPE C直立24PIN			REV.: A0
	CHK.: Sunly				SHEET: 1of1
	APPD.: Mars	PART NO.: 5001-TYPEC24PLT-H9.97-B	UNITS: mm	SCALE: 1:1	SIZE: A4