Trench MOS Barrier Schottky Rectifier

Reverse Voltage - 150 V

Forward Current - 40 A

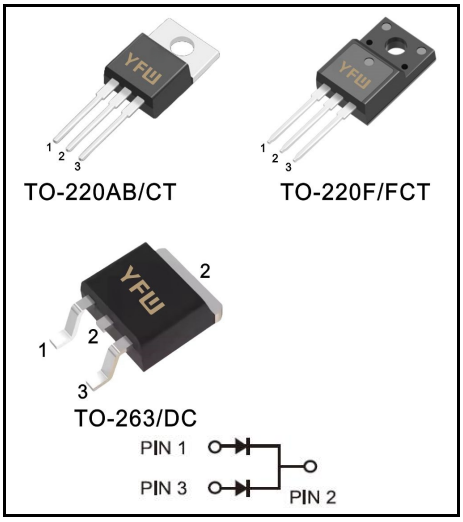

FEATURES

- Very low forward voltage
- High current capability
- High forward surge capability
- Low power losses，High efficiency
- Guarding for over voltage protection
- Lead free in comply with EU RoHS 2011/65/EU directives

MECHANICAL DATA

- Case: TO-220AB/CT TO-220F/FCT TO-263/DC
- Solder bath temperature275℃maximum,10s per JESD22-106

Primary Characteristic

I_o	2*20A
V_{RRM}	150V
I_{FSM}	250A
V_F	0.72V
T_J Max	175°C

Maximum Ratings (Per Leg) at Ta=25°C unless otherwise specified

Parameter		Symbols	Value	Units
Maximum Repetitive Peak Reverse Voltage		V_{RRM}	150	V
Maximum RMS voltage		V_{RMS}	105	V
Maximum DC Blocking Voltage		V_{DC}	150	V
Maximum Average Forward Rectified Current	Per Leg	I_o	20	A
	Total		40	
Peak Forward Surge Current, 8.3ms Single Half Sine-wave		I_{FSM}	250	A
Operating Temperature Range		T_J	-50 ~ +175	°C
Storage Temperature Range		T_{STG}	-50 ~ +175	°C
Typical Thermal Resistance (Note1) TO-220AB,TO-263 TO-220F		$R_{\theta JA}$/ $R_{\theta JC}$	2/4	°C/W

Note1: Thermal resistance from Junction to case per leg mounted on heatsink.

Electrical Characteristics (Per Leg) unless otherwise specified

Characteristics		Symbols	Value		Units
Forward Voltage Drop(Note2)		V_F	Typ	Max	V
at I_F=5A	TA=25°C		0.66	-	
	TA=125°C		0.55	-	
at I_F=10A	TA=25°C		0.75	0.82	
	TA=125°C		0.62	-	
at I_F=20A	TA=25°C		0.84	0.89	
	TA=125°C		0.72	-	
Maximum Reverse Current at V_R=150V	TA=25°C	I_R	0.6	5	uA
	TA=125°C		0.6	-	mA

Note2:Pulse test: 300 μs pulse width, 1 % duty cycle

RATINGS AND CHARACTERISTIC CURVES

FIG.1 MAXIMUM FORWARD CURRENT DERATING CURVE

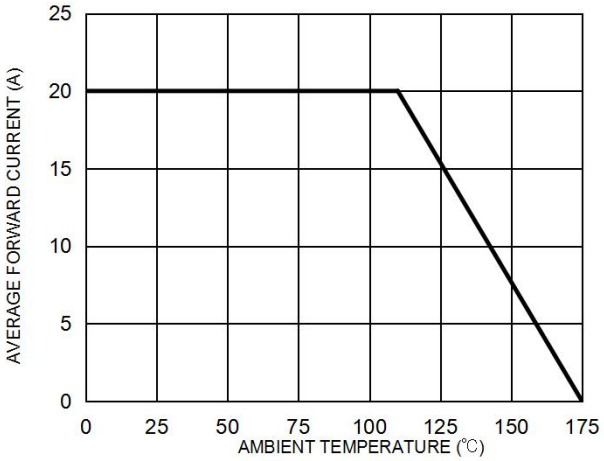

FIG. 2 MAXIMUM NON-REPETITIVE FORWARD SURGE CURRENT PER LEG

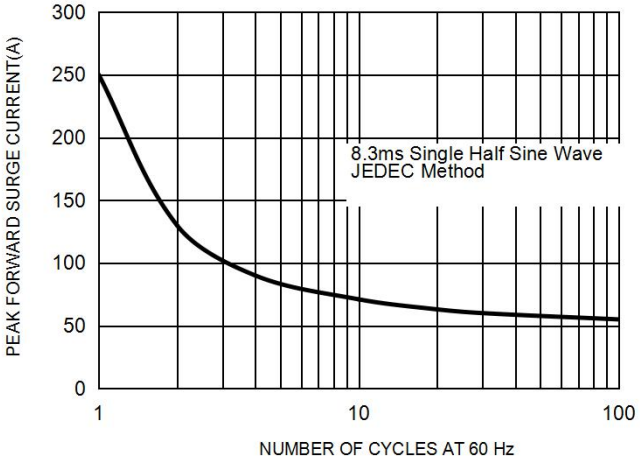

FIG. 3 TYPICAL FORWARD CHARACTERISTICS PER LEG

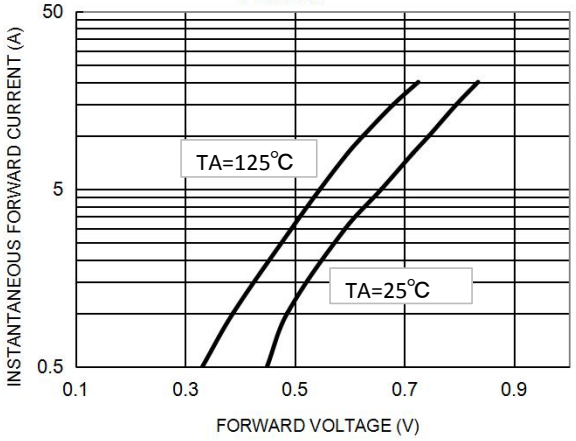

FIG. 4 TYPICAL REVERSE CHARACTERISTICS PER LEG

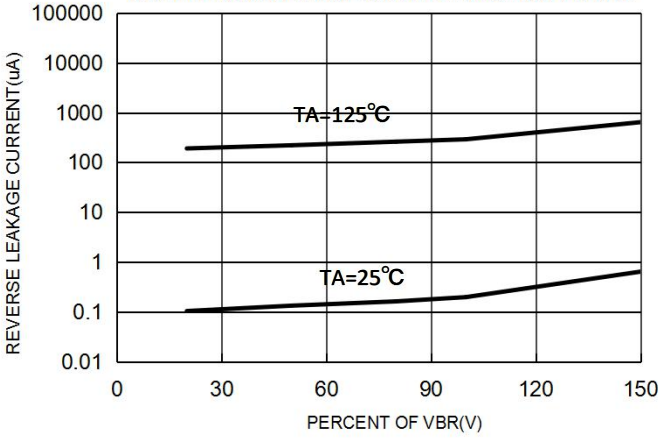

Marking Diagram

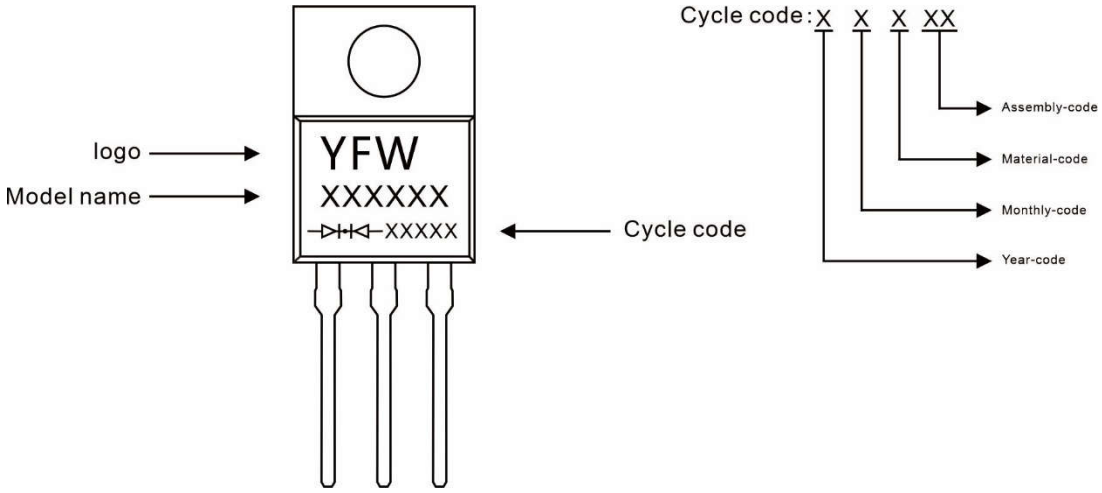

Ordering information

Model name	Package	Unit Weight	Base Quantity	Packing Quantity
HRT40L150CT	TO-220AB	0.07oz(1.96g)	50pcs/tube	1000PCS/Box 5000PCS/Carton

Package Dimensions

TO-220AB

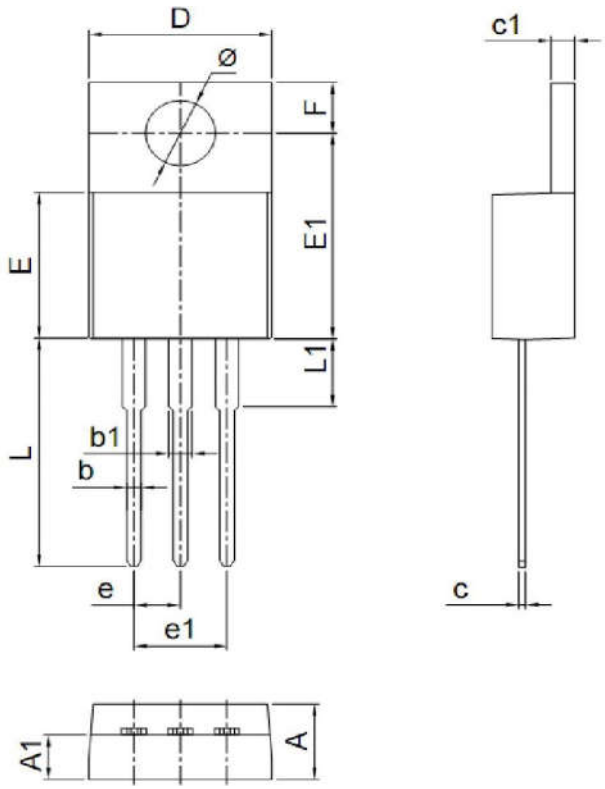

Symbol	Millimeter		Inches	
	Min.	Max.	Min.	Max.
A	4.30	4.70	0.169	0.185
A1	2.52	2.82	0.099	0.111
b	0.71	0.91	0.028	0.036
b1	1.17	1.37	0.046	0.054
c	0.30	0.50	0.012	0.020
c1	1.17	1.37	0.046	0.054
D	9.90	10.20	0.390	0.402
E	8.50	8.90	0.335	0.350
E1	12.00	12.50	0.472	0.492
e	2.44	2.64	0.096	0.104
e1	4.88	5.28	0.192	0.208
F	2.60	2.80	0.102	0.110
L	13.20	13.80	0.520	0.543
L1	3.80	4.20	0.150	0.165
Φ	3.60	3.96	0.142	0.156

Marking Diagram

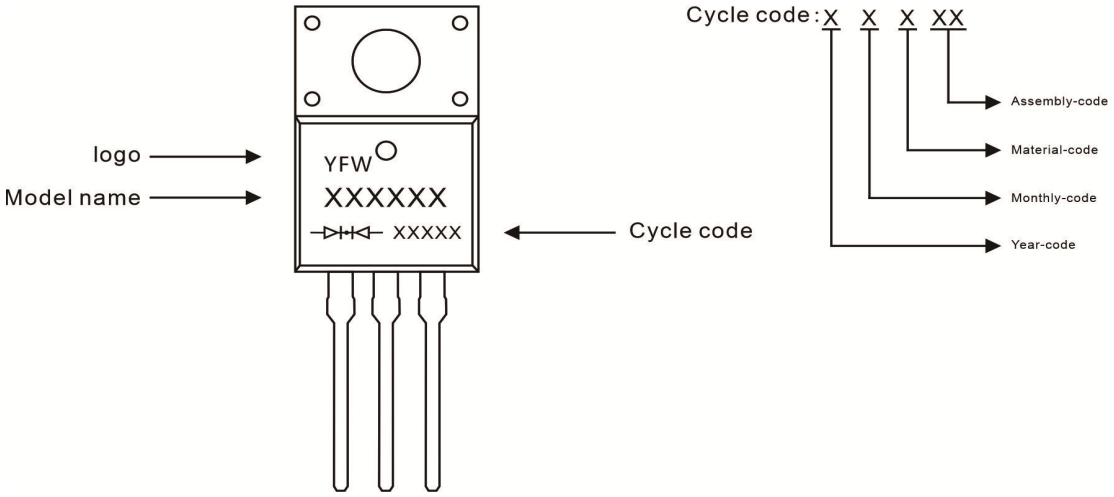

Ordering information

Model name	Package	Unit Weight	Base Quantity	Packing Quantity
HRT40L150FCT	TO-220F	0.06oz(1.74g)	50pcs/tube	1000PCS/Box 5000PCS/Carton

Package Dimensions

TO-220F

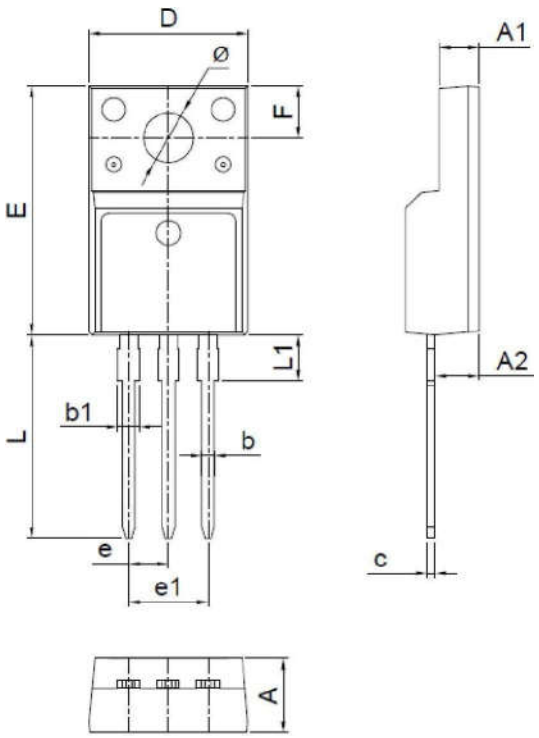

Symbol	Millimeter		Inches	
	Min.	Max.	Min.	Max.
A	4.50	4.90	0.177	0.193
A1	2.34	2.74	0.092	0.108
A2	2.66	2.86	0.105	0.113
b	0.75	0.85	0.030	0.033
b1	1.24	1.44	0.049	0.057
c	0.40	0.60	0.016	0.024
D	10.00	10.32	0.394	0.406
E	15.75	16.05	0.620	0.632
e	2.44	2.64	0.096	0.104
e1	4.88	5.28	0.192	0.208
F	3.10	3.5	0.122	0.138
L	13.50	13.90	0.531	0.547
L1	2.90	3.30	0.114	0.130
Φ	3.10	3.30	0.122	0.130

Marking Diagram

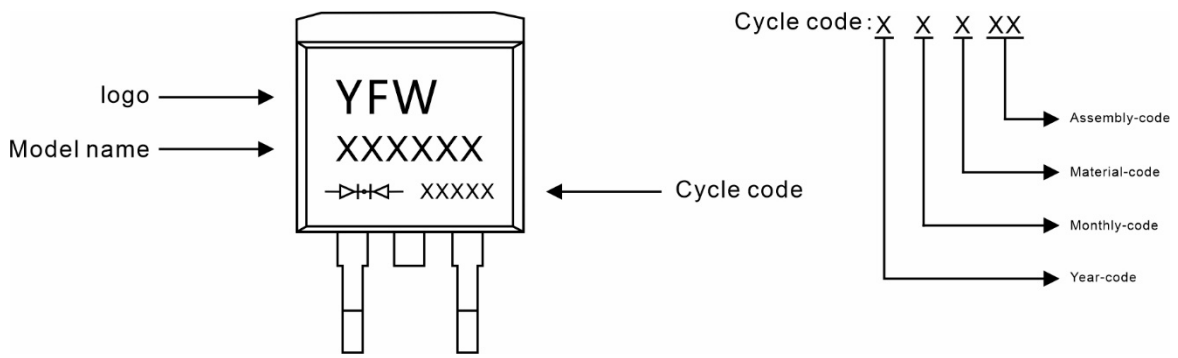

Ordering information

Model name	Package	Unit Weight	Base Quantity	Packing Quantity
HRT40L150DC	TO-263	0.04oz(1.16g)	800pcs/reel	1600pcs/box 8000pcs/Carton

Package Dimensions

TO-263

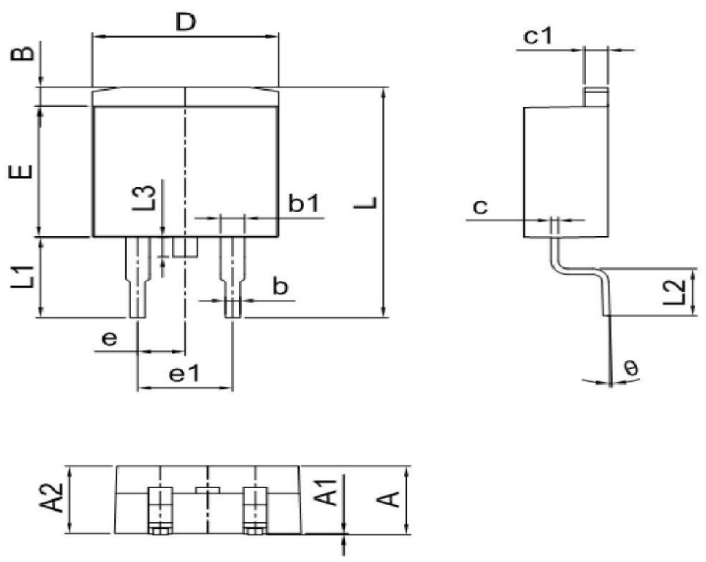

Dim	Millimeter		Inches	
	Min.	Max.	Min.	Max.
A	4.30	4.70	0.169	0.185
A1	0.00	0.15	0.000	0.006
A2	4.30	4.55	0.169	0.179
B	1.10	1.50	0.043	0.059
b	0.70	0.90	0.028	0.035
b1	1.20	1.50	0.047	0.059
c	0.30	0.60	0.012	0.024
c1	1.17	1.37	0.046	0.054
D	9.90	10.20	0.390	0.402
E	8.50	8.90	0.335	0.350
e	2.44	2.64	0.096	0.104
e1	4.88	5.28	0.192	0.208
L	15.00	15.30	0.591	0.602
L1	5.20	5.40	0.205	0.213
L2	2.40	2.60	0.094	0.102
L3	1.60	1.80	0.063	0.071

Disclaimer

The information presented in this document is for reference only. GuangDong Youfeng Microelectronics Co.,Ltd. reserves the right to make changes without notice for the specification of the products displayed herein to improve reliability, function or design or otherwise. The product listed herein is designed to be used with ordinary electronic equipment or devices, and not designed to be used with equipment or devices which require high level of reliability and the malfunction of with would directly endanger human life (such as medical instruments, transportation equipment, aerospace machinery, nuclear-reactor controllers, fuel controllers and other safety devices),YFW or anyone on its behalf, assumes no responsibility or liability for any damages resulting from such improper use of sale. This publication supersedes & replaces all information previously supplied. For additional information, please visit our website https://www.yfwdiode.com, or consult YFW sales office for further assistance.