SOREDE
索 瑞 達 電 子

深圳市索瑞达电子有限公司

承 认 书

SPECIFICATION FOR APPROVAL

客 户 名 称：
Customer Name :_____

客 户 料 号：
Customer P/N: _____

产 品 名 称：功率电感
Product Name:_____

索 瑞 达 料 号：SRVR.966411.YF系列
Sorede P/N: _____

制造厂商 Manufacturer	
拟 制 Draft	黄小香
审 核 Check	簿妃团
日 期 Date	2026-08-20

深圳市索瑞达电子有限公司 工程专用章

客户承认印章 Approval Signet	
日期 Date	

地址:深圳市观澜镇福城街道新塘村8号源创园陆号A6栋3楼.

Address:3Rd Floor, Building A6, Yuanchuangyuanlu, No. 8 Xintang Village, Fucheng Street, Guanlan Town, Shenzhen.

电话 Tel: 0755-29803356 传真 Fax: 0755-29803506

电子邮件 E-mail: sorde@vip.163.com

网址 http// www.szsorede.com

修 改 履 历 表

Modify Resume

修改日期 Date modified	修 改 明 细 Modify Details	修改后版本号 Version No.
2026-08-20	文件新制订 File formulation	A

1、外形尺寸 Dimension ：

单位Unit：mm

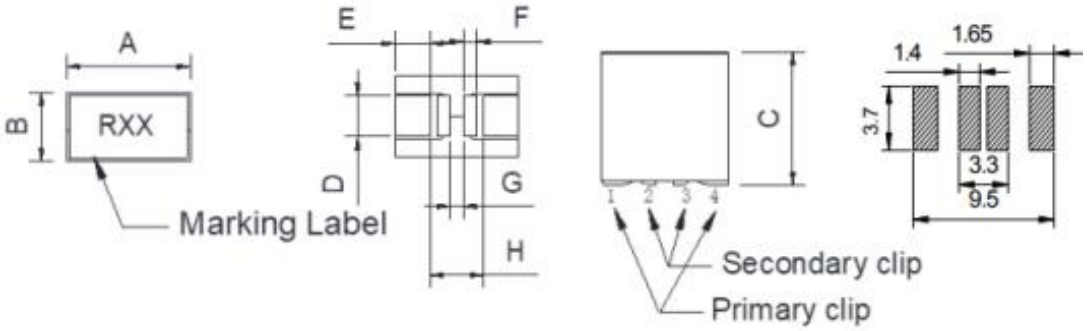

A	9.6Max
B	6.4Max
C	10.5Max
D	3.2±0.5
E	2.1±0.5
F	1.1±0.5
G	1.8Typ.
H	4.8Typ.

2、产品品名构成 Product Spec. Model

SRVR . 966411 . Y F . R10 L T 00

a b c d e f g h

a：Series name

b：Product dimensions（a x c）

c：Sealing way (L: Cold seal Y: Heat seal)

d：Lettering direction ▶

e：Inductance Value

(1R0:1.0uH; 100: 10uH; 101:100uH)

f：Inductance Tolerance (K:10% ; L:15% ; M:20%)

g：Package(T:Tape/Reel、B: Bulk)

h：Numbering（standard）

3、绕组图：

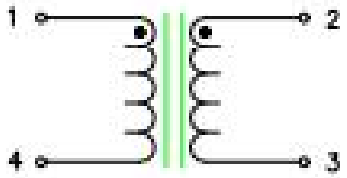

4、电性能参数表 Electrical Characteristics List

规格型号 Part NO.	电感量 Inductance (nH) 1-4/2-3	L i (nH) Min	测试频率 Test Freq. (kHz/v)	DCR (primary clip) mΩ	DCR (secondary clip) mΩ	1-Saturation Current @25℃ (Amps)	2-Saturation Current @100℃ (Amps)	Heating Current (primary clip) (Amps)	Heating Current (secondary clip) (Amps)
SRVR.966411.YF70NLT00	70	47.6	100/1	0.125±10%	0.33±10%	140	116	75	40
SRVR.966411.YFR10LT00	100	64	100/1	0.125±10%	0.33±10%	98	83	75	40
SRVR.966411.YFR12LT00	120	77	100/1	0.125±10%	0.33±10%	79	67	75	40
SRVR.966411.YFR15LT00	150	96	100/1	0.125±10%	0.33±10%	62	53	75	40
SRVR.966411.YFR18LT00	180	115	100/1	0.125±10%	0.33±10%	54	46	75	40
SRVR.966411.YFR22LT00	220	140	100/1	0.125±10%	0.33±10%	50	38	75	40

※公差Tolerance：M:±20%、L:±15%、 K:±10%.

※工作温度Operating temperature rang：-40 ℃ to +125℃（Including Self-heating）

※储存温度Storage termperature rang：-40 ℃ to +125℃

Test Condition : (1)-(4)=(2)-(3) @100KHz , 1.0Vrms , 25deg.C Ambient.

Li is the value of the inductance : at 25°C at the listed rated current.

DCR @ 25℃, test DCR1-4 & DCR2-3 which was shown on dimension page.

Heating Current : DC current that will cause an approximate ΔT of 40℃

1-Saturation Current : is the DC current which causes the inductance drop to Li at +25℃

2-Saturation Current : is the DC current which causes the inductance drop to Li at +100℃

Operating Temperature:-40℃~+125°C(Including self-temperature rise).

5、产品包装 Packaging

1）载带包装示意图 Tape packing diagram

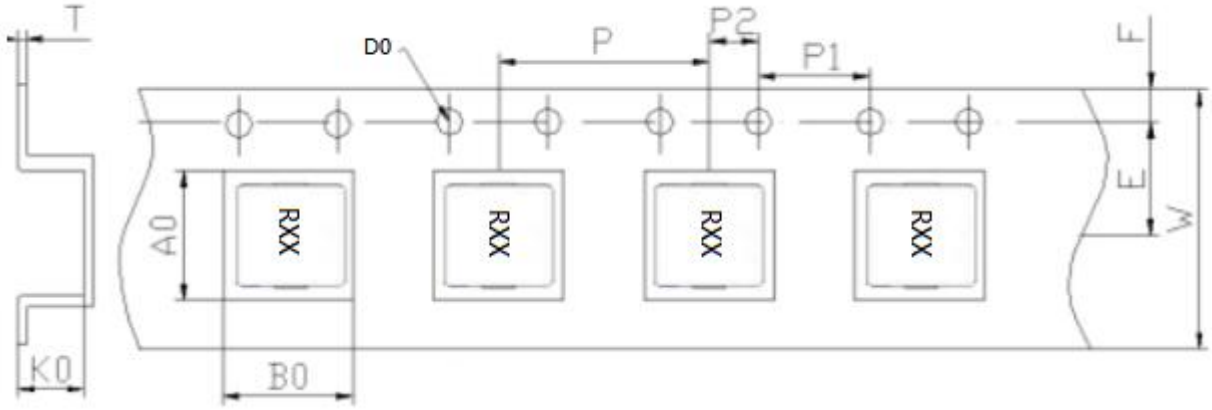

ITEM	W	A0	B0	K0	P	E	F	D0	P1	P2	T
DIM	24.00	9.80	6.60	10.7	12.00	11.50	1.75	1.50	4.00	2.00	0.50
TOLE	±0.3	±0.1	±0.1	±0.1	±0.1	±0.1	±0.1	+0.1	±0.1	±0.1	±0.05

2）卷盘尺寸 REEL DIMENSION(mm)

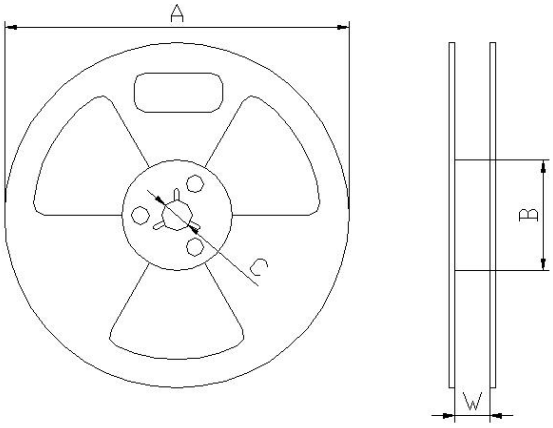

A	330±0.5
B	100±0.5
C	13.5±0.5
W	24.5±0.5

3）卷盘包装示意图 Tape packing diagram

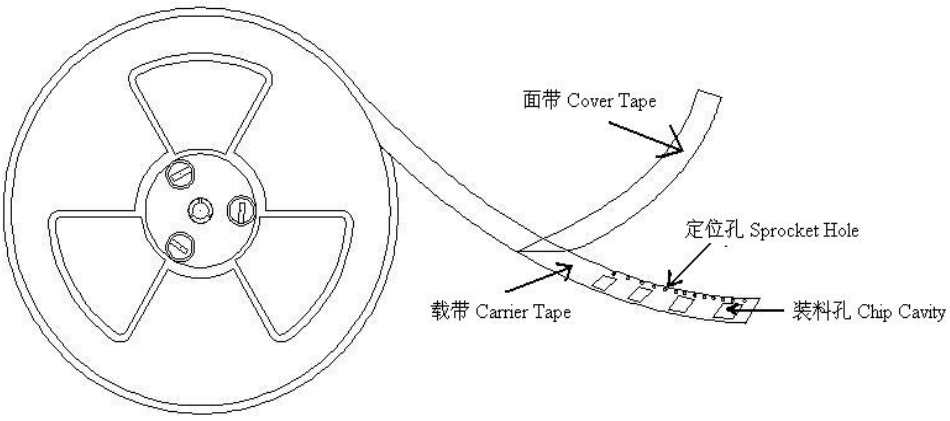

4）剥离强度要求Peeling required

①F 力大小：20～100g；

②面带剥离角度：165°～180°。

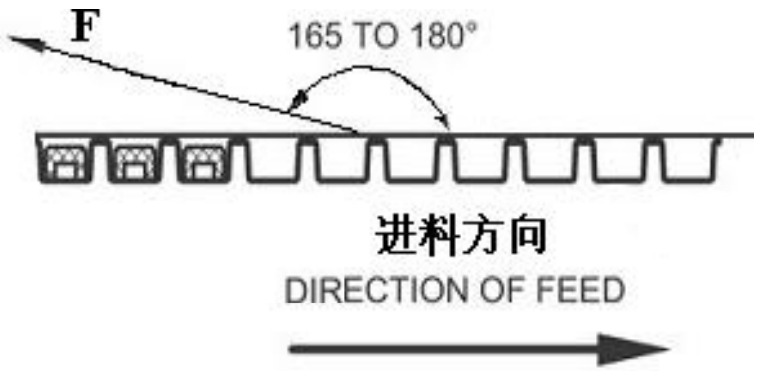

5）包装数量 Packing quantity

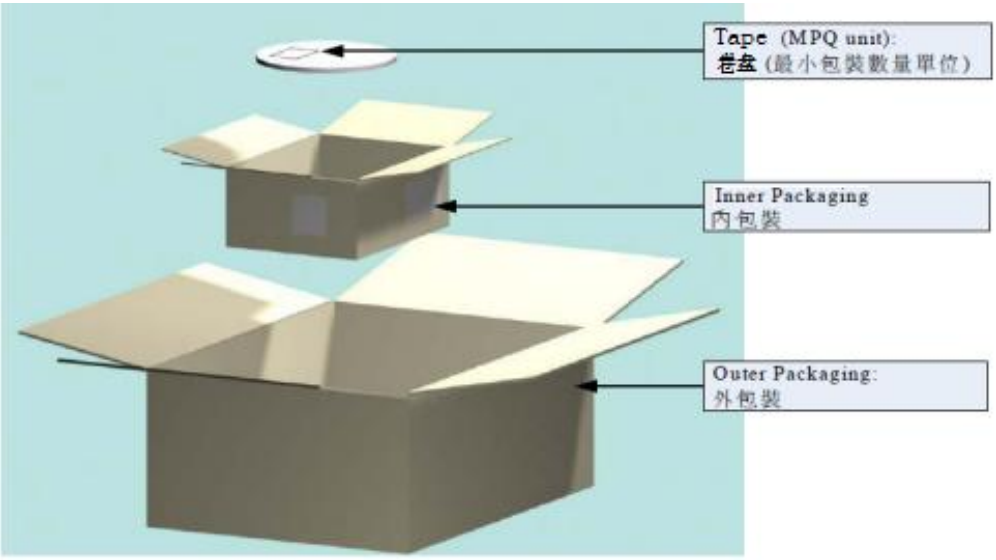

项目 (Project)	数量（PCS）	尺寸规格（Size:mm）
盘(Reel)	500	13″
内盒 (Inner box)	1000	340mm*340mm*65mm
外箱 (Out box)	3000	360mm*360mm*235mm

5、注意事项 Note

①本承认书保证我司产品作为一个单体时的质量情况。当我司产品被安装到贵司产品上时，请保证贵司的产品已根据贵司的规范进行了有效评估和确认。

This product specification guarantees the quality of our product as a single unit. Please make sure that your product is evaluated and confirmed against your specifications when our product is mounted to your product.

②如果贵司对我司产品的使用已超过了本承认书所界定的产品功能，那么对于由此引发的失效，我司将不予保证。

We cannot warrant against failure caused by any use of our product that deviates from the intended use as described in this product specification.

③为了保持终端电极的焊接性，并使包装材料保持良好状态，必须控制储存区的温度和湿度。
To maintain the solderabilty of terminal electrodes and to keep the packing material in good condition,temperature and humidity in the storage area shouid be controlled.

※建议的条件：-10 ~ +40℃，30~70%RH。

Recommended conditions: -10 ~ +40℃，30~70%RH.

※储存超过六个月的，应在实际使用前进行焊接检验。
In case of storage over 6 months,soldrability shall be checked before actual usage.

※即使在理想的储存条件下，产品的可焊性也随着时间的推移而降低。因此，产品应从交货时算起，建议8个月之内使用完。

Even under ideal storage conditions, the weldability of the product decreases over time. therefore, the product should be From the time of delivery, it is recommended that it be used within 8 months.

④本承认书在客户收到30 天之内，必须签章返回，逾期视为默认。

The Specification Approval should be sent back to the supplier with customer`schop on it within 30 days after receiving it, or we will take it as approved by customer`s automatically.

⑤如有特殊规格要求，请事前联络我司技术部人员。

In case of special specifications please contact our technical department prior staff.