Product Description

The LMV721 (single), LMV722 (dual) and LMV724 (quad) are low noise, low voltage, and micro power operational amplifiers. With an excellent bandwidth of 10MHz, a slew rate of 9V/μs, and a quiescent current of 1000μA per amplifier at 5V, the LMV72x family can be designed into a widerange of applications.

The LMV72x op-amps are designed to provide optimal performance in low voltage and low noise systems. The input common-mode voltage range includes ground, and the maximum input offset voltage are 3.5mV. These parts provide rail-to-rail output swing into heavy loads. The LMV72x family is specified for single or dual power supplies of +2.5V to +5.5V. All models are specified over the extended industrial temperature range of −40°C to +125°C.

The LMV721 is available in 5-lead SC70 and SOT-23 packages. The LMV722 is available in 8-lead MSOP, and SOP packages. The LMV724 is available in 14-lead SOP packages.

Fearures

- General Purpose 1 0 MHz Amplifiers, Low Cost
- High Slew Rate: 9 V/μs
- Low Offset Voltage:3.5 mV Maximum
- Low Power:1000 μA per Amplifier Supply Current
- Unit Gain Stable
- Rail-to-Rail Input and Output
- Operating Power Supply: +2.5 V to +5.5 V
- Operating Temperature Range: −40°C to +125°C
- Low Noise:20 nV/√Hz@10kHz

Applications

- Photodiode Amplification
- Sensor Interfaces
- Audio Outputs
- Active Filters
- Driving A/D Converters
- Portable Equipment & Battery-Powered Instrumentation

Pin Configuration

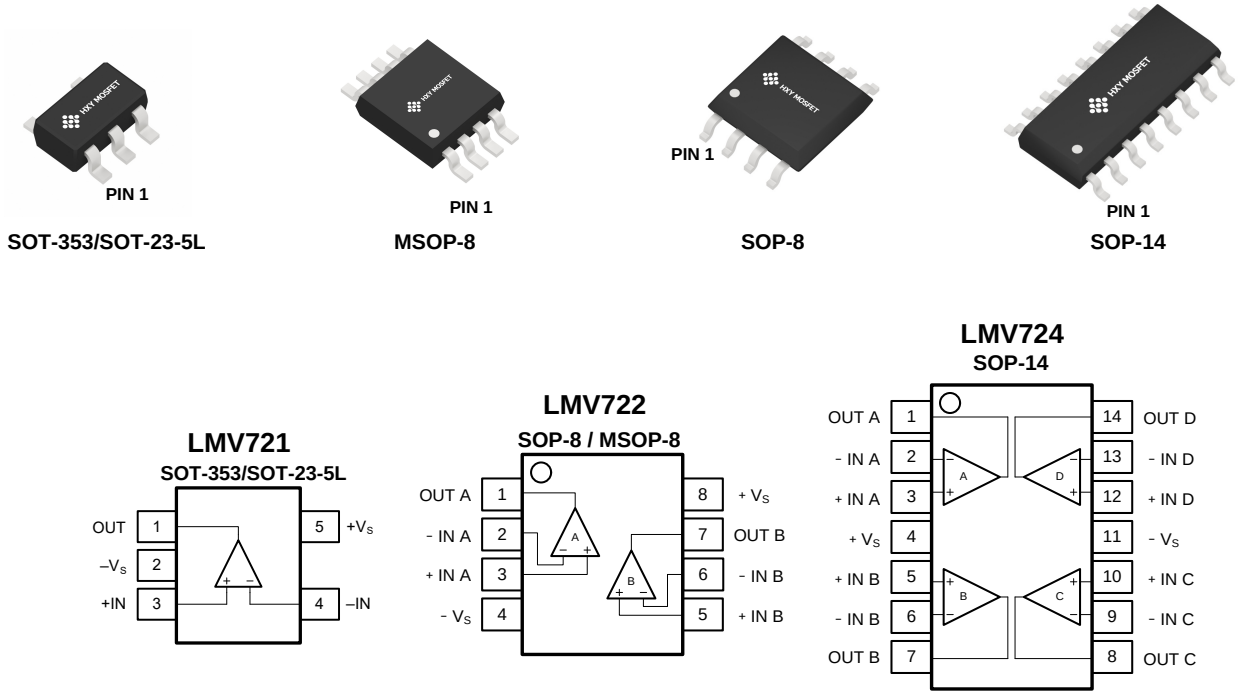

Figure 1. Pin Assignment Diagram

Absolute Maximum Ratings

Supply Voltage, $+V_S$ to $-V_S$ 7V
Input Common Mode Voltage Range
..... $(-V_S)$ - 0.5V to $(+V_S)$ + 0.5V
Storage Temperature Range .....-65℃ to +150℃
Junction Temperature.....+160℃
Lead Temperature (Soldering 10sec).....+260℃
ESD Susceptibility
HBM.....4000V
CDM 1000V

Recommended Operating Conditions

Operating Temperature Range.....-40℃ to +125℃

Note: Stress greater than those listed under Absolute Maximum Ratings may cause permanent damage to the device. This is a stress rating only and functional operation of the device at these or any other conditions outside those indicated in the operational sections of this specification are not implied. Exposure to absolute maximum rating conditions for extended periods may affect reliability.

Ordering Information

Product Model	Package Type	Packing	Packing Qty
LMV721IDBVR	SOT-23-5L	Tape	3000Pcs/Reel
LMV721IDCKR	SOT-353	Tape	3000Pcs/Reel
LMV722IDR	SOP-8	Tape	2500Pcs/Reel
LMV722IDGKR	MSOP-8	Tape	3000Pcs/Reel
LMV724M	SOP-14	Tape	2500Pcs/Reel

Electrical Characteristics

V_S = 5.0V, T_A = +25℃, V_{CM} = V_S/2, V_O = V_S/2, and R_L = 10kΩ connected to V_S/2, unless otherwise noted.
Boldface limits apply over the specified temperature range, T_A = −40 to +125 ℃.

Symbol	Parameter	Conditions	Min.	Typ.	Max.	Unit
Input Characteristics						
V_{OS}	Input offset voltage		-3.5	±0.8	+3.5	mV
		B Version	-0.9	±0.4	+0.9	mV
		C Version	-0.35	±0.1	+0.35	mV
$V_{OS}TC$	Offset voltage drift			3		μV/°C
I_B	Input bias current			1		pA
	Over temperature			800		
I_{OS}	Input offset current			1		pA
V_{CM}	Common-mode voltage range		V_{S-}–0.1		V_{S+}+0.1	V
CMRR	Common-mode rejection ratio	V_{CM} = 0.05V to 3.5V	70	84		dB
	Over temperature			80		
		V_{CM} = V_{S-}–0.1 to V_{S+}+0.1 V	60	76		
A_{VOL}	Open-loop voltage gain	R_L = 10kΩ, V_O = 0.1 to 4.9 V	90	102		
	Over temperature			90		
		R_L = 600Ω, V_O = 0.2 to 4.8 V	80	89		
	Over temperature			80		
R_{IN}	Input resistance			100		GΩ
C_{IN}	Input capacitance	Differential		2.0		pF
		Common mode		3.5		
Output Charateristics						
V_{OH}	High output voltage swing	R_L = 600Ω		V_{S+}–100		mV
		R_L = 10kΩ		V_{S+}–8		
V_{OL}	Low output voltage swing	R_L = 600Ω		100		mV
		R_L = 10kΩ		8		
Z_{OUT}	Closed-loop output impedance	f = 200kHz, G = +1		0.8		Ω
	Open-loop output impedance	f = 1MHz, I_O = 0		3		
I_{SC}	Short-circuit current	Source current through 10Ω		40		mA
		Sink current through 10Ω		40		

Electrical Characteristics

Symbol	Parameter	Conditions	Min.	Typ.	Max.	Unit
Dynamic Performance						
GBW	Gain bandwidth product	f = 1kHz		10		MHz
Φ_M	Phase margin	C_L = 100pF		60		°
SR	Slew rate	G = +1, C_L = 100pF, V_O = 1.5V to 3.5V		9		V/μs
BW_P	Full power bandwidth	<1% distortion		400		kHz
t_S	Settling time	To 0.1%, G = +1, 2V step		0.25		μs
		To 0.01%, G = +1, 2V step		0.28		
t_{OR}	Overload recovery time	V_{IN} * Gain > V_S		0.5		μs
Noise Performance						
V_n	Input voltage noise	f = 0.1 to 10 Hz		12		μV_{P-P}
e_n	Input voltage noise density	f = 10kHz		20		nV/√Hz
I_n	Input current noise density	f = 10kHz		5		fA/√Hz
Power Supply						
V_S	Operating supply voltage		2.5		5.5	V
PSRR	Power supply rejection ratio	V_S = 2.7V to 5.5V, V_{CM} < V_{S+} +0.5V	70	95		dB
	Over temperature			80		
I_Q	Quiescent current (per amplifier)			1000	1300	μA
	Over temperature			1200	1600	
Thermall Characteristics						
T_A	Operating temperature range		-40		+125	°C
θ_{JA}	Package thermal resistance	SOT-353		333		°C/W
		SOT-23-5L		190		
		MSOP-8		216		
		SOP-8		125		
		DFN-8L		201		
		SOP-14		115		

Typical Performance characteristics

At T_A = +25℃, V_{CM} = V_S /2, and R_L = 10kΩ connected to V_S /2, unless otherwise noted.

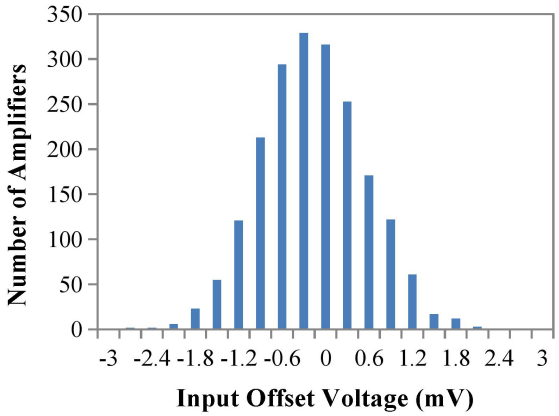

Fig. 2 Input Offset Voltage Production

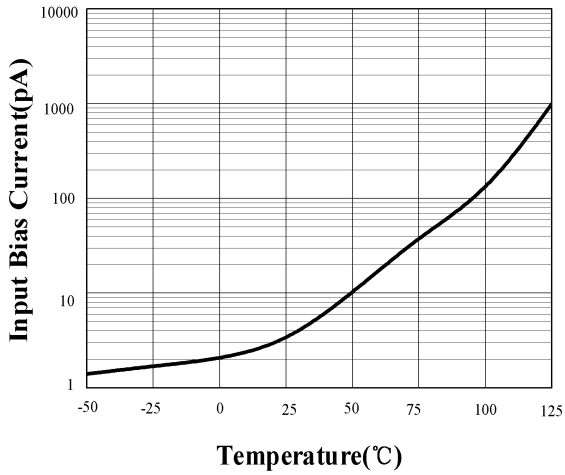

Fig. 3 Input Bias Current as a Function of Temperature

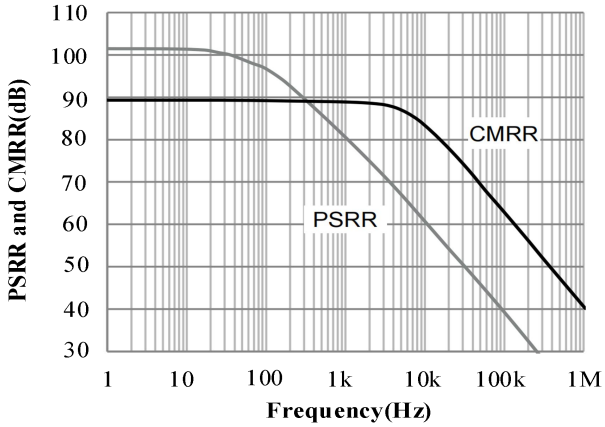

Fig. 4 Power Supply and Common-mode Rejection Ratio as a Function of Frequency

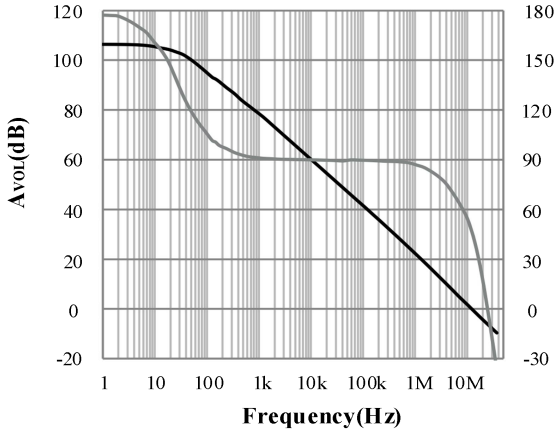

Fig. 5 Open-loop Gain and Phase as a function of Frequency

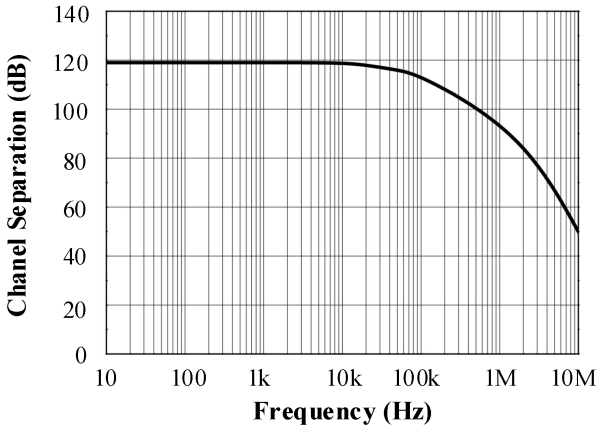

Fig. 6 Channel Separation as a function of Frequency

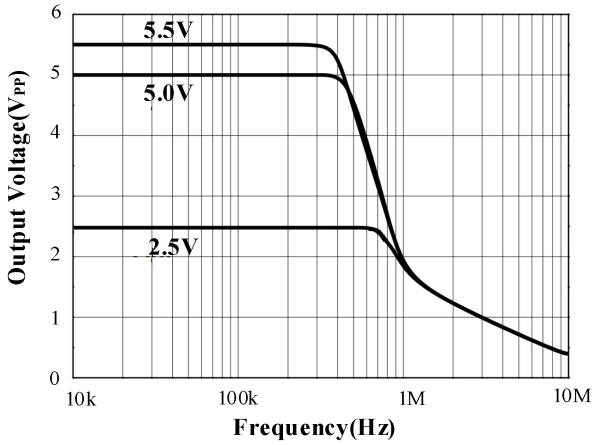

Fig. 7 Maximum Output Voltage as a function of Frequency

Typical Performance characteristics

(T_A = +25℃, V_{CM} = V_S/2, and R_L = 10kΩ connected to V_S/2, unless otherwise noted.)

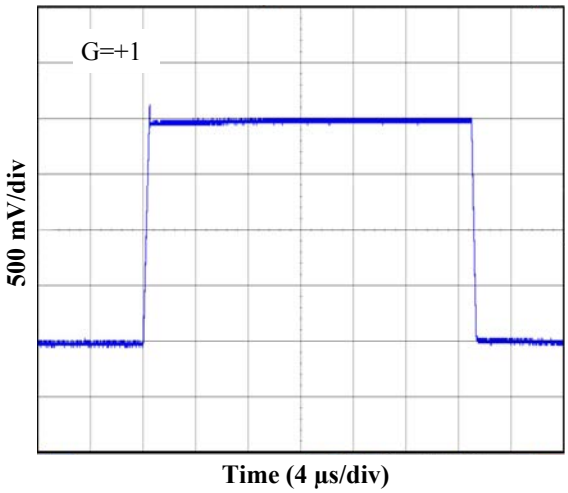

Fig. 8 Large-Signal Step Response at 2.7V

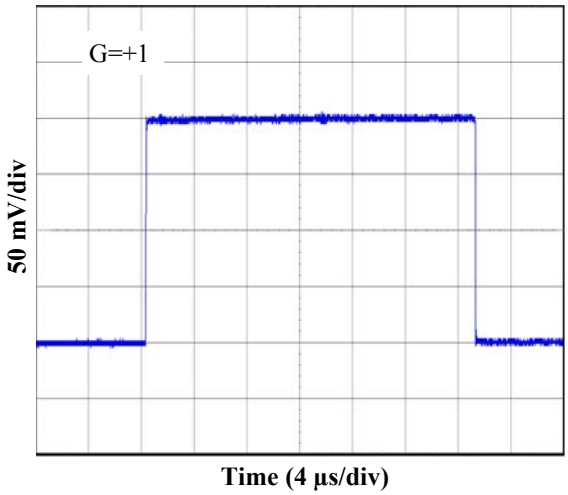

Fig. 9 Small-Signal Step Response at 2.7V

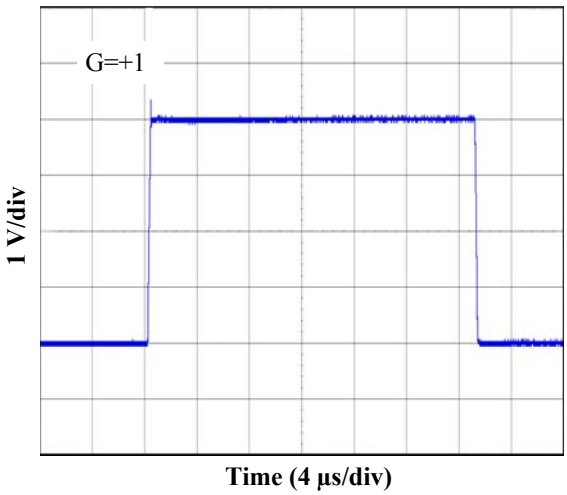

Fig. 10 Large-Signal Step Response at 5V

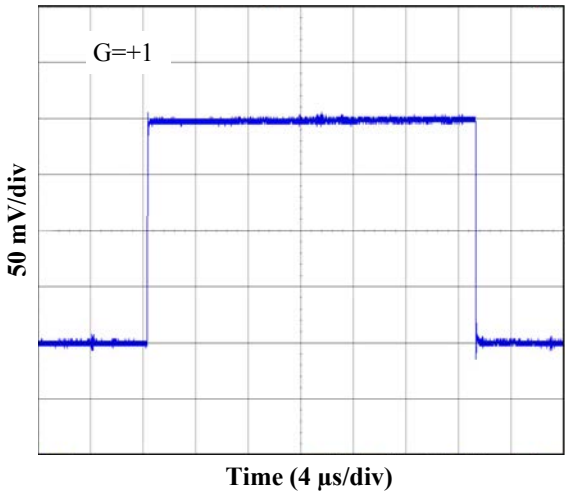

Fig. 11 Small-Signal Step Response at 5V

Application Note

1. Low Input Bias Current

The LMV72X family is a CMOS op-amp family and features very low input bias current in pA range. The low input bias current allows the amplifiers to be used in applications with high resistance sources. Care must be taken to minimize PCB Surface Leakage. See below section on "PCB Surface Leakage" for more details.

2. PCB Surface Leakage

In applications where low input bias current is critical, Printed Circuit Board (PCB) surface leakage effects need to be considered. Surface leakage is caused by humidity, dust or other contamination on the board. Under low humidity conditions, a typical resistance between nearby traces is $10^{12}\Omega$. A 5V difference would cause 5pA of current to flow, which is greater than the LMV72X's input bias current at +25°C (±1pA, typical). It is recommended to use multi-layer PCB layout and route the op-amp's –IN and +IN signal under the PCB surface.

The effective way to reduce surface leakage is to use a guard ring around sensitive pins (or traces). The guard ring is biased at the same voltage as the sensitive pin. An example of this type of layout is shown in Figure 12 for Inverting Gain application.

1. For Non-Inverting Gain and Unity-Gain Buffer:

a) Connect the non-inverting pin (+IN) to the input with a wire that does not touch the PCB surface.
b) Connect the guard ring to the inverting input pin (-IN). This biases the guard ring to the Common Mode input voltage.

2. For Inverting Gain and Trans-impedance Gain Amplifiers (convert current to voltage, such as photo detectors):

a) Connect the guard ring to the non-inverting input pin (+IN). This biases the guard ring to the same reference voltage as the op-amp (e.g., VS/2 or ground).
b) Connect the inverting pin (-IN) to the input with a wire that does not touch the PCB surface.

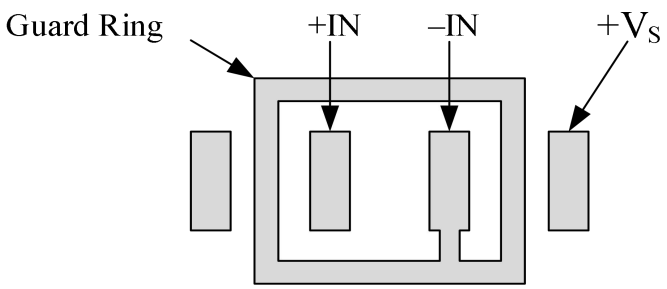

Fig. 12 Use a Guard Ring around Sensitive Pins

3. Ground Sensing And Rail To Rail

The input common-mode voltage range of the LMV72X series extends 300mV beyond the supply rails. This is achieved with a complementary input stage—a N-channel input differential pair in parallel with a P-channel differential pair. For normal operation, inputs should be limited to this range. The absolute maximum input voltage is 500mV beyond the supplies. Inputs greater than the input common-mode range but less than the maximum input voltage, while not valid, will not cause any damage to the op-amp. Unlike some other op-amps, if input current is limited, the inputs may go beyond the supplies without phase inversion, as shown in Figure 13. Since the input common-mode range extends from (V_{S-} − 0.1V) to (V_{S+} + 0.1V), the LMV72X op-amps can easily perform 'true ground' sensing.

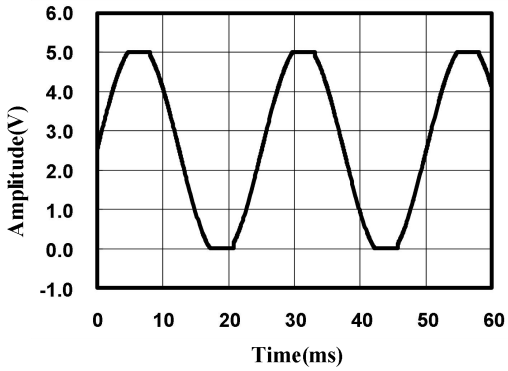

Fig. 13 No Phase Inversion with Inputs Greater Than the Power-Supply Voltage

A topology of class AB output stage with common-source transistors is used to achieverail-to-rail output. For light resistive loads (e.g. 100kΩ), the output voltage can typically swing to within 5mV from the supply rails. With moderate resistive loads (e.g. 10kΩ), the output can typically swing to within 10mV from the supply rails and maintain high open-loop gain.

The maximum output current is a function of total supply voltage. As the supply voltage to the amplifier increases, the output current capability also increases. Attention must be paid to keep the junction temperature of the IC below 150℃ when the output is in continuous short-circuit. The output of the amplifier has reverse-biased ESD diodes connected to each supply. The output should not be forced more than 0.5V beyond either supply, otherwise current will flow through these diodes.

4. Capacitive Load And Stability

The LMV72X can directly drive 1nF in unity-gain without oscillation. The unity-gain follower (buffer) is the most sensitive configuration to capacitive loading.

Direct capacitive loading reduces the phase margin of amplifiers and this results in ringing or even oscillation. Applications that require greater capacitive drive capability should use an isolation resistor between the output and the capacitive load like the circuit in Figure 14. The isolation resistor R_{ISO} and the load capacitor C_L form a zero to increase stability. The bigger the R_{ISO} resistor value, the more stable V_{OUT} will be. Note that this method results in a loss of gain accuracy because R_{ISO} forms a voltage divider with the R_L.

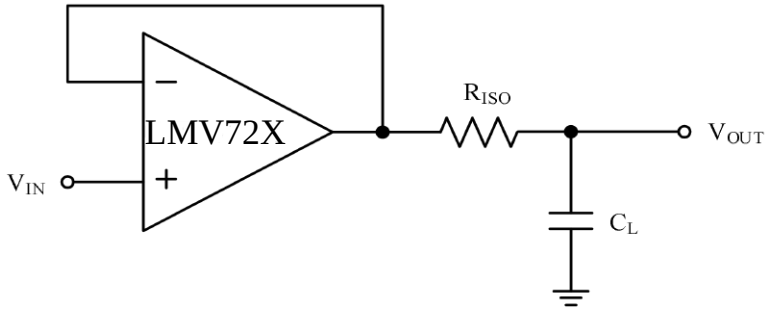

Fig. 14 Indirectly Driving Heavy Capacitive Load

An improvement circuit is shown in Figure 15. It provides DC accuracy as well as AC stability. The R_F provides the DC accuracy by connecting the inverting signal with the output.

The C_F and R_{ISO} serve to counteract the loss of phase margin by feeding the high frequency component of the output signal back to the amplifier's inverting input, thereby preserving phase margin in the overall feedback loop.

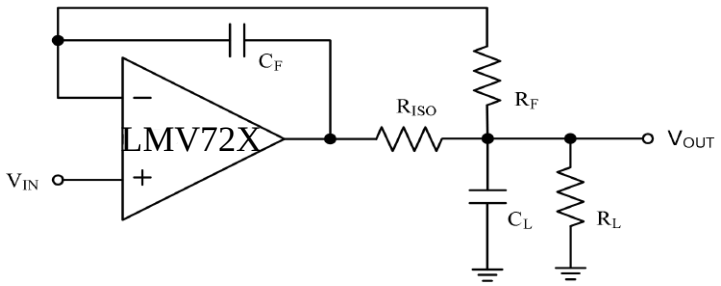

Fig. 15 Indirectly Driving Heavy Capacitive Load with DC Accuracy

For no-buffer configuration, there are two other ways to increase the phase margin: (a) by increasing the amplifier's gain, or (b) by placing a capacitor in parallel with the feedback resistor to counteract the parasitic capacitance associated with inverting node.

5. Power Supply Layout And Bypass

The LMV72X family operates from either a single +2.5V to +5.5V supply or dual ±1.25V to ±2.25V supplies. For single-supply operation, bypass the power supply V_S with a ceramic capacitor (i.e. 0.01μF to 0.1μF) which should be placed close (within 2mm for good high frequency performance) to the V_S pin. For dual-supply operation both the V_{S+} and the V_{S-} supplies should be bypassed to ground with separate 0.1μF ceramic capacitors. A bulk capacitor (i.e. 2.2 μF or larger tantalum capacitor) within 100mm to provide large, slow currents and better performance. This bulk capacitor can be shared with other analog parts. Good PC board layout techniques optimize performance by decreasing the amount of stray capacitance at the op-amp's inputs and output. To decrease stray capacitance, minimize trace lengths and widths by placing external components as close to the device as possible. Use surface-mount components whenever possible. For the op-amp, soldering the part to the board directly is strongly recommended. Try to keep the high frequency big current loop area small to minimize the EMI (electromagnetic interfacing).

6. Grounding

A ground plane layer is important for the LMV72X circuit design. The length of the current path speed currents in an inductive ground return will create an unwanted voltage noise. Broad ground plane areas will reduce the parasitic inductance.

7. Input To Output Coupling

To minimize capacitive coupling, the input and output signal traces should not be parallel. This helps reduce unwanted positive feedback.

Typical Application Circuits

1. Differential Amplifier

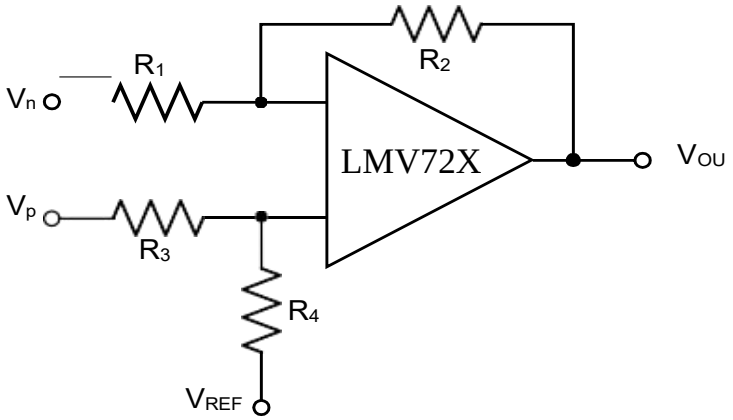

Fig. 16 Differential Amplifier

The circuit shown in Figure 16 performs the difference function. If the resistors ratios are equal R4/R3 = R2/R1, then:

$$V_{OUT} = (V_p - V_n) \times R_2/R_1 + V_{REF}$$

2. Instrumentation Amplifier

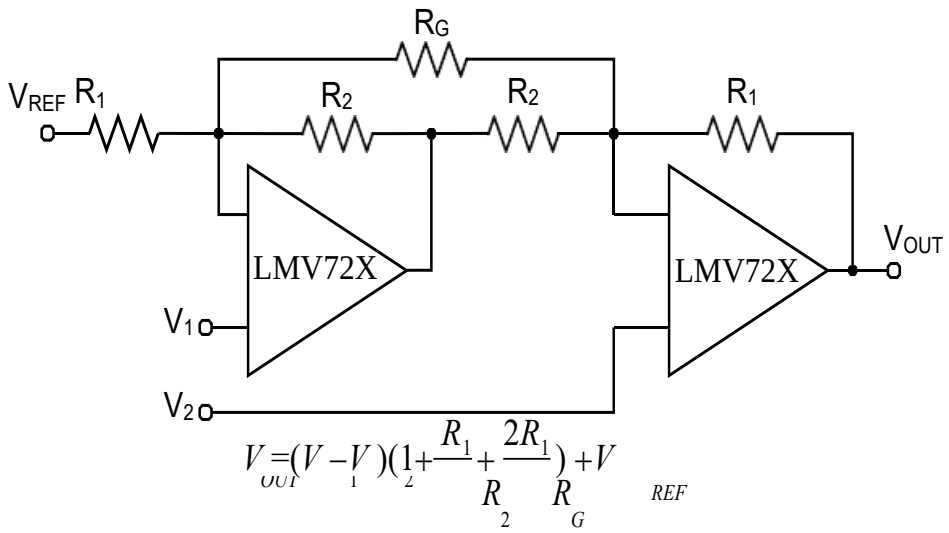

Fig. 17 Instrumentation Amplifier

The LMV72X family is well suited for conditioning sensor signals in battery-powered applications. Figure 17 shows a two op-amp instrumentation amplifier, using the LMV72X op-amps. The circuit works well for applications requiring rejection of common-mode noise at higher gains. The reference voltage (V_{REF}) is supplied by a low-impedance source. In single voltage supply applications, the V_{REF} is typically $V_S/2$.

3. Buffered Chemical Sensors

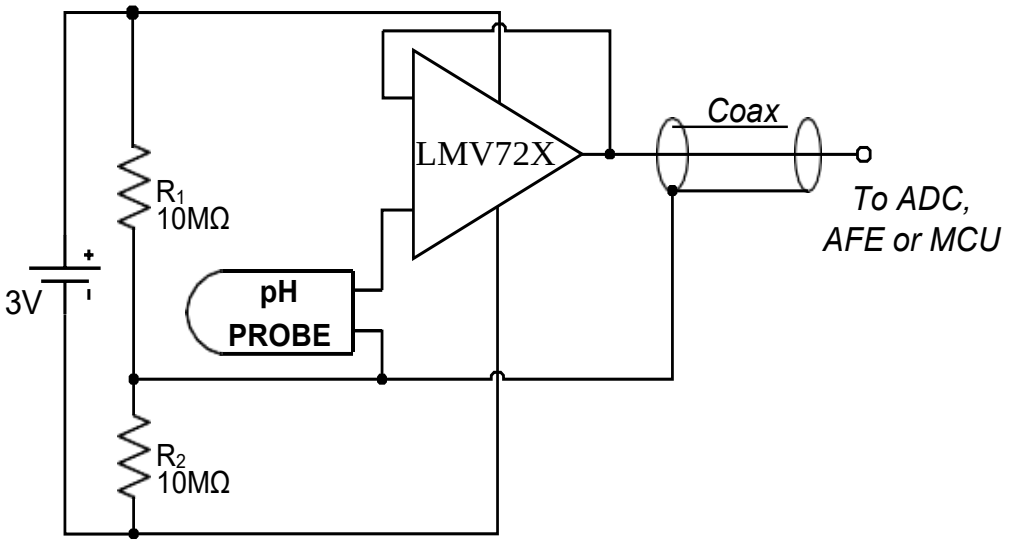

Fig. 18 Buffered pH Probe

The LMV72X family has input bias current in the pA range. This is ideal in buffering high impedance chemical sensors, such as pH probes. As an example, the circuit in Figure 7 eliminates expansive low-leakage cables that is required to connect a pH probe (general purpose combination pH probes, e.g Corning 476540) to metering ICs such as ADC, AFEand/or MCU. An LMV72X op-amp and a lithium battery are housed in the probe assembly. A conventional low-cost coaxial cable can be used to carry the op-amp's output signal tosubsequent ICs for pH reading.

4. Shunt-Based Current Sensing Amplifier

The current sensing amplification shown in Figure 8 has a slew rate of $2\pi f V_{PP}$ for the output of sine wave signal, and has a slew rate of $2fV_{PP}$ for the output of triangular wave signal. In most of motor control systems, the PWM frequency is at 10kHz to 20kHz, and one cycle time is 100μs for a 10kHz of PWM frequency. In current shunt monitoring for a motor phase, the phase current is converted to a phase voltage signal for ADC sampling. This sampling voltage signal must be settled before entering the ADC. As the Figure 8 shown, the total settling time of a current shunt monitor circuit includes: the rising edge delay time (t_{SR}) due to the op-amp's slew rate, and the measurement settling time (tSET). If the minimum duty cycle of the PWM is defined at 5%, and the t_{SR} is required at 20% of a total time window for a phase current monitoring, in case of a 3.3V motor control system (3.3V MCU with 12-bit ADC), the op-amp's slew rate should be more than:

3.3V / (100μs× 5% × 20%) = 3.3 V/μs

At the same time, the op-amp's bandwidth should be much greater than the PWM frequency, like 10 time at least.

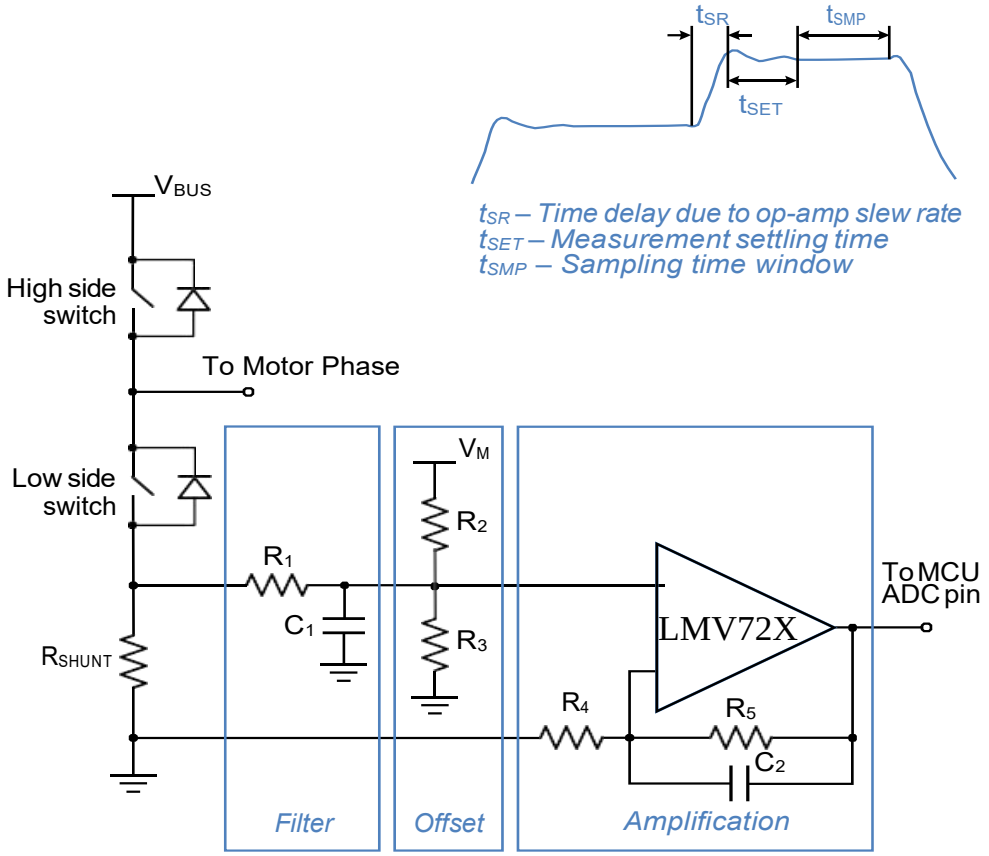

Fig. 19 Current Shunt Monitor Circuit

Package Information

MSOP-8

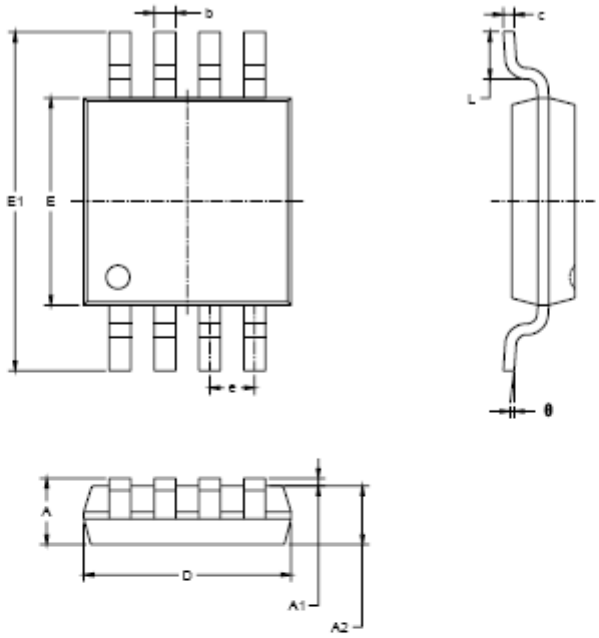

Symbol	Dimensions In Millimeters		Dimensions In Inches	
	MIN	MAX	MIN	MAX
A	0.820	1.100	0.032	0.043
A1	0.020	0.150	0.001	0.006
A2	0.750	0.950	0.030	0.037
b	0.250	0.380	0.010	0.015
c	0.090	0.230	0.004	0.009
D	2.900	3.100	0.114	0.122
E	2.900	3.100	0.114	0.122
E1	4.750	5.050	0.187	0.199
e	0.650 BSC		0.026 BSC	
L	0.400	0.800	0.016	0.031
θ	0°	6°	0°	6°

SOP-8

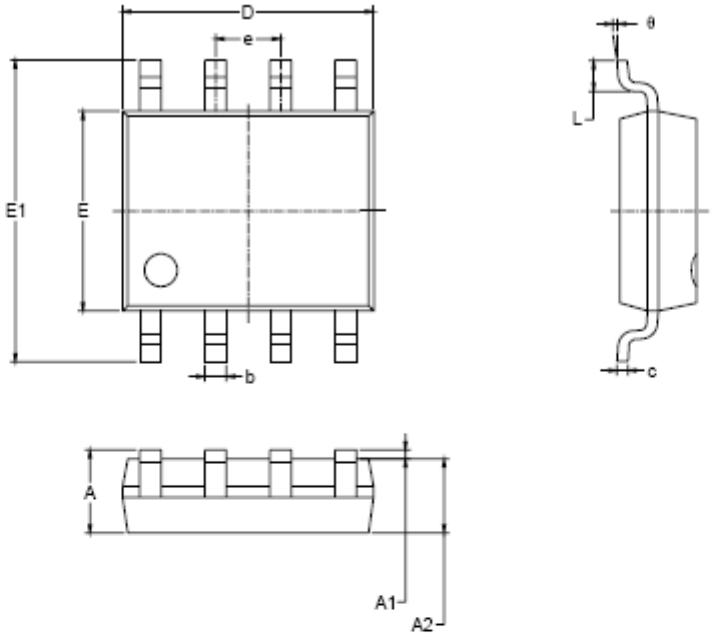

Symbol	Dimensions In Millimeters		Dimensions In Inches	
	MIN	MAX	MIN	MAX
A	1.350	1.750	0.053	0.069
A1	0.100	0.250	0.004	0.010
A2	1.350	1.550	0.053	0.061
b	0.330	0.510	0.013	0.020
c	0.170	0.250	0.006	0.010
D	4.700	5.100	0.185	0.200
E	3.800	4.000	0.150	0.157
E1	5.800	6.200	0.228	0.244
e	1.27 BSC		0.050 BSC	
L	0.400	1.270	0.016	0.050
θ	0°	8°	0°	8°

SOT-23-5L

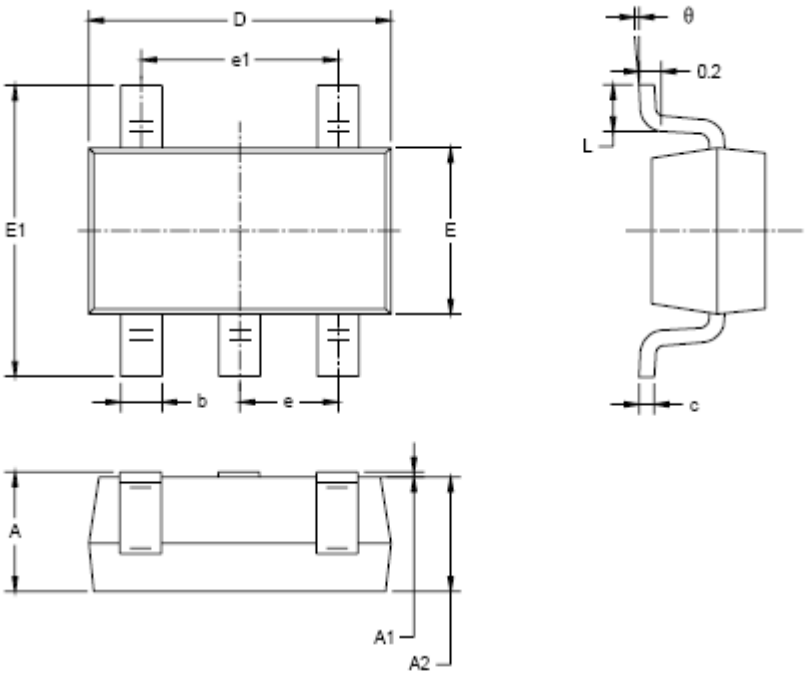

Symbol	Dimensions In Millimeters		Dimensions In Inches	
	MIN	MAX	MIN	MAX
A	1.050	1.250	0.041	0.049
A1	0.000	0.100	0.000	0.004
A2	1.050	1.150	0.041	0.045
b	0.300	0.500	0.012	0.020
c	0.100	0.200	0.004	0.008
D	2.820	3.020	0.111	0.119
E	1.500	1.700	0.059	0.067
E1	2.650	2.950	0.104	0.116
e	0.950 BSC		0.037 BSC	
e1	1.900 BSC		0.075 BSC	
L	0.300	0.600	0.012	0.024
θ	0°	8°	0°	8°

SOT-353

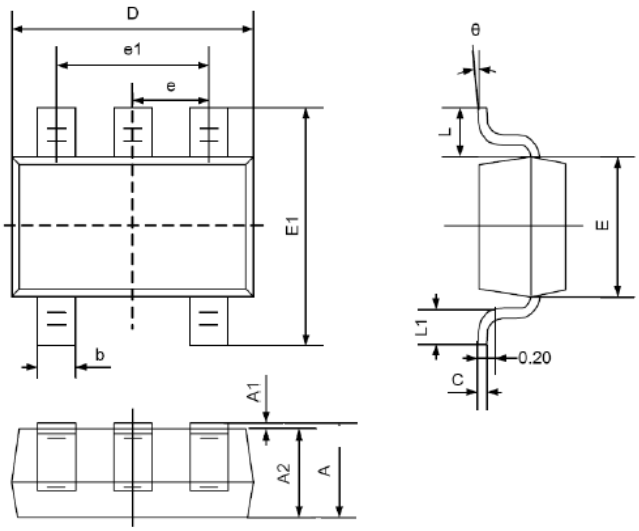

Symbol	Dimensions In Millimeters		Dimensions In Inches	
	Min	Max	Min	Max
A	0.900	1.100	0.035	0.043
A1	0.000	0.100	0.000	0.004
A2	0.900	1.000	0.035	0.039
b	0.150	0.350	0.006	0.014
C	0.080	0.150	0.003	0.006
D	2.000	2.200	0.079	0.087
E	1.150	1.350	0.045	0.053
E1	2.150	2.450	0.085	0.096
e	0.650TYP		0.026TYP	
e1	1.200	1.400	0.047	0.055
L	0.525REF		0.021REF	
L1	0.260	0.460	0.010	0.018
θ	0°	8°	0°	8°

SOP-14

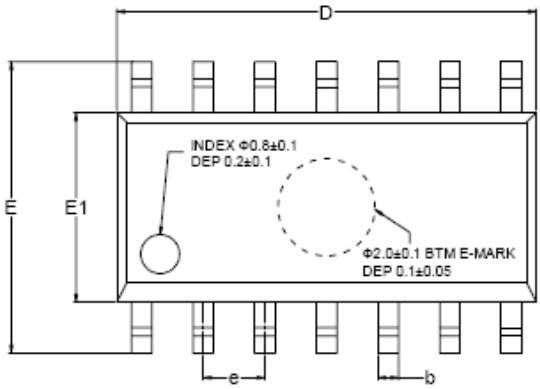

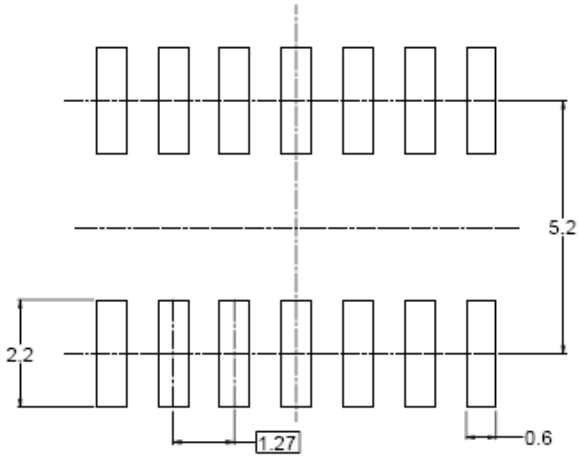

RECOMMENDED LAND PATTERN (Unit: mm)

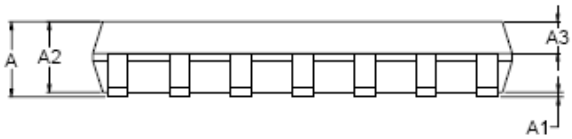

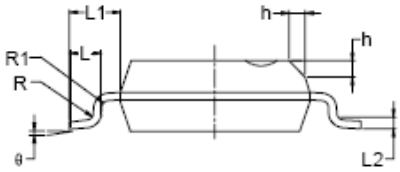

Symbol	Dimensions In Millimeters			Dimensions In Inches		
	MIN	MOD	MAX	MIN	MOD	MAX
A	1.35		1.75	0.053		0.069
A1	0.10		0.25	0.004		0.010
A2	1.25		1.65	0.049		0.065
A3	0.55		0.75	0.022		0.030
b	0.36		0.49	0.014		0.019
D	8.53		8.73	0.336		0.344
E	5.80		6.20	0.228		0.244
E1	3.80		4.00	0.150		0.157
e	1.27 BSC			0.050 BSC		
L	0.45		0.80	0.018		0.032
L1	1.04 REF			0.040 REF		
L2	0.25 BSC			0.01 BSC		
R	0.07			0.003		
R1	0.07			0.003		
h	0.30		0.50	0.012		0.020
θ	0°		8°	0°		8°

Attention

■ Any and all HUA XUAN YANG ELECTRONICS products described or contained herein do not have specifications that can handle applications that require extremely high levels of reliability, such as life-support systems, aircraft's control systems, or other applications whose failure can be reasonably expected to result in serious physical and/or material damage. Consult with your HUA XUAN YANG ELECTRONICS representative nearest you before using any HUA XUAN YANG ELECTRONICS products described or contained herein in such applications.

■ HUA XUAN YANG ELECTRONICS assumes no responsibility for equipment failures that result from using products at values that exceed, even momentarily, rated values (such as maximum ratings, operating condition ranges, or other parameters) listed in products specifications of any and all HUA XUAN YANG ELECTRONICS products described or contained herein.

■ Specifications of any and all HUA XUAN YANG ELECTRONICS products described or contained herein stipulate the performance, characteristics, and functions of the described products in the independent state, and are not guarantees of the performance, characteristics, and functions of the described products as mounted in the customer's products or equipment. To verify symptoms and states that cannot be evaluated in an independent device, the customer should always evaluate and test devices mounted in the customer's products or equipment.

■ HUA XUAN YANG ELECTRONICS CO.,LTD. strives to supply high-quality high-reliability products. However, any and all semiconductor products fail with some probability. It is possible that these probabilistic failures could
give rise to accidents or events that could endanger human lives, that could give rise to smoke or fire, or that could cause damage to other property. When designing equipment, adopt safety measures so that these kinds of accidents or events cannot occur. Such measures include but are not limited to protective circuits and error prevention circuits for safe design, redundant design, and structural design.

■ In the event that any or all HUA XUAN YANG ELECTRONICS products(including technical data, services) described or contained herein are controlled under any of applicable local export control laws and regulations, such products must not be exported without obtaining the export license from the authorities concerned in accordance with the above law.

■ No part of this publication may be reproduced or transmitted in any form or by any means, electronic or mechanical, including photocopying and recording, or any information storage or retrieval system, or otherwise, without the prior written permission of HUA XUAN YANG ELECTRONICS CO.,LTD.

■ Information (including circuit diagrams and circuit parameters) herein is for example only ; it is not guaranteed for volume production. HUA XUAN YANG ELECTRONICS believes information herein is accurate and reliable, but no guarantees are made or implied regarding its use or any infringements of intellectual property rights or other rights of third parties.

■ Any and all information described or contained herein are subject to change without notice due to product/technology improvement, etc. When designing equipment, refer to the "Delivery Specification" for the HUA XUAN YANG ELECTRONICS product that you intend to use.