ROHS

| REV. | ECN NO. | DESCRIPTION | DRAW | DATE |
|---|---|---|---|---|
| | | | | |

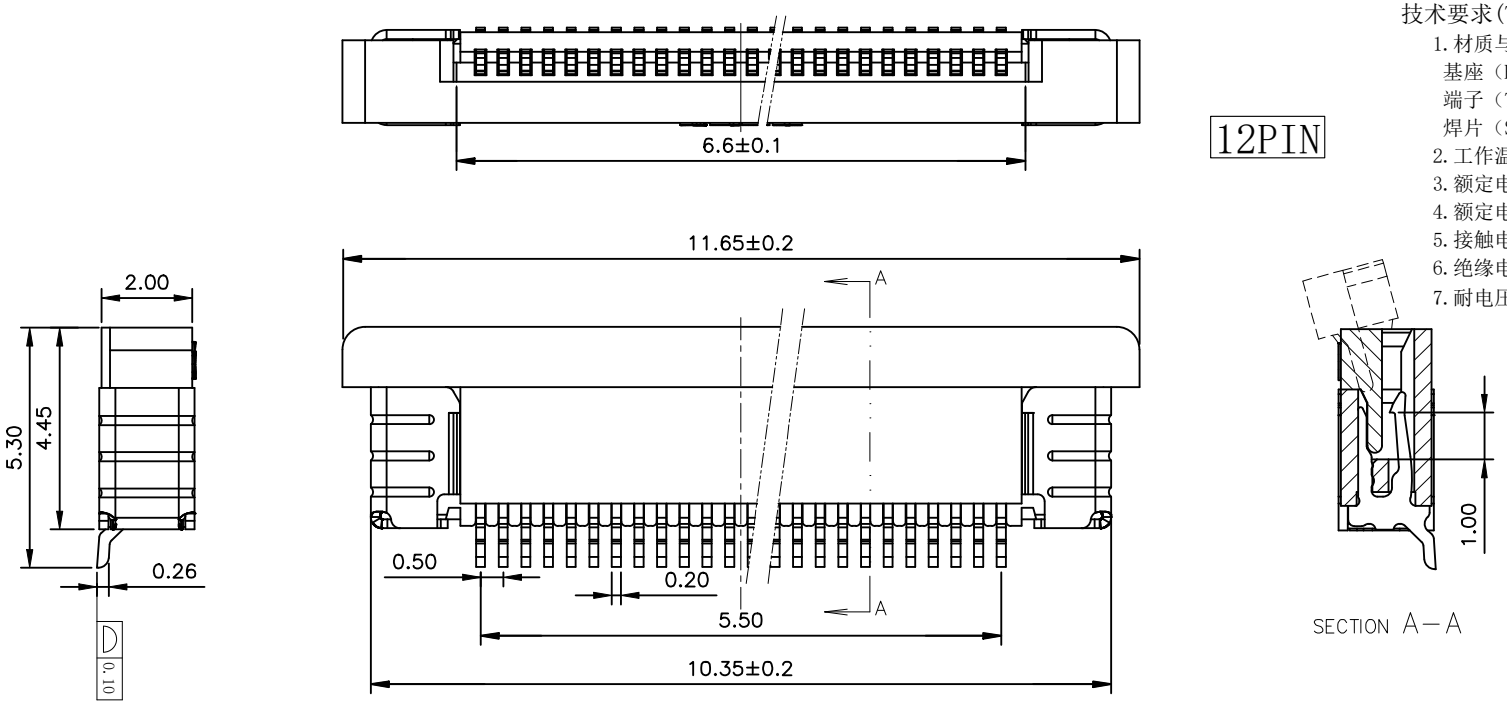


技术要求(Technical Index):

1. 材质与表面处理(Material And Finish):
   基座（Housing）and 盖子（Cover）：LCP UL94V-0 Nature Or Black;
   端子（Terminal）:Phosphor Copper Au/Sn Plated;
   焊片（Solder）：Copper Alloy Au/Sn Plated;
2. 工作温度(Temperature range)：-25° C～+85° C.
3. 额定电压(Rated voltage)：50V，AC/DC.
4. 额定电流：0.4A,AC/DC.
5. 接触电阻(Contact resistance)：≤20mΩ.
6. 绝缘电阻(Insulation resistance):≥500MΩ.
7. 耐电压(Withstanding Voltage):200V AC/minute.

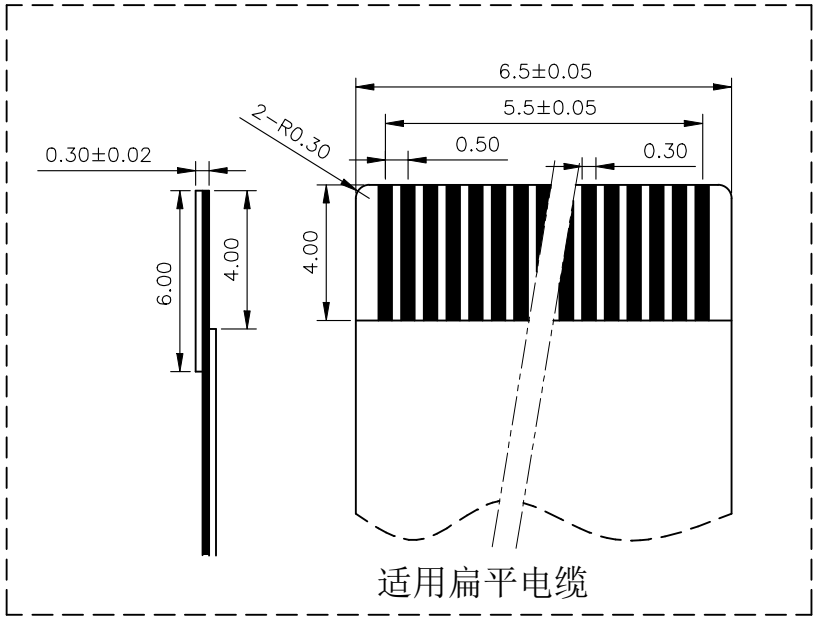


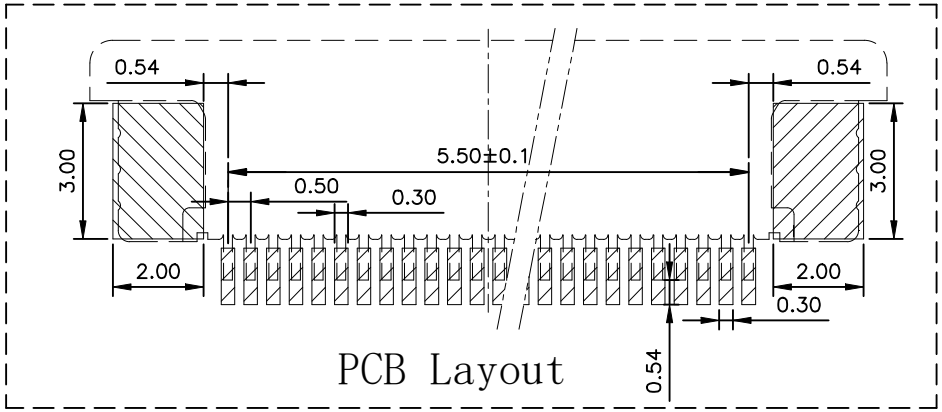


| | | | | | |
|---|---|---|---|---|---|
| COSTOMER DRAWING | | | LAILAN 深圳市莱联电子有限公司 SHENZHEN LAILIAN ELECTRONICS CO.,LTD | | |
| DRAWING | | | TITLE | FPC连接器0.5间距12PIN抽屉式下接（卧贴） | REV. A |
| CHECKED | | | | | |
| APPROVED | | | | | |
| TOLERANCES ARE | | | PART NO. | LAIL-FPC-BX01-12P0.5-W | UNITS mm |
| 30-150 | ±0.35 | ANGLE | | | |
| 10-30 | ±0.2 | | | | |
| 5-10 | ±0.15 | ±3° | DWG. NO. | | Projection |
| 0-5 | ±0.1 | | | | |