Customer's Name

TO.

DESIGN	CHECK	APPROVAL
Kang	LY ISSUED 2021-7-3 R&D DEPT	

Approval Sheet

NO. 20210703001

DATE 2021-7-3

DATE TL3-N1CBRG-AET-AI

CONTENTS	
DESCRIPTION	**CUSTOMER'S APPROVAL**
Assembled Drawing	
Specification	
LED sheet	

Tel: (86)755-2942 4722

Fax:(86)755-2942 4733

DIMENSION	TOLERANCE
BELOW 10 mm	± 0.25
10~50 mm	± 0.4
ABOVE 50 mm	± 0.7

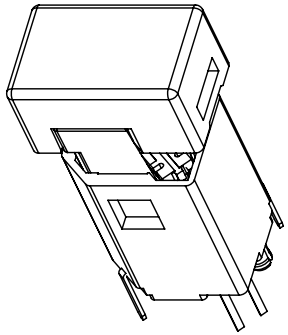

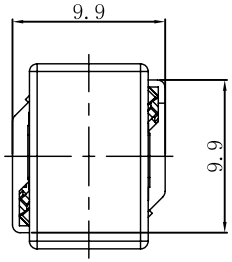

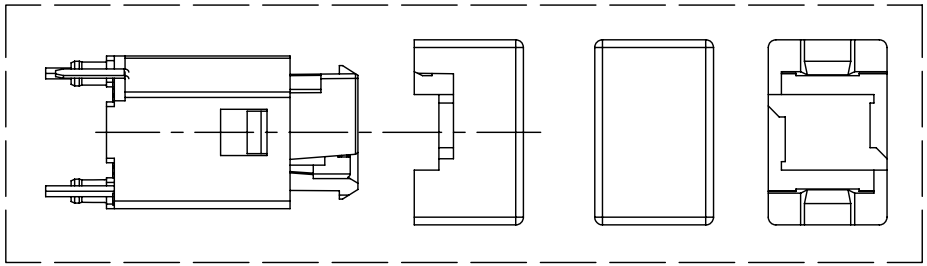

SW CIRCUIT

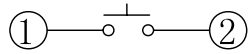

LED CIRCUIT

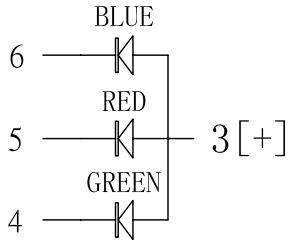

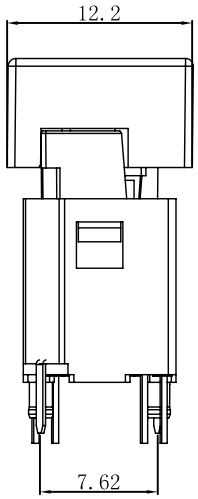

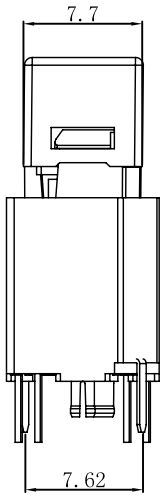

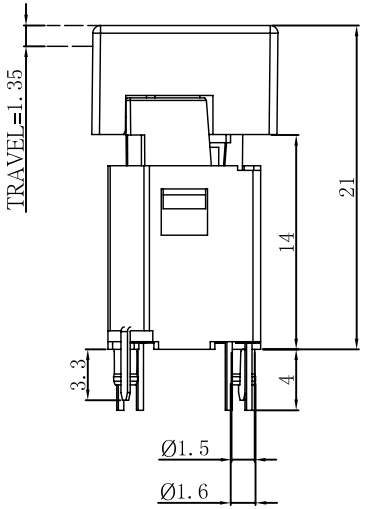

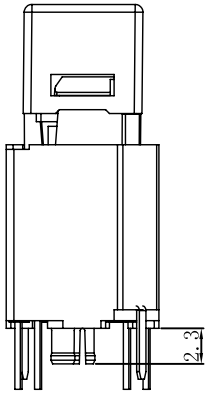

P. C. B. LAYOUT

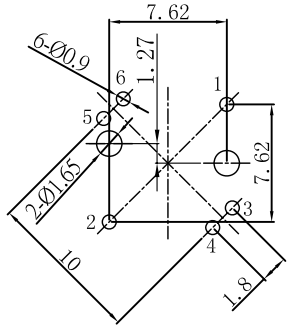

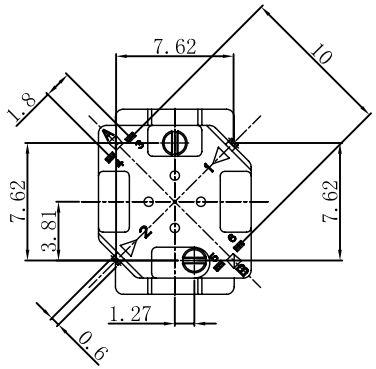

CAP COLOR

W	WHITE
K	BLACK
R	RED
B	BULE
N	WITHOUT
T	Transparent

SPECIFICATION :

1. RATING : 30VDC/100mA[MAX];5VDC/1mA[MIN] .
2. CONTACT RESISTANCE : 180Ω MAX .
3. INSULATION RESISTANCE : 100 V DC - 100 MΩ MIN .
4. WITHSTAND VOLTAGE : 250 V AC - 1 MINUTE .
5. OPERATING FORCE : 125 ± 50 gf .
6. LIFE CYCLE : 500,000 CYCLE .

						UNIT	mm	MODE	TACT SWITCH WITH LED	WWW.SZLAKEVIEW.COM ELECTRONICS CO., LTD
V0	2016/7/20	JOHNSON	ALEN	MIKE	ORIGINAL DESIGN	SCALE	1 : 1	ANGLE TER	± 3°	
VER	DATE	APPROVAL	CONFIRM	DESIGN	ENGINEERING RECORD DESCRIPTION	PART	TL3-N1CBRG-AHWT	VIEW	PHONE	(86)755-29424722/29424733

1.一般特性 General Characteristics

1.1 额定值(Rating Value): DC30V 100mA[MAX] OR DC5V 1mA[MIN] .
1.2 工作温度(Work Temperature Range): -25℃ ~ 70℃
1.3 存贮温度(Store Temperature Range): -25℃ ~ 80℃
1.4 正常测试条件(未有特殊说明量测在以下条件进行):
General test condition (Tests and measurements shall be made under the following standard conditions unless otherwise specified):
正常温度: 5℃~35℃相对湿度: 45%~85% RH 气压: 8,600~10,600 帕
Temperature: 5℃~35℃ Relative humidity: 45%~85% Air pressure: 8,600~10,600 pa

2.产品外观及尺寸要求 Appearance & Dimension Requirement

2.1 产品外形结构紧凑,无配合不良.
The structure of product is compact, and assembly of parts has no badness.

2.2 产品塑胶部件无严重缩水、披锋、欠注、斑点、破损或变形现象.
The plastic parts of product have no serious defects such as very serious shrink, scarcity, fleck, disrepair, transmutation, etc.

2.3 产品引脚和外壳无严重氧化、脏污、变形、毛刺或电镀不良.
Lead feet and shell have no serious defects such as oxidation, smudge, disrepair, burr, defects on plating.

2.4 开关操作顺畅,节奏感强,无明显卡塞现象,(自锁开关锁芯锁住后,允许导芯倾斜正负 2°)
Operating switch is unhindered, rhythmed , and there is not palpable clag.(After the keystoke is locked, it is normal that the keystoke tilt to one side plus or minus 2 °)

2.5 产品结构及尺寸参见产品规格图纸。
Construction and dimensions: Refer to individual product drawing.

3.电气特性 Electronic Characteristics

No.	项目 Item	测试方法 Test Method	测试设备 Equipment	特性要求 Requirements
3.1	接触电阻 Contact Resistance	在低电流（≤100mA）条件下测试. Measured at low current (100mA or less).	低电阻测试仪 Low Resistance Meter	180Ω max
3.2	绝缘阻抗 Insulation Resistance	测试相邻引脚之间,引脚与外壳之间的绝缘阻抗(DC 100V). Measurement shall be made between adjacent terminals, between terminal and shell(DC 250V).	绝缘测试机 Insulation Resistance Tester	100MΩ min
3.3	耐压测试 Dielectric Withstand Voltage	输入一定电压(50-60Hz,电压值AC 250V)1 分钟,漏电流为 2mA,测试邻近端子间. Apply certain voltage (50-60Hz, AC 500V) for 1 minute between adjacent contacts of the connector with 2mA leakage sensitivity.	耐压测试机 Puncture Tester	没有绝缘破坏.电弧等异常. No arcing , break down and damaging insulation.

4.机械特性 Mechanical Characteristics

No.	项目 Item	测试方法 Test Method	测试设备 Equipment	特性要求 Requirements
4.1	操作力 Operation Force	逐渐施力操作开关按键，测量开关到达全部工作行程时所需的最大操作力度。 Operate the keystoke of the switch and then increase press strength gradually, Measured maximum operation force while the travel of the switch is full.	测力计 Force Gauge	125±50gf
4.2	行程 Full travel	垂直操作开关按键，量测开关顶端最大移动距离. Operate the keystoke of the switch vertically, the travel distance of keystoke moving from its free position to maximum moving distance shall be measurement.	游标卡尺 Vernier Caliper	1.35±0.3mm

5.可靠性测试 Reliability trial

No.	项目 Item	测试方法 Test Method	测试设备 Equipment	特性要求 Requirements
5.1	可焊性试验 Solder ability Test	端子顶部被浸入焊锡炉中，温度为 260±5℃，时间 5±1 秒. The top of the terminals shall be dipped in the solder bath at 260±5℃ for5±1 seconds.	控温锡炉 Solder Stove	引脚至少 95%上锡. Ninety-five percent of terminals shall be dipped.
5.2	寿命试验 Operation Life	开关在寿命试验设备上以约 90 次 / 分的速度连续被操作，具体次数见规格图示。 Switch shall be operated continuously at about 90 cycles /min without load.	寿命试验机 Life Tester	寿命：300,000 次 实验后： 绝缘电阻：10MΩ Min 操作力：变化在±50%内 开关外观及结构无损坏。 Life test:100,000cycles After test: Insulation resistance: 10MΩ Min Operating force: Change should be within ±50% of specified value. No abnormalities shall be recognized in appearance and construction.

5.可靠性测试 Reliability trial

No.	项目 Item	测试方法 Test Method	测试设备 Equipment	特性要求 Requirements
5.3	耐焊接热 Resistance to Soldering heat	端子焊接部分浸入焊炉，焊炉温度 260±5℃，焊接时间 5±1 秒。(焊接时不可于端子施加外力)。 Terminals shall be dipped in the solder bath at 260±5℃ for 5±1 seconds without additional force for terminals.	控温锡炉 Solder Stove	本体无变形，能满足于机械、电气性能. Appearance should be not damaged, electrical and mechanical characteristics shall be satisfied.
5.4	耐高温测试 Resistance to Heat Test	放置在温度 80±2℃环境中 96 小时后，再置于正常条件下 1 小时后测定。 The switch shall be stored at a temperature of 80±2℃ for 96 hours, Measurements shall be made after it be subjected to the standard conditions for 1 hour.	高低温试验机 High & Low Temperature Tester	外观，机械及电气性能均符合要求。 Appearance, electrical and mechanical characteristics shall be satisfied.
5.5	耐低温测试 Resistance to Cold Test	放置在温度-25±2℃环境中 96 小时后，再置于正常条件下 1 小时后测定。 The switch shall be stored at a temperature of -25±2℃ for 96 hours, Measurements shall be made after it be subjected to the standard conditions for 1 hour.	高低温试验机 High & Low Temperature Tester	外观，机械及电气性能均符合要求。 Appearance, electrical and mechanical characteristics shall be satisfied.
5.6	耐湿性测试 Resistance to Humidity Test	放置于温度 40±2℃,相对湿度为 90~96%环境中 96 小时后，再置于正常条件下 1 小时后测定(注意要擦去水滴)。 The switch shall be stored at a temperature of 40±2℃,relative humidity 90~96% for 96 hours, Measurements shall be made after it be subjected to the standard conditions for 1 hour (Wipe out water drip).	恒温恒湿箱 Temperature & Humidity Tester Chamber	外观，机械及电气性能均符合要求。 Appearance, electrical and mechanical characteristics shall be satisfied.
5.7	盐雾实验 Salt Mist Test	试件在下述实验后测量： 1．温度： 35±5°C 2．盐溶液浓度：5±1%（质量百分比）， 3．试验时间： 24 小时， 4．试验后，将盐沉积物用水冲掉。 The switch shall be checked after following test: 1.Temperature: 35±5°C 2.Salt solution: 5±1%(Solids by mass) 3.Duration: 24 hours, 4.After immersing, salt deposit shall be removed by running water.	盐雾试验机 Salt Spray Tester	在金属件上没有严重腐蚀斑点。 No remarkable corrosion shall be recognized in metal parts.

6. TL3 LED [常规品 LED 按此表格记录，如为客户特殊需求 LED 再单独提供]

LED Characteristics											
The electric specfications shown are determined at a basic temperature of 25℃ if the source voltage exceeds the rated voltage of LED,add last resistor must be connected in series with the LED											
Chip	Forward voltage VF(V) If=20mA				Peak Wave Length λp(nm)	Dominant Wave Length λdom(nm)	Absolute Maximun Rating				Viewing Angle 2Θ 1/2 (deg)
	VF(V)		IF(mcd) Or[lm][WHITE]								
Color	Typ	Max	Min	Typ			△λ nm	Pd mW	If mA	Peak If mA	
Super WHITE	2.9	3.3	4 lm	5 lm	0.28	0.29		78	20	100	
Super RED	1.8	2.2	400	600	640	620~630		50	30	100	
Super GREEN	3.0	3.3	600	1500	518	520~530		78	30	100	120
Super BLUE	3.0	3.4	100	200	450	455		78	30	100	
Super YELLOW	1.9	2.4	150	300	592	588~592		78	30	100	
Super	1.9	2.4	100	200	606	600~610		78	30	100	

ORANGE											
RED	2.0	2.2	100	200	630	625~630		120	30	100	
YELLOW	2.0	2.2	80	120	590	588~592		120	30	100	
RED	2.0	2.2	100	200	630	625~630		120	30	100	
GREEN	2.8	3.2	400	600	525	515~525		120	30	100	