Sep.1.2026 Copyright 2026 HIROSE ELECTRIC CO., LTD. All Rights Reserved.
In case of consideration for using Automotive equipment / device which demand high reliability, kindly contact our sales window correspondents.

ELV, RoHS COMPLIANT

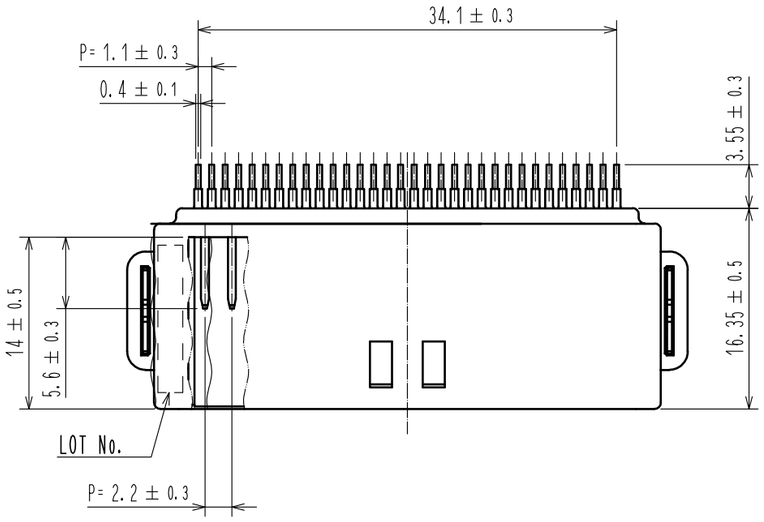

PIN ASSIGNMENT

16 32 15 31 14 30 13 29 12 28 11 27 10 26 9 25 8 24 7 23 6 22 5 21 4 20 3 19 2 18 1 17

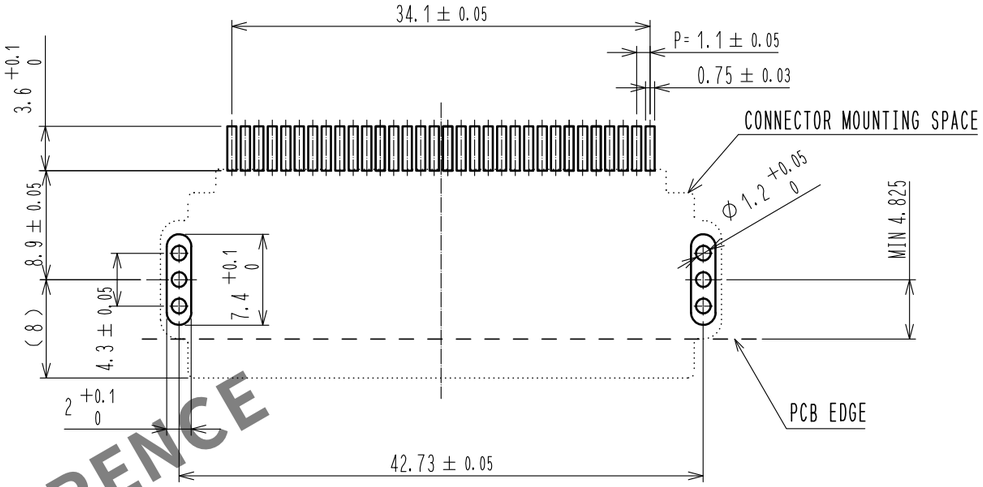

RECOMMENDED PCB PATTERN

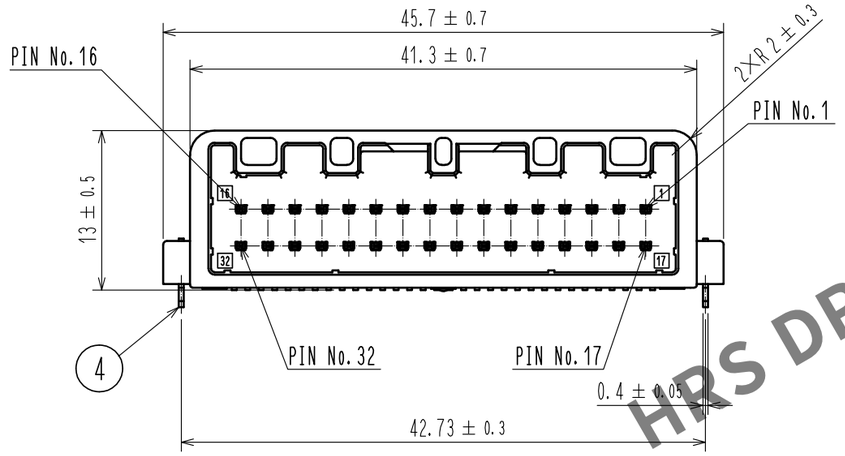

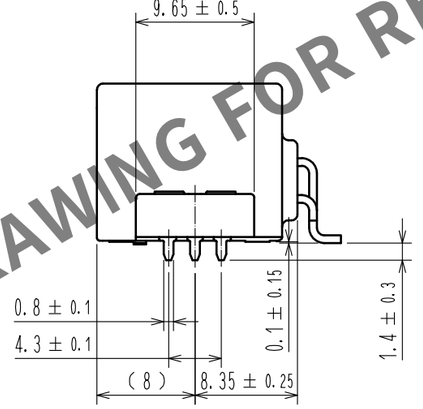

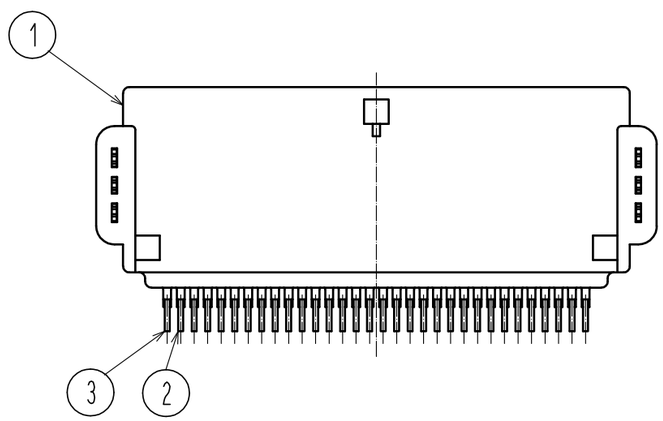

NOTE

1 RECOMMENDED TEMPERATURE PROFILE FOR REFLOW (REFER TO RIGHT FIG.)
USED REFLOW SYSTEM : IR IN THE AIR OR NITROGEN
NO. OF CYCLES : 2 MAX
PEAK : 250℃
OVER 230℃ : 20~40s
PREHEAT : 150~180℃ 60~120s

△3 2 DELETE

3 CO-PLANARITY OF PIN SHALL BE 0.1mm MAX.

4 RECOMMENDED PCB THICKNESS IS 1.6mm.

5 RECOMMENDED SOLDER THICKNESS IS 0.15mm.

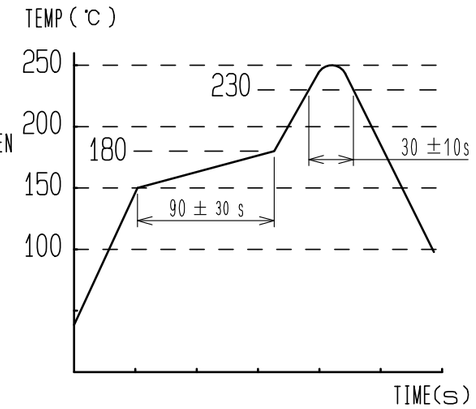

NO.	MATERIAL	FINISH , REMARKS	NO.	MATERIAL	FINISH , REMARKS
3	BRASS △3	CONTACT AREA,LEAD AREA:TIN PLATING 0.5μm min UNDER PLATING:NICKEL 0.5μm min	6	POLYESTER △3	
2	BRASS △3	CONTACT AREA,LEAD AREA:TIN PLATING 0.5μm min UNDER PLATING:NICKEL 0.5μm min	5	PS	
1	PA	BLACK	4	BRASS △3	LEAD AREA:TIN PLATING 0.5μm min UNDER PLATING:NICKEL 0.5μm min

UNITS	SCALE		COUNT	DESCRIPTION OF REVISIONS	DESIGNED	CHECKED	DATE
mm	2 : 1	△3	8	DIS-T-00024071	TY. IKEDA	TY. MOGI	20250528

HIROSE ELECTRIC CO., LTD.

APPROVED	AR. SHIRAI	20180530
CHECKED	HS. OZAWA	20180530
DESIGNED	YT. HAYAKAWA	20180530
DRAWN	DS. HIROWATARI	20180529

DRAWING NO. EDC-361159-10-00
PART NO. GT25H2-32DP-2.2H(10)
CODE NO. CL0775-0086-6-10 △3 1/2

HRS DRAWING FOR REFERENCE

Sep.1.2026 Copyright 2026 HIROSE ELECTRIC CO., LTD. All Rights Reserved.
In case of consideration for using Automotive equipment / device which demand high reliability, kindly contact our sales window correspondents.

PACKAGING SPECIFICATION

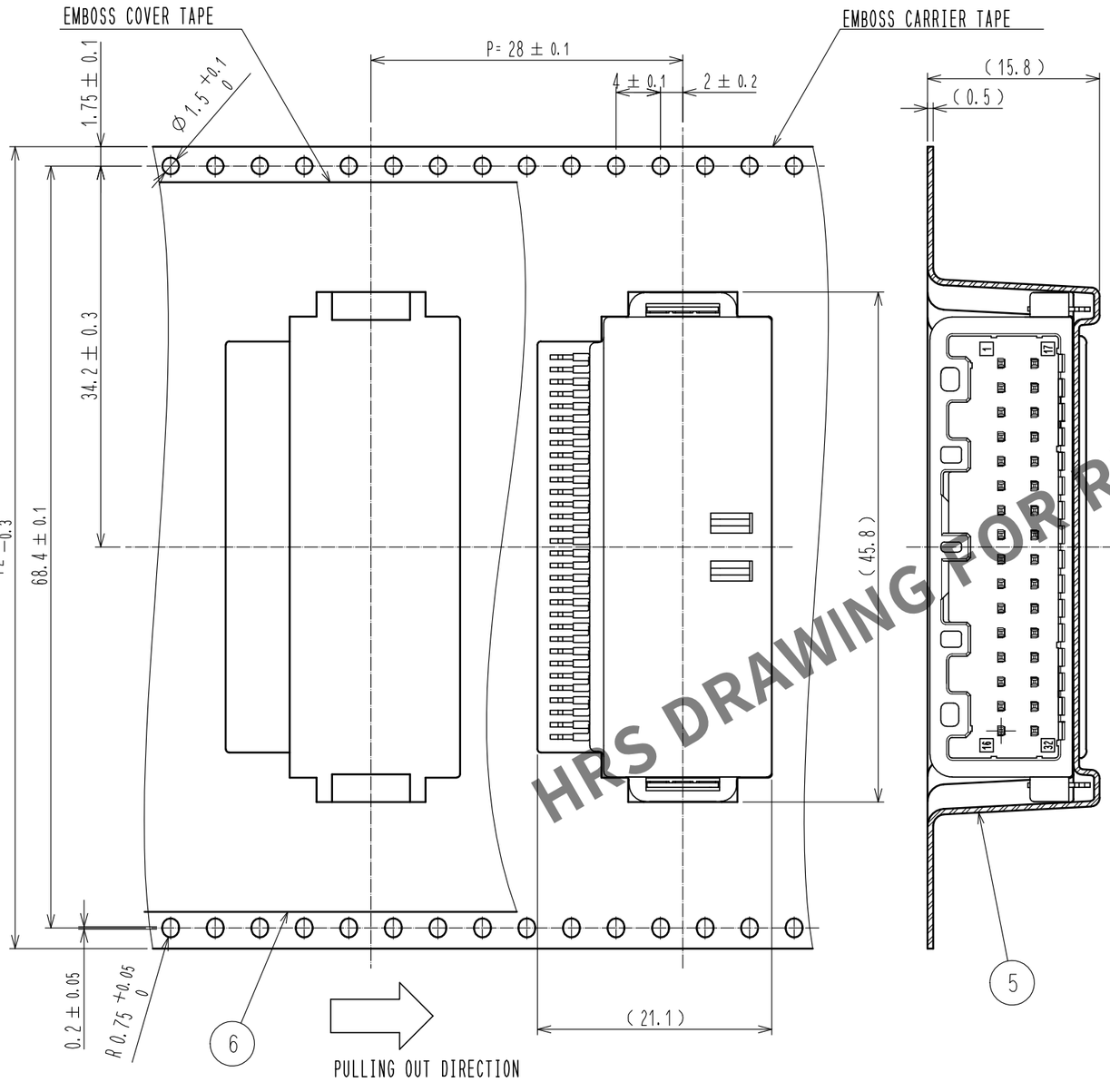

REEL DIMENSION (FREE)

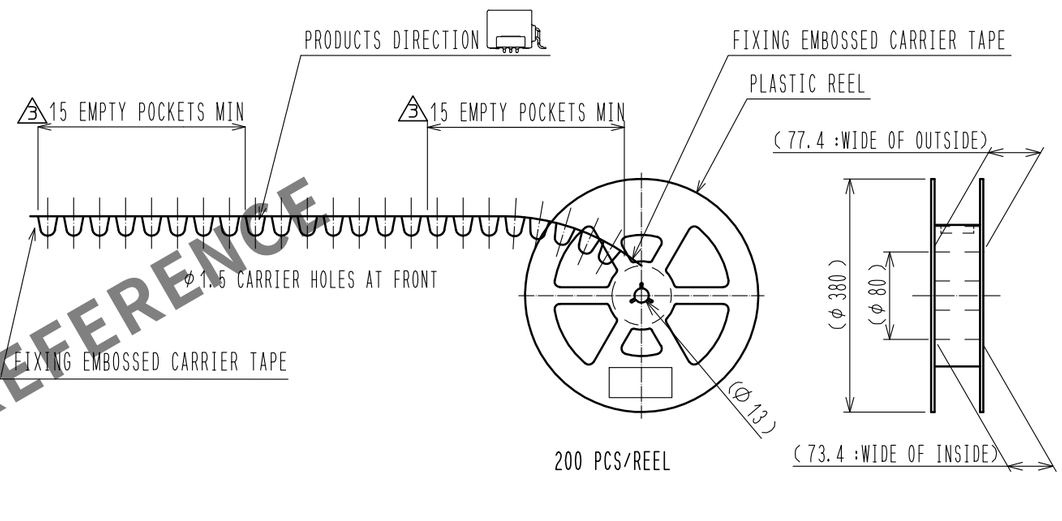

CARDBOARD DIMENSION(FREE)

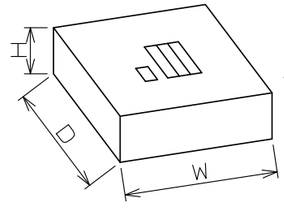

BOX SIZE
W=(405)(mm)
D=(405)(mm)
3 H=(79) (mm)

1REEL/BOX

HRS DRAWING FOR REFERENCE

HRS	DRAWING NO.	EDC-361159-10-00
	PART NO.	GT25H2-32DP-2.2H(10)
	CODE NO.	CL0775-0086-6-10

3 2/2