Customer's Name

TO.

DESIGN	CHECK	APPROVAL
Kang	LY ISSUED 2023-1-6 R&D DEPT	

Approval Sheet

DATE 2023-1-6

PART TL13-BB1Y1NN-R1W-WKO1

CONTENTS	
DESCRIPTION	**CUSTOMER'S APPROVAL**
Assembled Drawing	
Specification	
LED sheet	

告知信息：
此产品最终解释权单位为"深圳雷克维尔电子有限公司"，
因优化稳定性而产生的创新/改变/修正都是被允许的，
我们无法接受因为这些必须优化的因素而承担任何金钱或/和法律上的责任！

Tel: (86)755-2942 4722
Fax:(86)755-2942 4733

DIMENSION	TOLERANCE
BELOW 10 mm	± 0.25
10~50 mm	± 0.4
ABOVE 50 mm	± 0.7

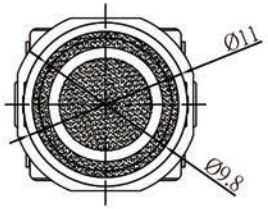

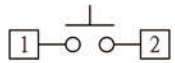

SW CIRCUIT

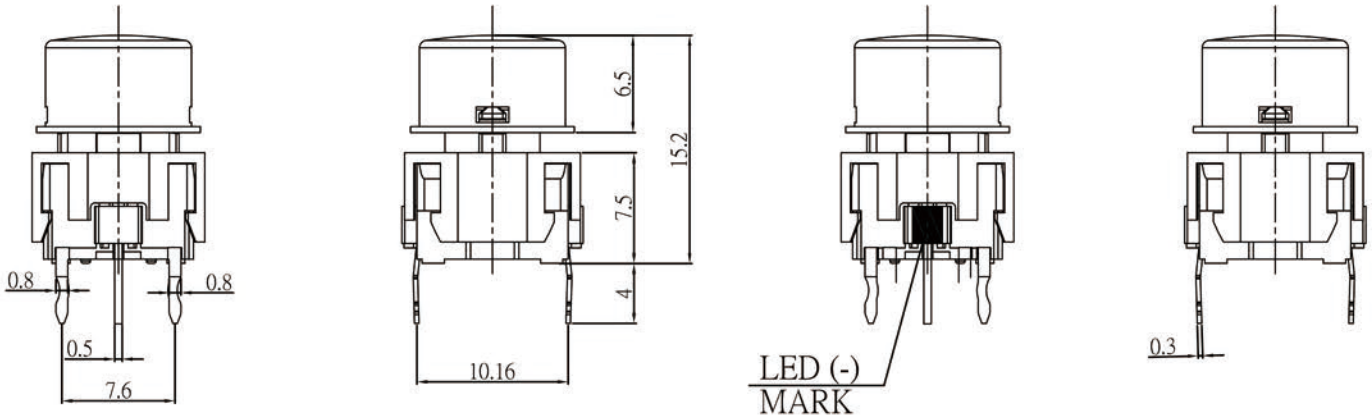

YELLOW

LED CIRCUIT

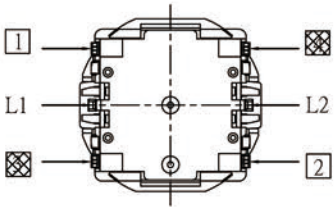

SPECIFICATION :

1. RATING : 12 VDC,50mA
2. CONTACT RESISTANCE : 100mΩ MAX(INITIAL)
3. INSULATION RESISTANCE:100MΩ MIN
4. BREAKDOWN VOLTAGE : 500 VAC FOR 1 MINUTE
5. OPERATING FORCE : 280±80gf
6. TOTAL TRAVEL : 0.85±0.3mm
7. OPERATING TEMPERATURE: -20˚C ~ 70˚C
8. LIFE CYCLE : 10,000,000 CYCLE

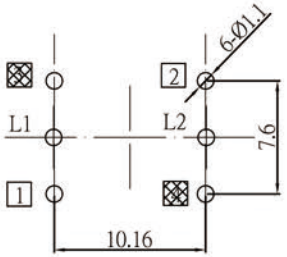

PCB LAYOUT

						UNIT	mm	MODE	TACT WITH LED SWITCH	WWW.SZLAKEVIEW.COM ELECTRONICS CO., LTD
V0	2015/7/25	JOHNSON	ALEN	MIKE	ORIGINAL DESIGN	SCALE	1 : 1	ANGLE TER	± 3˚	
VER	DATE	APPROVAL	CONFIRM	DESIGN	ENGINEERING RECORD DESCRIPTION	PART	TL13-BB1Y1NN-R1WT-WKO1		VIEW	PHONE (86)755-29424722/29424733

1.一般特性 General Characteristics

1.1 额定值(Rating Value): DC12V 50mA.

1.2 工作温度(Work Temperature Range): -20℃ ~ 70℃

1.3 存贮温度(Store Temperature Range): -45℃ ~ 85℃

1.4 正常测试条件(未有特殊说明量测在以下条件进行):

General test condition (Tests and measurements shall be made under the following standard conditions unless otherwise specified):

正常温度: 5℃~35℃相对湿度: 45%~85% RH 气压: 8,600~10,600 帕

Temperature: 5℃~35℃ Relative humidity: 45%~85% Air pressure: 8,600~10,600 pa

2.产品外观及尺寸要求 Appearance & Dimension Requirement

2.1 产品外形结构紧凑,无配合不良.

The structure of product is compact, and assembly of parts has no badness.

2.2 产品塑胶部件无严重缩水、披锋、欠注、斑点、破损或变形现象.

The plastic parts of product have no serious defects such as very serious shrink, scarcity, fleck, disrepair, transmutation, etc.

2.3 产品引脚和外壳无严重氧化、脏污、变形、毛刺或电镀不良.

Lead feet and shell have no serious defects such as oxidation, smudge, disrepair, burr, defects on plating.

2.4 开关操作顺畅,节奏感强,无明显卡塞现象,(自锁开关锁芯锁住后,允许导芯倾斜正负 2°)

Operating switch is unhindered, rhythmed , and there is not palpable clag.(After the keystoke is locked, it is normal that the keystoke tilt to one side plus or minus 2 °)

2.5 产品结构及尺寸参见产品规格图纸。

Construction and dimensions: Refer to individual product drawing.

3.电气特性 Electronic Characteristics

No.	项目 Item	测试方法 Test Method	测试设备 Equipment	特性要求 Requirements
3.1	接触电阻 Contact Resistance	在低电流（≤100mA）条件下测试. Measured at low current (100mA or less).	低电阻测试仪 Low Resistance Meter	100mΩ max
3.2	绝缘阻抗 Insulation Resistance	测试相邻引脚之间,引脚与外壳之间的绝缘阻抗(DC 500V). Measurement shall be made between adjacent terminals, between terminal and shell(DC 500V).	绝缘测试机 Insulation Resistance Tester	100MΩ min
3.3	耐压测试 Dielectric Withstand Voltage	输入一定电压(50-60Hz,电压值AC 500V)1 分钟,漏电流为 2mA,测试邻近端子间. Apply certain voltage (50-60Hz, AC 500V) for 1 minute between adjacent contacts of the connector with 2mA leakage sensitivity.	耐压测试机 Puncture Tester	没有绝缘破坏.电弧等异常. No arcing , break down and damaging insulation.

4.机械特性 Mechanical Characteristics

No.	项目 Item	测试方法 Test Method	测试设备 Equipment	特性要求 Requirements
4.1	操作力 Operation Force	逐渐施力操作开关按键，测量开关到达全部工作行程时所需的最大操作力度。 Operate the keystoke of the switch and then increase press strength gradually, Measured maximum operation force while the travel of the switch is full.	测力计 Force Gauge	280±80gf 350±100gf
4.2	行程 Full travel	垂直操作开关按键，量测开关顶端最大移动距离. Operate the keystoke of the switch vertically, the travel distance of keystoke moving from its free position to maximum moving distance shall be measurement.	游标卡尺 Vernier Caliper	0.85±0.3mm

5.可靠性测试 Reliability trial

No.	项目 Item	测试方法 Test Method	测试设备 Equipment	特性要求 Requirements
5.1	可焊性试验 Solder ability Test	端子顶部被浸入焊锡炉中，温度为 260±5℃，时间 5±1 秒. The top of the terminals shall be dipped in the solder bath at 260±5℃ for5±1 seconds.	控温锡炉 Solder Stove	引脚至少 95%上锡. Ninety-five percent of terminals shall be dipped.
5.2	寿命试验 Operation Life	开关在寿命试验设备上以约 90 次 / 分的速度连续被操作，具体次数见规格图示。 Switch shall be operated continuously at about 90 cycles /min without load.	寿命试验机 Life Tester	寿命：5,000,000 次 实验后： 绝缘电阻：10MΩ Min 操作力：变化在±50%内 开关外观及结构无损坏。 Life test:5,000,000cycles After test: Insulation resistance: 10MΩ Min Operating force: Change should be within ±50% of specified value. No abnormalities shall be recognized in appearance and construction.

5.可靠性测试 Reliability trial

No.	项目 Item	测试方法 Test Method	测试设备 Equipment	特性要求 Requirements
5.3	耐焊接热 Resistance to Soldering heat	端子焊接部分浸入焊炉，焊炉温度 260±5℃，焊接时间 5±1 秒。(焊接时不可于端子施加外力)。 Terminals shall be dipped in the solder bath at 260±5℃ for 5±1 seconds without additional force for terminals.	控温锡炉 Solder Stove	本体无变形，能满足于机械、电气性能. Appearance should be not damaged, electrical and mechanical characteristics shall be satisfied.
5.4	耐高温测试 Resistance to Heat Test	放置在温度 80±2℃环境中 96 小时后，再置于正常条件下 1 小时后测定。 The switch shall be stored at a temperature of 80±2℃ for 96 hours, Measurements shall be made after it be subjected to the standard conditions for 1 hour.	高低温试验机 High & Low Temperature Tester	外观，机械及电气性能均符合要求。 Appearance, electrical and mechanical characteristics shall be satisfied.
5.5	耐低温测试 Resistance to Cold Test	放置在温度-25±2℃环境中 96 小时后，再置于正常条件下 1 小时后测定。 The switch shall be stored at a temperature of -25±2℃ for 96 hours, Measurements shall be made after it be subjected to the standard conditions for 1 hour.	高低温试验机 High & Low Temperature Tester	外观，机械及电气性能均符合要求。 Appearance, electrical and mechanical characteristics shall be satisfied.
5.6	耐湿性测试 Resistance to Humidity Test	放置于温度 40±2℃,相对湿度为 90~96%环境中 96 小时后，再置于正常条件下 1 小时后测定(注意要擦去水滴)。 The switch shall be stored at a temperature of 40±2℃,relative humidity 90~96% for 96 hours, Measurements shall be made after it be subjected to the standard conditions for 1 hour (Wipe out water drip).	恒温恒湿箱 Temperature & Humidity Tester Chamber	外观，机械及电气性能均符合要求。 Appearance, electrical and mechanical characteristics shall be satisfied.
5.7	盐雾实验 Salt Mist Test	试件在下述实验后测量： 1．温度： 35±5°C 2．盐溶液浓度：5±1%（质量百分比）， 3．试验时间： 24 小时， 4．试验后，将盐沉积物用水冲掉。 The switch shall be checked after following test: 1.Temperature: 35±5°C 2.Salt solution: 5±1%(Solids by mass) 3.Duration: 24 hours, 4.After immersing, salt deposit shall be removed by running water.	盐雾试验机 Salt Spray Tester	在金属件上没有严重腐蚀斑点。 No remarkable corrosion shall be recognized in metal parts.

LED　4　脚

规格书

版本号:REV.02

日期:2018-05-30

1. Characteristic Parameter of RGB IC:

Color	Wave Length(nm)	Luminous Intensity(mcd)	Luminous Flux(lm)
Red	620-625	300-500	1.0-1.5
Green	515-530	1000-1500	3.0-4.0
Blue	460-470	200-400	0.5-1.0

2. Electric Parameter (Absolute rating, Ta=25℃,VSS=0V) :

Parameter	Symbol	Range	Unit
Voltage	V_{DD}	+3.5～+5.5	V
Logic Input Voltage	V_I	-0.5～VDD+0.5	V
Operating Temperature	Topt	-40~+85	℃
Storage Temperature	Tstg	-50~+150	℃
ESD Withstanding Voltage (Device Mode)	V_{ESD}	200	V
ESD Withstanding Voltage (Human Body Mode)	V_{ESD}	4K	V

3. Electric Parameter (Generally TA=-20～+70℃, VDD=4.5～5.5V,VSS=0V) :

Parameter	Symbol	Min	Typ	Max	Unit	Test Condition
Power Voltage Inside IC	V_{DD}	---	5.2	---	V	---
R/G/B Port Withstanding Voltage	$V_{DS,MAX}$	---	---	26	V	---
DOUT Drive Capability	ID_{OH}	---	49	---	mA	DOUT grounds, Max Driving Current
	ID_{OL}	---	-50	---	mA	DOUT connects anode, Max current
Rollover Threshold of Input Signal	V_{IH}	3.4	---	---	V	VDD=5.0V
	V_{IL}	---	---	1.6	V	
PWM Frequency	F_{PWM}	---	1.2	---	KHZ	---
Quiescent Dissipation	I_{DD}	---	1	---	mA	---

4. Dynamic Parameter（Ta=25℃）:

Parameter	Symbol	Min	Typ	Max	Unit	Test Condition
Data Transmission Rate	fDIN	---	800	---	KHZ	Duty Ratio 67%（Data 1）
DOUT Transmission Delay	T_{PLH}	---	---	500	ns	DIN→DOUT
	T_{PHL}	---	---	500	ns	
I_{out} Rise time	T_r	---	100	---	ns	V_{DS}=1.5V I_{OUT}=13mA
	T_f	---	100	---	ns	

5. Data Transmission Time:

Name of Timing Table		Min.	Actual Value	Max.	Unit
T	Element Cycle	1.20	--	--	μs
T0H	0, high level time	0.2	0.32	0.4	μs
T0L	0, low level time	0.8	0.88	1.0	μs
T1H	1, high level time	0.64	0.65	1.0	μs
T1L	1, low level time	0.2	0.55	0.56	μs
Trst	Reset, low level time	>80	--	--	μs

5.1 协议采用单极性归零码，每个码元必须有低电平，本协议的每个码元起始为高电平，高电平　时间宽度决定“0”码或“1”码。

5.2 书写程序时，码元周期最低要求为 1.2μs。

5.3 “0”码、“1”码的高电平时间需按照上表的规定范围，“0”码、“1”码的低电平 时间要求小于 20μs.

5.1 UNI-RZ(Unipolar Return-to-zero) is applied. There must be low level in each code element. In this agreement, each code element starts form high level, whose time width depends 0 code or 1 code.

5.2 Min element cycle would be 1.2μs when coding.

5.3 The high level time of 0 code and 1 code should be on the basis of the chart above. The low level time of 0 code and 1 code are required to be less than 20μs.

6. Timing Waveform（Ta=25℃）: Input Code Pattern:

Element Cycle

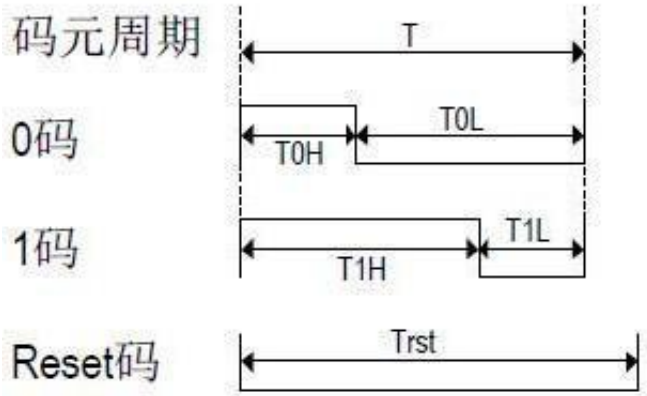

Connection Mathod 连接方式：

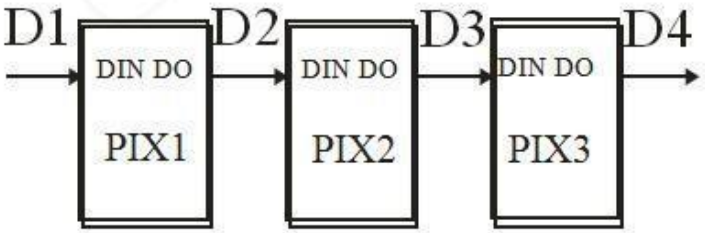

P.S: D1 is the data sent from MCU port, D2, D3, D4 are data automatically shaping forwarded by cascade circuit.

7. Data Transmission Method（Ta=25℃）:

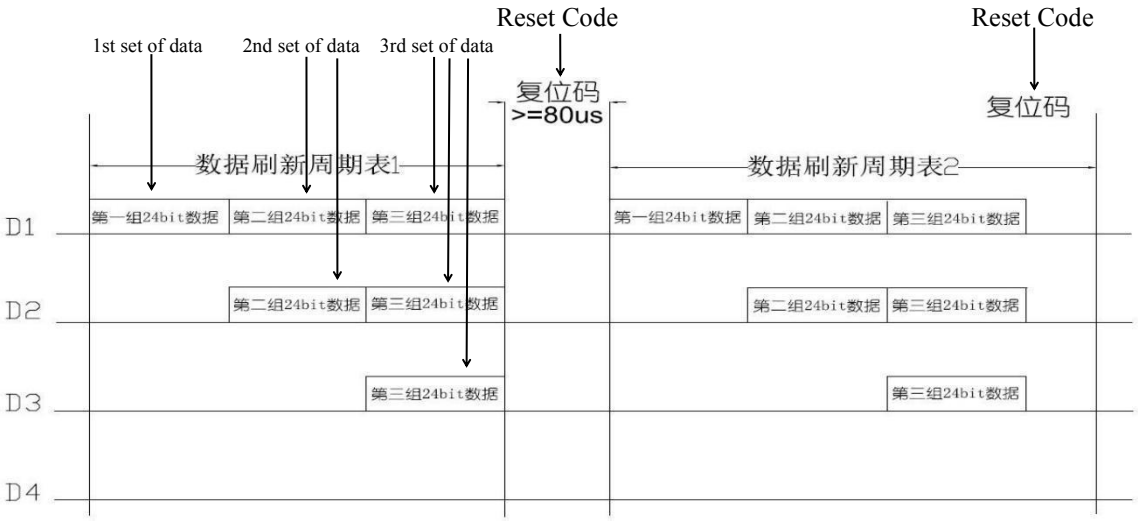

P.S: D1 is the data sent from MCU port, D2, D3, D4 are data automatically shaping forwarded by cascade circuit.

8. 24bit Data Structure（Ta=25℃）:

G7	G6	G5	G4	G3	G2	G1	G0	R7	R6	R5	R4
R3	R2	R1	R0	B7	B6	B5	B4	B3	B2	B1	B0

High level first，sending data in order of G,R,B(G7 → G6 →... B0)

9. Typical Application Circuit:

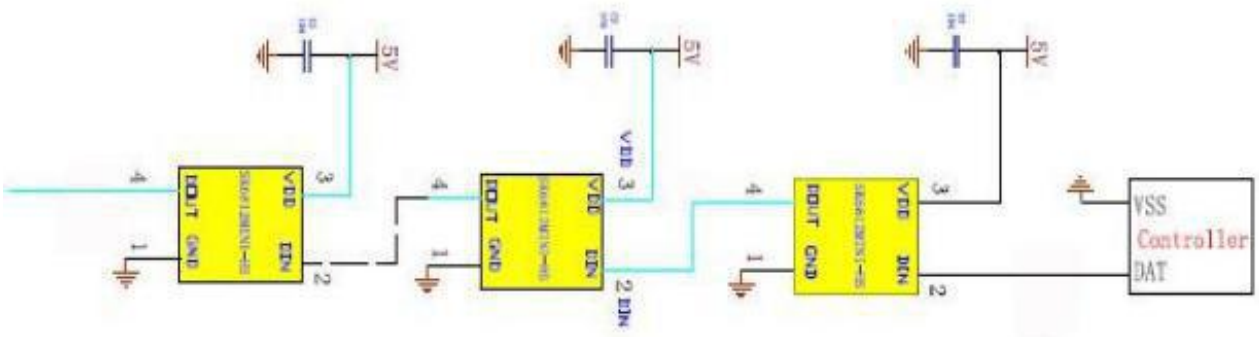

Each LED connects in parallel with a 0.1uF chip capacitor at its anode and cathode.