APS12753

Low-Voltage Micropower Latch For Automotive and Industrial Applications

FEATURES AND BENEFITS

- 2.2 to 5.5 V operation
- AEC-Q100 qualified
- Ultra-low power consumption (micropower)
- Omnipolar and unipolar latch threshold options
- Sleep time options
- High and low sensitivity magnetic latch point options
- Choice of output polarity
- Chopper stabilization
  - Low latch point drift over temperature
  - Insensitive to physical stress
- Push-pull output
- Solid-state reliability
- Industry-standard package and pinout

APPLICATIONS

- Battery-critical applications
- Brushless DC motors
- Medical equipment
- Doors, covers, lids, and tray position detection
- E-mobility
- Incremental rotary encoding
- Smart meters, flow meters
- Home appliances
- Automotive: power closures, in-cabin applications, wiper position, gear shift selectors, etc.

DESCRIPTION

The APS12753 micropower Hall-effect latch ICs are AEC-Q100 qualified for low-voltage applications. These sensors are temperature-stable and suited for operation over extended junction temperature ranges up to 165°C. This family of Hall-effect latches provides contactless control of a push-pull output, which actuates in response to a magnetic field applied to the branded package face. Additionally, the micropower logic allows ultra-low power consumption and operation from 2.2 to 5.5 V.

These devices are equipped with chopper stabilization, which reduces the residual offset typically caused by device overmolding, temperature dependencies, and thermal stress, allowing superior high-temperature performance.

The APS12753 is offered in package type MD-3, a standard 3-pin SOT23-3 surface-mount package. The package is lead (Pb) free.

PACKAGE

Not to scale

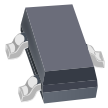

3-pin SOT23-3
(suffix MD)

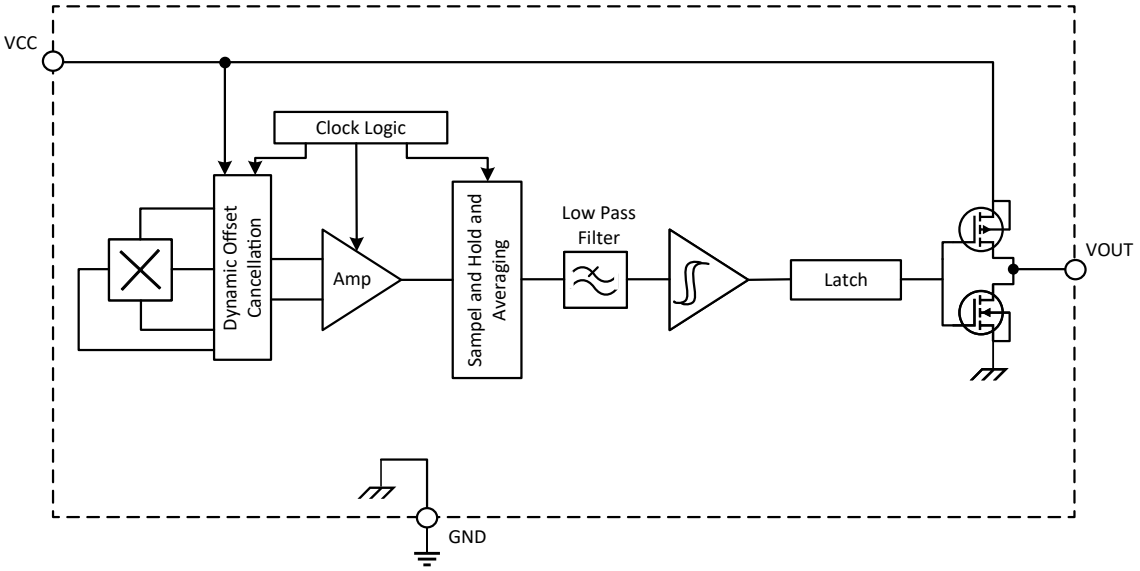

Figure 1: Functional Block Diagram

SELECTION GUIDE

Part Number [1]	Sleep Time (ms)	Average Supply Current (µA)	Typ. Latch Point Magnitude		Operating Temperature (°C)	Product Grade	Mounting	Packing [2]
			B_{OP} (G)	B_{RP} (G)				
APS12753KMDALX-0SL5	1.5	56	10	–10	–40 to 125	Industrial	3-pin SOT23-3 surface mount	Tape and Reel, 10,000 pieces per 13-inch reel
APS12753KMDALX-2SL5	50	4.4	20	–20				
APS12753LMDALX-0SL5	1.5	56	10	–10	–40 to 150	Automotive	3-pin SOT23-3 surface mount	Tape and Reel, 10,000 pieces per 13-inch reel
APS12753LMDALX-2SL5	50	4.4	20	–20				

[1] Contact Allegro MicroSystems for options not listed in the selection guide.
[2] Contact Allegro MicroSystems for additional packing options.

Complete Part Number Format

APS 12753 K M D A L X - 0 S L 0

Allegro Identifier (Device Family)
APS – Digital Position Sensor

Configuration Options

Micropower Period / Average I_{CC}
0 – 0 ms / 1.4 mA (typ.)*
1 – 1.5 ms / 56 µA (typ.)
2 – 3 ms / 30 µA (typ.)*
3 – 6 ms / 17 µA (typ.)*
4 – 24 ms / 6 µA (typ.)*
5 – 48 ms / 4.4 µA (typ.)
6 – 96 ms / 3.6 µA (typ.)*
7 – 192 ms / 3.1 µA (typ.)*

Output Polarity for B > B_{OP}
H – High*
L – Low

Operating Mode
S – Latch sensing

Device Switch Threshold
0 - $|B_{OP}|$ = 10 G; $|B_{RP}|$ = –10 G (typ.)
1 - $|B_{OP}|$ = 15 G; $|B_{RP}|$ = –15 G (typ.)*
2 - $|B_{OP}|$ = 20 G; $|B_{RP}|$ = –20 G (typ.)
3 - $|B_{OP}|$ = 30 G; $|B_{RP}|$ = –30 G (typ.)*
4 - $|B_{OP}|$ = 50 G; $|B_{RP}|$ = –50 G (typ.)*
5 - $|B_{OP}|$ = 95 G; $|B_{RP}|$ = –95 G (typ.)*
6 - $|B_{OP}|$ = 110 G; $|B_{RP}|$ = –110 G (typ.)*
7 - $|B_{OP}|$ = 160 G; $|B_{RP}|$ = –160 G (typ.) *
8 - $|B_{OP}|$ = 280 G; $|B_{RP}|$ = –280 G (typ.)*
9 - $|B_{OP}|$ = 400 G; $|B_{RP}|$ = –400 G (typ.)*

Instructions (Packing)
LX – Tape and reel, 10000 pieces per 13-inch reel

Package Designation
MDA – 3-pin SOT23-3 Surface Mount

Ambient Operating Temperature Range
K – -40°C to +125°C
L – -40°C to +150°C

e.g. APS12753KMDAXX-XXXX

APS12753KMDALX-0SL0

*Contact Allegro for availability.

Allegro MicroSystems
955 Perimeter Road
Manchester, NH 03103-3353 U.S.A.
www.allegromicro.com

ABSOLUTE MAXIMUM RATINGS

Characteristic	Symbol	Notes	Rating	Units
Supply Voltage	V_{CC}		6	V
Reverse Supply Voltage	V_{RCC}		–0.3	V
Output Current	I_{OUT}	Source or sink	±5	mA
Operating Ambient Temperature	T_A	Range K	–40 to 150	°C
Maximum Junction Temperature	$T_{J(max)}$		165	°C
Storage Temperature	T_{stg}		–65 to 170	°C

PINOUT DIAGRAM AND TERMINAL LIST
(VIEW FROM BRANDED FACE)

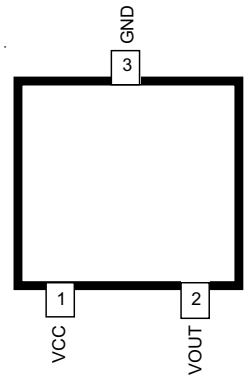

3-pin SOT23-3
(suffix MD)

Terminal List

Name	Description	Number
VCC	Connects power supply to chip	1
VOUT	Output from circuit	2
GND	Terminal for ground connection	3

TYPICAL APPLICATION CIRCUIT

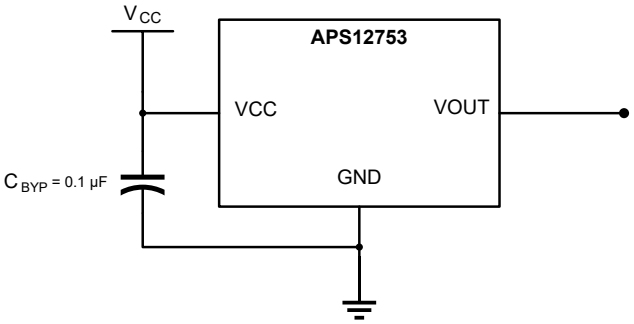

Figure 2: Typical Application Circuit

Allegro MicroSystems
955 Perimeter Road
Manchester, NH 03103-3353 U.S.A.
www.allegromicro.com

ELECTRICAL CHARACTERISTICS [1]: Valid over full operating voltage and ambient temperature ranges for $T_J < T_J$(max) and C_{BYP} = 0.1 µF, unless otherwise specified

Characteristics	Symbol	Test Conditions	Min.	Typ. [2]	Max.	Unit
SUPPLY AND STARTUP						
Supply Voltage	V_{CC}	Operating, T_J < 165°C	2.2	–	5.5	V
Supply Current	$I_{CC(AVG)}$ [3]	-xxx5 option: 48 ms sleep period	–	4.4	11.5	µA
		-xxx1 option: 1.5 ms sleep period	–	56.4	251.8	µA
	$I_{CC(AWAKE)}$	Device is awake, V_{CC} = 2.2 V	–	1	1.5	mA
		Device is awake, V_{CC} = 3.5 V	–	1.4	2.3	mA
		Device is awake, V_{CC} = 5.5 V	–	2.2	3.5	mA
	$I_{CC(SLEEP)}$	Device is asleep	–	2.7	6	µA
Power-On State [4]	POS	$t < t_{PO}$, $V_{CC} \geq V_{CC(min)}$		Low		–
Power-On Time [4]	t_{PO}	$V_{CC} \geq V_{CC(min)}$	–	60	100	µs
MICROPOWER OPERATION (See Figure 6)						
Awake	t_{AWAKE}		–	–	60	µs
Sleep	t_{SLEEP}	-xxx5 option	25	48	90	ms
		-xxx1 option	0.5	1.5	2.5	ms
CHOPPER STABILIZATION AND OUTPUT CHARACTERISTICS						
Chopping Frequency	f_c		–	250	–	kHz
Output Saturation Voltage	$V_{OUT(SAT)HIGH}$	I_{OUT} = 1 mA (sink)	V_{CC} – 300	V_{CC} – 150	–	mV
	$V_{OUT(SAT)LOW}$	I_{OUT} = 1 mA (source)	–	150	300	mV
Supply Slew Rate	SR		20	–	–	V/ms

[1] Temperature performance is guaranteed by design and characterization.
[2] Typical data is at T_A = 25°C and V_{CC} = 3.5 V unless otherwise noted.
[3] I_{CC} average is calculated with the equation:

$$\frac{I_{CC(awake)} \times t_{awake} + I_{CC(sleep)} \times t_{sleep}}{t_{awake} + t_{sleep}}$$

[4] Guaranteed by device design and characterization; not tested in final production.

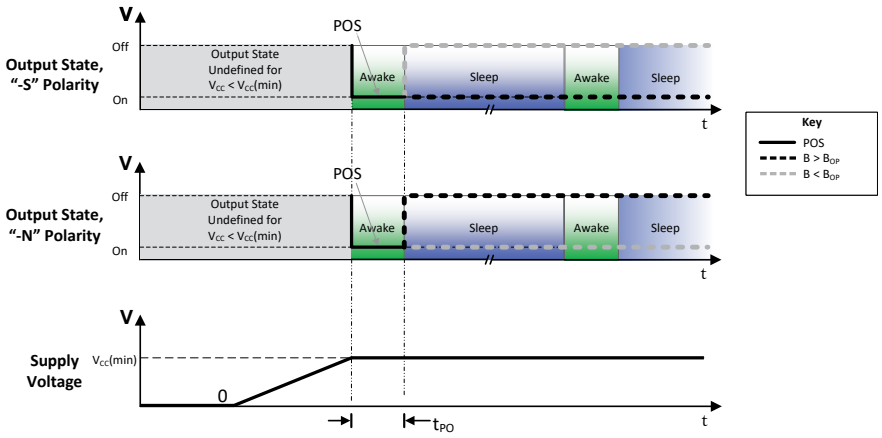

Figure 3: Device Power-on Behavior ("L" Polarity Shown)
The output remains latched in the last sampled state during the sleep time (output on or output off).

Allegro MicroSystems
955 Perimeter Road
Manchester, NH 03103-3353 U.S.A.
www.allegromicro.com

MAGNETIC SWITCH CHARACTERISTICS [1]: Valid over full operating voltage and ambient temperature ranges for $T_J < T_J(max)$ and C_{BYP} = 0.1 µF, unless otherwise specified

Characteristics	Symbol	Test Conditions	Min.	Typ. [2]	Max.	Unit [3]
Operate Point	B_{OP}	-0xx Option	1	10	20	G
		-2xx Option	5	20	35	G
Release Point	B_{RP}	-0xx Option	–20	–10	–1	G
		-2xx Option	–35	–20	–5	G
Hysteresis	B_{HYS}	-0xx Option	2	20	40	G
		-2xx Option	10	40	70	G

[1] Temperature performance is guaranteed by design and characterization.
[2] Typical data is at T_A = 25°C and Vcc = 3.5 V, unless otherwise noted.
[3] Magnetic flux density, B, is indicated as a negative value for north-polarity magnetic fields, and a positive value for south-polarity magnetic fields.

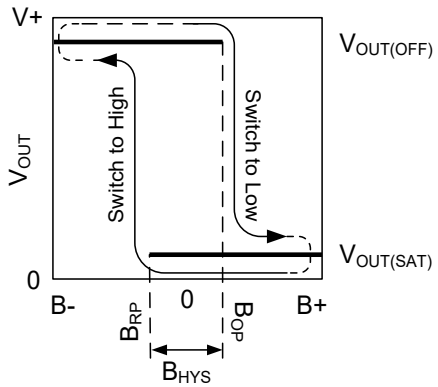

Figure 4: Hall Latch Output State vs. Magnetic Field

B- indicates increasing north polarity magnetic field strength, and B+ indicates increasing south polarity magnetic field strength.

Allegro MicroSystems
955 Perimeter Road
Manchester, NH 03103-3353 U.S.A.
www.allegromicro.com

PACKAGE THERMAL CHARACTERISTICS: Device power consumption is extremely low. On-chip power dissipation is not an issue under typical operating conditions.

Characteristic	Symbol	Test Conditions	Value	Units
Package Thermal Resistance	$R_{\theta JA}$	Package MD, 2-layer PCB (1S0P)	331.5	°C/W
		Package MD, 4-layer PCB (2S2P)	203.6	°C/W

Allegro MicroSystems
955 Perimeter Road
Manchester, NH 03103-3353 U.S.A.
www.allegromicro.com

APS12753-2SL5 CHARACTERIZATION PLOTS

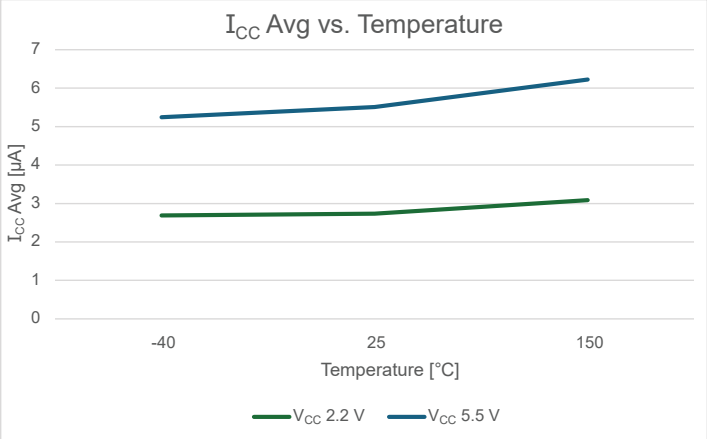

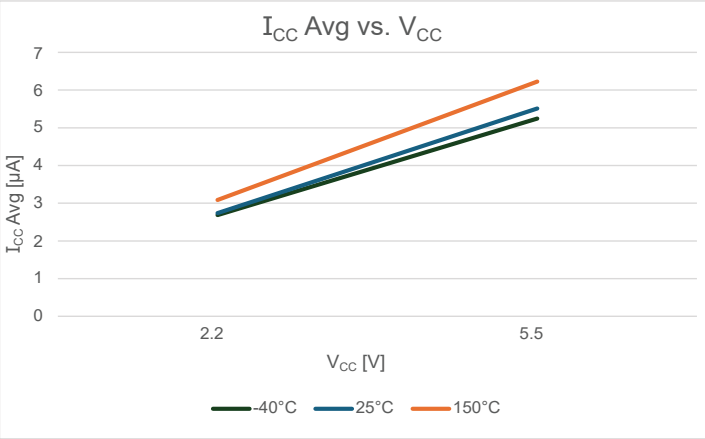

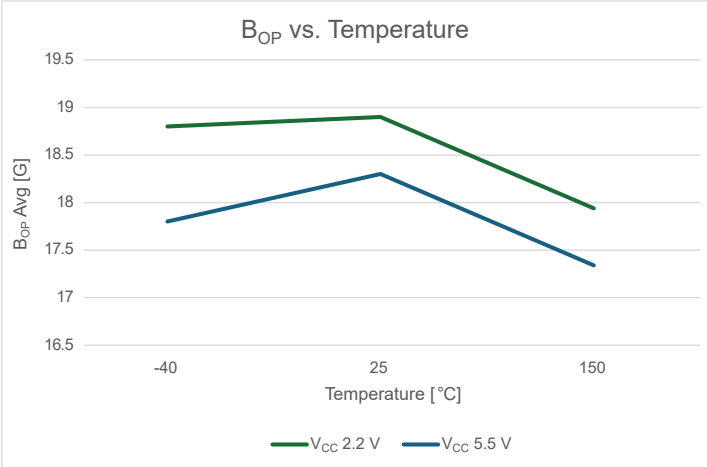

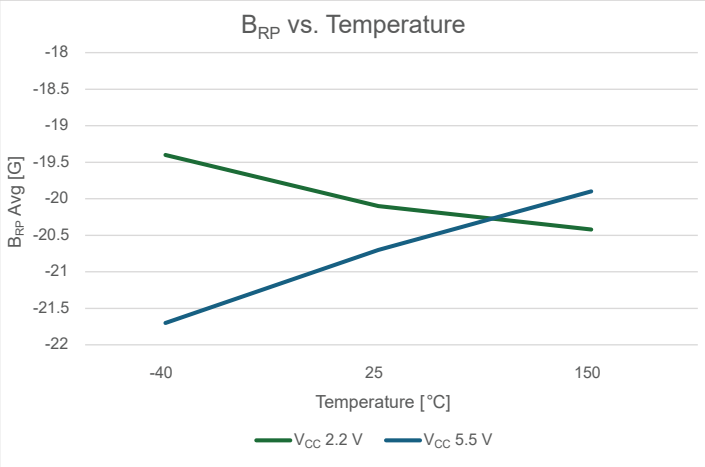

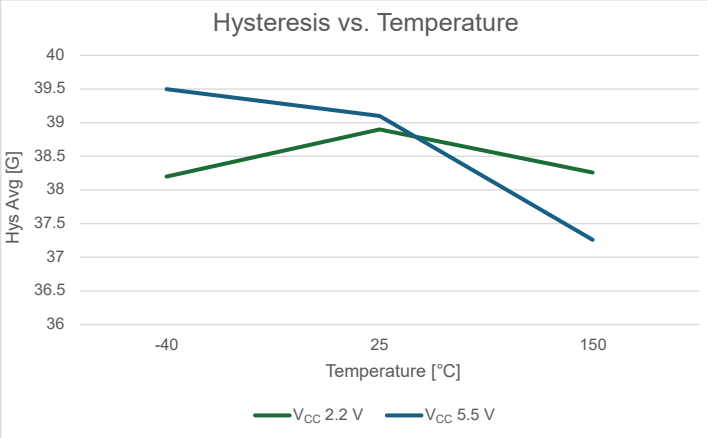

Allegro MicroSystems
955 Perimeter Road
Manchester, NH 03103-3353 U.S.A.
www.allegromicro.com

FUNCTIONAL DESCRIPTION

Operation

The APS12753 is an integrated Hall-effect sensor IC with a latch output. The output is a push-pull configuration that actuates in response to a magnetic field applied to the branded package face (Figure 4). The devices are offered in a package with a 3-pin surface-mount configuration. For a complete list of available options, see the Selection Guide.

The difference in the magnetic operate and release points is the hysteresis, B_{HYS}, of the device. This built-in hysteresis allows clean latching of the output even in the presence of external mechanical vibration and electrical noise.

Powering-on the device in the hysteresis range (less than B_{OP} and greater than B_{RP}) gives an output state of $V_{OUT(OFF)}$. In this case, the correct state is attained after the first excursion beyond B_{OP} or B_{RP}.

Figure 5: Magnetic Sensing Orientations

Allegro MicroSystems
955 Perimeter Road
Manchester, NH 03103-3353 U.S.A.
www.allegromicro.com

Low Average Power

The built-in micropower control periodically activates the Hall latch circuitry for a short period of time (t_{AWAKE}), and deactivates it for the remainder of the period (t_{PERIOD}). For an example of the system timing, see Figure 6. The short-duration awake state allows for sensor stabilization prior to sampling the Hall latch and latching the state on the output. The output is latched on the falling edge of the timing pulse and held in the last sampled state during the sleep period; updates to the output only occur on the falling edge of the timing pulse. The micropower control operates independently of the output driver state. At initial power-on, the APS12753 samples a t_{AWAKE} cycle before the first t_{SLEEP} cycle (see Figure 6).

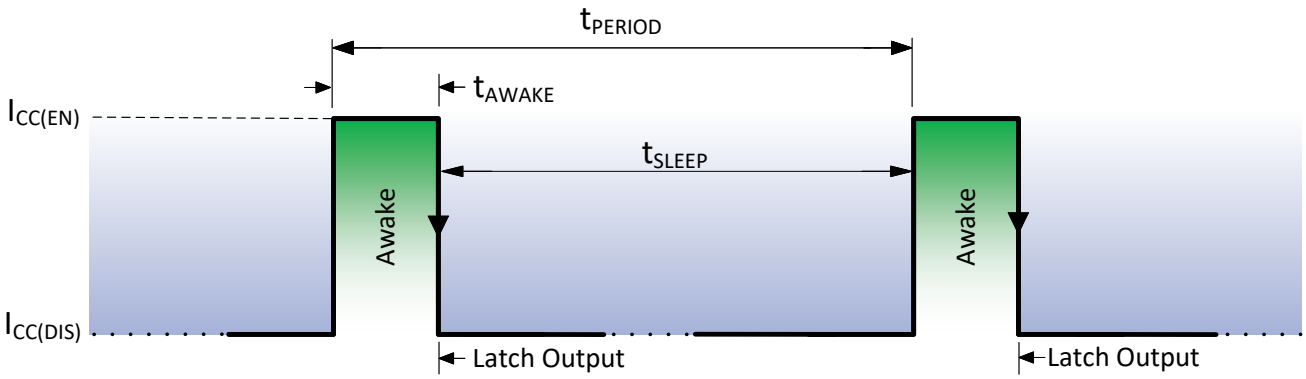

Figure 6: Micropower Operation

Allegro MicroSystems
955 Perimeter Road
Manchester, NH 03103-3353 U.S.A.
www.allegromicro.com

CHOPPER STABILIZATION

A limiting factor for latch point accuracy when using Hall-effect technology is the small signal voltage developed across the Hall plate. This voltage is proportionally small relative to the offset that can be produced at the output of the Hall sensor. This makes it difficult to process the signal and maintain an accurate, reliable output over the specified temperature and voltage range. Chopper stabilization is a proven approach used to minimize Hall offset.

The Allegro technique, dynamic quadrature offset cancellation, removes key sources of the output drift induced by temperature and package stress. This offset-reduction technique is based on a signal modulation-demodulation process that is implemented as illustrated in Figure 7.

The undesired offset signal is separated from the magnetically induced signal in the frequency domain through modulation. The subsequent demodulation acts as a modulation process for the offset, causing the magnetically induced signal to recover its original spectrum at baseband while the DC offset becomes a high-frequency signal. Then, using a low-pass filter, the signal passes while the modulated DC offset is suppressed. The Allegro chopper-stabilization technique uses a high-frequency clock.

The high-frequency operation allows a greater sampling rate that produces higher accuracy, reduced jitter, and faster signal processing. Additionally, filtering is more effective and results in a lower-noise analog signal at the sensor output. Devices such as the APS12753 that use this approach have an extremely stable quiescent Hall output voltage, are immune to thermal stress, and have precise recoverability after temperature cycling. This technique is made possible through the use of a BiCMOS process that allows the use of low-offset and low-noise amplifiers in combination with high-density logic and sample-and-hold circuits.

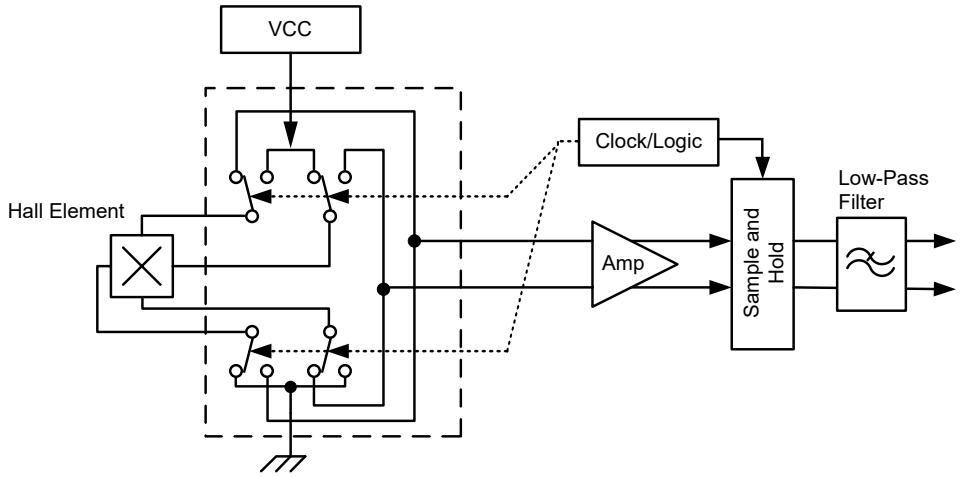

Figure 7: Model of Chopper Stabilization Circuit (Dynamic Offset Cancellation)

Allegro MicroSystems
955 Perimeter Road
Manchester, NH 03103-3353 U.S.A.
www.allegromicro.com

PACKAGE OUTLINE DRAWING

For Reference Only – Not for Tooling Use

(Reference Allegro DWG-0000930)
NOT TO SCALE
Dimensions in millimeters
Dimensions exclusive of mold flash, gate burrs, and dambar protrusions
Exact case and lead configuration at supplier discretion within limits shown

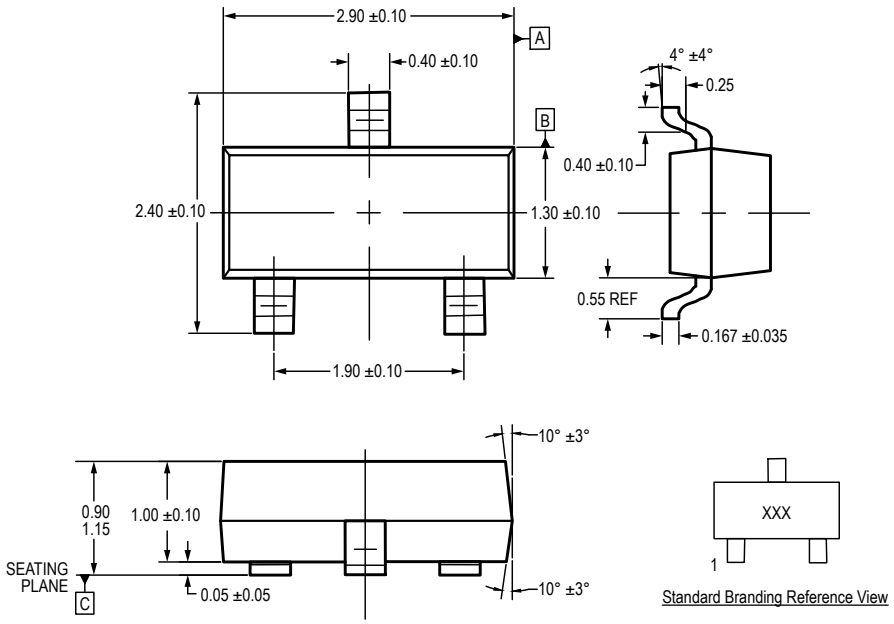

Figure 8: Package MD, 3-Pin SMD (SOT23-3)

Allegro MicroSystems
955 Perimeter Road
Manchester, NH 03103-3353 U.S.A.
www.allegromicro.com

REVISION HISTORY

Number	Date	Description
–	September 24, 2024	Initial release
1	October 17, 2024	Updated title, features and benefits, and description (page 1), selection guide (page 2), absolute maximum ratings table (page 3), and characterization plots (page 7).
2	December 6, 2024	Updated Complete Part Number Format schematic (page 2)
3	January 8, 2025	Updated selection guide (page 2)
4	August 11, 2025	Added automotive variants and selection guide (headings, and pages 1 and 2), updated operating ambient temperature (page 3), and updated characterization plots (pages 7), and made minor editorial changes throughout.
5	November 21, 2025	Updated pinout diagram (page 3)

Copyright 2025, Allegro MicroSystems.
Allegro MicroSystems reserves the right to make, from time to time, such departures from the detail specifications as may be required to permit improvements in the performance, reliability, or manufacturability of its products. Before placing an order, the user is cautioned to verify that the information being relied upon is current.
Allegro's products are not to be used in any devices or systems, including but not limited to life support devices or systems, in which a failure of Allegro's product can reasonably be expected to cause bodily harm.
The information included herein is believed to be accurate and reliable. However, Allegro MicroSystems assumes no responsibility for its use; nor for any infringement of patents or other rights of third parties which may result from its use.
Copies of this document are considered uncontrolled documents.

For the latest version of this document, visit our website:
www.allegromicro.com

Allegro MicroSystems
955 Perimeter Road
Manchester, NH 03103-3353 U.S.A.
www.allegromicro.com