Features

- Wide operating voltage (V_{1mA}) range from 47V to 1800V.
- Fast responding to transient over-voltage.
- Large absorbing transient energy capability.
- Low clamping ratio and no following-on current.

General Information

- Surge protection in consumer electronics
- Surge protection in industrial electronics
- Relay and electromagnetic valve surge absorption
- Transistor, diode, IC, thyristor or triac semiconductor protection
- Surge protection in electronic home appliances, gas and petroleum appliances

General Characteristics

- Body: Nickel Plated
- Devices with No Leads: Nickel Plated
- Operating Temperature: -40ºC to + 85ºC
- Storage Temperature: -40 ºC to + 125ºC
- Axial Devices: Tin Plated

Part Number Code

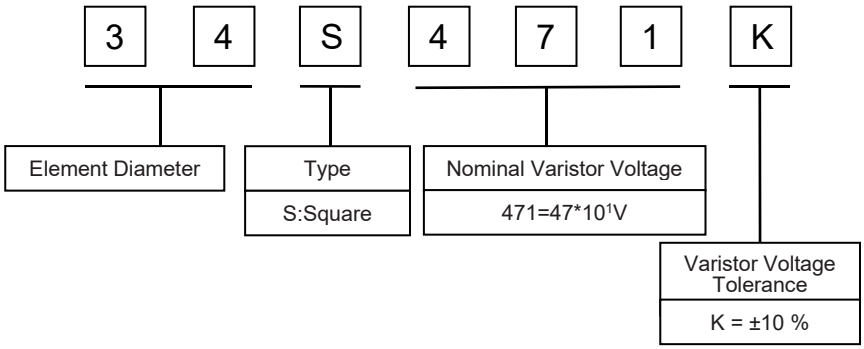

Electrical Characteristics

Type Number	Varistor Voltage	Max. Allowable Voltage		Max. Energy (10/1000μs)	Max. Clamping Voltage (8/20μs)		Max. Peak Current (8/20μs)	Typical Capacitance (Reference)
	V_{1mA}(V)	V_{AC}(V)	V_{DC}(V)	(J)	I_P(A)	V_C(V)	I(A)	@1KHz(pf)
34S470K	42~52	30	38	96	60	93	20000	35000
34S560K	50~63	35	45	115	60	110	20000	29500
34S680K	61~75	40	56	136	60	135	20000	24200
34S820K	74~90	50	65	156	300	135	30000	17950
34S101K	90~110	60	85	195	300	165	40000	15000
34S121K	108~132	75	100	235	300	200	40000	12200
34S151K	135~165	95	125	296	300	250	40000	10000
34S181K	162~198	115	150	350	300	300	40000	8250
34S201K	185~225	130	170	400	300	340	40000	6750
34S221K	198~242	140	180	450	300	360	40000	6400
34S241K	222~270	150	200	480	300	395	40000	5650
34S271K	256~310	180	225	540	300	455	40000	5100
34S301K	270~330	190	250	600	300	500	40000	4510
34S331K	297~363	210	275	656	300	550	40000	4150
34S361K	324~396	230	300	745	300	595	40000	3750
34S391K	362~440	250	320	830	300	650	40000	3500
34S431K	387~473	275	350	920	300	710	40000	2950
34S471K	423~517	300	385	1000	300	775	40000	2880
34S511K	459~561	320	415	1060	300	845	40000	2650
34S561K	504~616	350	460	1150	300	925	40000	2450
34S621K	558~682	385	505	1250	300	1025	40000	2200
34S681K	612~748	420	560	1250	300	1120	40000	2000
34S751K	675~825	460	615	1280	300	1240	40000	1820
34S781K	702~858	485	640	1350	300	1290	40000	1750
34S821K	738~902	510	670	1395	300	1355	40000	1650
34S911K	819~1001	550	745	1475	300	1500	40000	1500
34S951K	855~1045	575	760	1485	300	1570	40000	1430
34S102K	900~1100	625	825	1550	300	1650	40000	1350
34S112K	990~1210	680	895	1700	300	1815	40000	1230
34S122K	1150~1320	750	980	1750	300	1980	40000	1135
34S142K	1315~1540	850	1120	1750	300	2310	40000	970
34S162K	1550~1760	1000	1320	2000	300	2640	40000	840
34S182K	1700~1980	1100	1485	2000	300	2970	40000	800

Soldering Recommendation

Wave Lead Free Soldering Recommendation

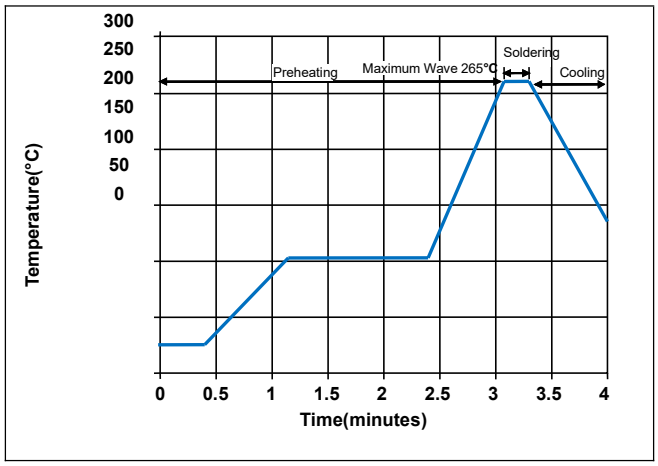

Item	Conditions
Peak Temperature	265ºC
Dipping Time	10 seconds (max.)
Soldering	1 time

Recommendation Reworking Conditions with Soldering Iron

Item	Conditions
Temperature of Soldering Iron-tip	360ºC (max.)
Soldering Time	3 seconds (max.)
Distance from Varistor	2mm (min.)

Dimensions

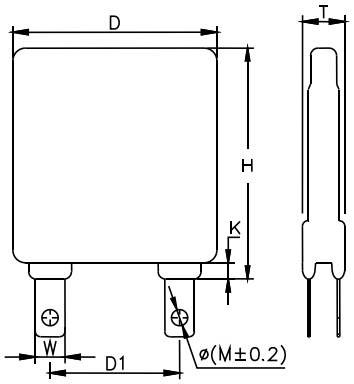

TABLE 1		
Symbol	**Millimeters**	**Inches**
H(max)	40	1.575
D(max)	36	1.417
D1(±1.0)	25.4	1.00
T(max)	TABLE 2	
K(max.)	5.0	0.197
W	7.0x0.5	0.276x0.02
(M±0.2)	3.0	0.118

TABLE 2---T(max.)

Model	Millimeters	Inches	Model	Millimeters	Inches	Model	Millimeters	Inches
470k	6.5	0.256	301K	7.1	0.28	751K	10.0	0.394
560K	6.8	0.268	331K	7.3	0.287	781K	10.2	0.402
680K	7.2	0.283	361K	7.6	0.299	821K	10.8	0.425
820K	5.9	0.232	391K	7.8	0.307	911K/102K	11.2	0.441
101K	6.1	0.240	431K	8.0	0.315	951K	11.0	0.433
121K/181K	6.3	0.248	471K	8.3	0.327	112K	12.3	0.484
151K/221K	6.6	0.26	511K	8.7	0.343	122K	13.0	0.512
201K	6.4	0.252	561K	9.0	0.354	142K	14.3	0.563
241K	6.7	0.264	621K	9.4	0.37	162K	13.3	0.524
271K	6.9	0.272	681K	9.5	0.374	182K	14.2	0.559

安全注意事项
SAFETY PRECAUTIONS

使用压敏电阻器时，压敏电阻器周围条件（设备设计中的材料、环境、电源条件、电路条件等）发生异常时，则可能引发火灾、触电、烧伤、以及产品故障。

In case that a varistor is used, if an abnormality takes place because of peripheral conditions of the varistor(material, environments,power source conditions, circuit conditions, etc. In equipment design), fire, electric shock, burn, or product failure may be occur.

下列内容为使用时的相关注意事项，请认真确认后再行使用。如对未及事项有疑议，请速与我公司担当部门联系。

The precautions for this product are described below; understand the content thoroughly before usage. For more questions,contact us.

1 严格遵守事项

Precautions to be strictly observed

1.1 额定性能确认

Confirmation of performance ratings

请遵守压敏电阻器的最大连续工作电压，耐冲击电流、最大能量耐量、浪涌寿命、额定功率和操作温度范围等额定性能的规定，在规定范围内使用。

Use the varistor within its rated range of performance such as the maximum continuous operating voltage, withstanding surge current, maximum energy, impulse life, rated power and operating temperature range。

超出规定范围使用，则会造成压敏电阻器性能劣化，破坏元件，严重可引起压敏电阻器冒烟或起火。

If used outside the range, the varistor can be degrade and have element fracture, which may result in smoking and ignition.

1.2 为避免意外现象发生，请采用如下对策

To avoid accidents due to unexpected phenomena, take the following measures

1）压敏电阻器受损时，可能出现破碎飞散，因此要对集成产品加保护盖或外盒。

In the event of fracture of the varistor, its pieces may scatter; hence, put the case or cover of the set product in place.

2）请勿安装在可燃物品（塑料电线、树脂合成物等）附近。若无法避免，请使用不燃性保护外壳。

Do not install the varistor near combustible substances (polyvinyl chloride wires, resin moldings, etc.). If it’s difficult to do, install a nonflammable cover.

3）线间使用

Across-the-line use

在线间使用时，将保险丝与压敏电阻器串联。

When the varistor is used across a line, put a current fuse in series with the varistor.

4）线-地间使用

Use between line to ground

a) 在线-地间使用时，压敏电阻器短路时会产生接地电阻，电流保险丝不会熔断，可能引起压敏电阻器外涂层树脂冒烟或起火。
If the case that the varistor is used between a line to the ground, the short circuit of the varistor may not blow the current fuse because of grounding resistance, which may cause smoking and ignition of the varistors exterior resin.
为避免上述情况，请在电源端安装漏电断路器。如无漏电断路器，则需将电流保险丝与温度保险丝串联使用。

As the measure against it, install an earth leakage breaker on the power supply side of the varistor position. If no earth leakage breaker is installed, use a thermal fuse together with a current fuse in series.

b) 在带电部件与金属部件之间使用压敏电阻器时，压敏电阻器短路时有触电危险，故请将金属部件接地或勿与人体接触。

If the case that the varistor is used between a live parts to metal case, an electric shock may develop at a shortcircuit of the varistor; hence, ground the metal case to the ground or keep it from the human body.

2 使用注意事项

Application notes

2.1 注意下列事项，可能导致压敏电阻器寿命缩短或引发故障

Pay attention to the following items to avoid the shortened life and failure of the varistor.

1）电路条件

Circuit conditions

a) 选定的压敏电阻器的电压最大值在最大连续工作电压值之上。

Select a varistor of which the maximum voltage including fluctuations in source voltage allows for the maximum permissible circuit voltage.

b) 短间隔性地施加浪涌时（施加抗干扰模拟试验电压时）不可超过压敏电阻器的额定功率。

In cases that surges are intermittently applied at short intervals (for example, in case that the voltage of the noise simulator test is implemented etc.

c) 选定压敏电阻器时，须按照表 1 的标准产品型号。

Select a varistor recommended in table 1.

① 线间使用

Across-the-line use

单相三线式连线时单独配线负荷导致负荷不平衡、电压线和中性线短路、中性线欠损、容量性负荷情况下开闭时的共振等， 将导致电源电压的上升，可能使用表 1 中标有✻的产品型号。

If possible, use a part no. Marked with ✻ in case of voltage temporarily rises load unbalance of separately-wired loads, short between hot and neutral-line, open of neutral line in single-phase-three-wired system, and due to resonance at switching for a capacitive, inductive load.

② 线-地间使用

Used between line to ground

出现故障时，对地电压将上升，因此，请使用附表 1 中推荐的产品型号。

Use a different part no. From “across-the-line use” as table 1, because of raising voltage in case of “line to ground fault”.

进行设备的绝缘电阻试验（DC500V）时，请使用表 1 中推荐的标有✻✻的产品型号。使用不可清除绝缘性能试验的压敏电阻电压时，在一定的电路条件下，试验时可将压敏电阻器从电路上取下。

Use a varistor marked with ✻✻ in table 1, in case of the insulation resistance test (500Vdc) for equipment. When using a part of the varistor voltage that the insulation efficiency examination can not be cleared, there is a case where the varistor can be done by removing it from the circuit depending on the circuit condition.

进行设备的耐电压试验（AC1000V 或 AC1200V）时，请使用表 1 中推荐的标有✻✻✻的产品型号。

Use a varistor marked with ✻✻✻ in table 1, in case of the withstanding voltage test (1000Vac or 1200Vac) for equipment.

d) 关于电流保险丝

Concerning current fuse

① 所用压敏电阻器与电流保险丝的额定电流，一般推荐按下表进行选定。此外，在用户端，当压敏电阻器损坏时，确认其设备是否会发生 2 次伤害。

We recommend selecting a varistor and the rated current of a current fuse as follows. Finally, please be sure that there is no danger if the varistor mounted on the equipment breaks

规格 Specs	05D	07D	10D	14D	20D	25D
保险丝额定电流 Fuse rated current	≤2A	≤5A	≤5A	≤10A	≤10A	≤16A

② 保险丝的插入部位建议按表 1 操作。

The recommended fuse position is shown in table 1.

e) 温度保险丝

Concerning thermal fuse

将压敏电阻器与温度保险丝连接时，用户端请尽量选用热结合较好的保险丝。

Set a thermal fuse to get high thermal conductivity with varistor.

表1 – 压敏电阻器的适用范例

<table>
<tr><th colspan="2">类别
Type</th><th>线间使用
Across-the-line use</th><th>线-地使用
Use between line to ground</th></tr>
<tr><td rowspan="2">连线举例
Connections example</td><td>DC/AC 单相
DC/AC 3-phase</td><td> 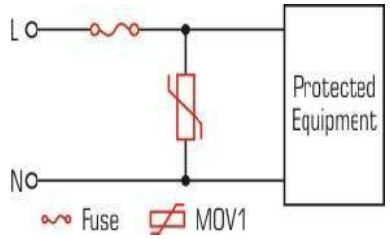
</td><td> 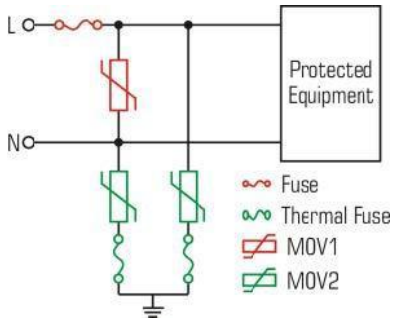
</td></tr>
<tr><td>三相
AC 3-phase</td><td> 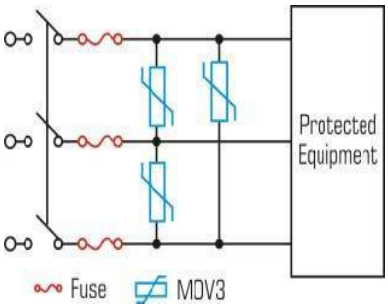
</td><td> 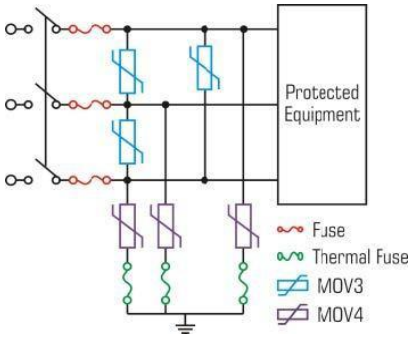
</td></tr>
<tr><td colspan="2">压敏电阻
选型举例
Example of varistor</td><td>
<table>
<tr><th>MOV</th><th>电源电压
Source voltage</th><th>压敏电压
Varistor</th></tr>
<tr><td rowspan="6">MOV1
MOV3</td><td>AC100V</td><td>201～361❇</td></tr>
<tr><td>AC120V</td><td>241～431❇</td></tr>
<tr><td>AC200V</td><td>431-561❇</td></tr>
<tr><td>AC220V</td><td>471-621❇</td></tr>
<tr><td>AC240V</td><td>511-621❇</td></tr>
<tr><td>AC380V</td><td>821</td></tr>
</table>
</td><td>
<table>
<tr><th>MOV</th><th>电源电压
Source voltage</th><th>压敏电阻
Varistor</th></tr>
<tr><td rowspan="3">MOV2
MOV4</td><td>AC100V
AC220V</td><td>471,511,621❇
821❇❇, 182❇❇❇</td></tr>
<tr><td>AC230V
AC240V</td><td>511,621❇
821❇❇, 182❇❇❇</td></tr>
<tr><td>AC380V</td><td>112❇❇,
182❇❇❇</td></tr>
</table>
</td></tr>
</table>

2.2 使用环境

Operating environments

1）压敏电阻器不可在室外使用。

The varistor is designed to be used indoors. Do not use it exposed outdoors.

2）不可在阳光直射场所、发热源附近或温度超过使用温度范围的场所使用。

Do not use the varistor in places exposed to temperatures beyond the operating temperature range, such as places exposed to sunlight and vicinities of heating equipment.

3）不可在淋雨、蒸汽、高湿度的场所使用。

Do not use the varistor in places exposed to high temperatures and high humidity, such as places exposed directly to rain, wind, dew condensation, and vapor.

4）不可在粉尘或盐分较多的场所以及被腐蚀性气体污染的环境中使用。

Do not use the varistor in dusty and salty places and atmospheres polluted by corrosive gases.

2.3 加工条件

Processing conditions

1）不可采用可能导致外涂层树脂劣化的溶剂（稀释剂、丙酮等）进行清洗。

Do not wash the varistor by such solvents (thinner, acetone, etc) as its exterior resin deteriorates.

2）不可施加可能导致外涂层树脂或元件出现破损的冲击或撞击、压力。

Do not apply a strong vibration or shock (by falling, etc) to the varistor, cracking to its exterior resin and element may occur.

3）将压敏电阻器进行树脂镀膜（含护膜塑模）时，不可使用可能导致压敏电阻器劣化的树脂。

When coating the varistor with resin (including molding), do not use such resin.

4）压敏电阻器外涂层树脂附近的引线部位不可进行强烈折弯或施加外力。

Do not bend the varistor lead wires at the position close to its varistor exterior resin, or apply external force to the position.

5）焊接时，请在如下条件下进行。且不可将构成压敏电阻器的焊接部位或绝缘材料熔化。

When soldering the varistor lead wires, follow the recommended conditions and do not melt the solder and insulating materials constituting the varistor.

焊接方式 Soldering method	推荐条件 Recommended condition	注意事项 Attention item
波峰焊 Flow soldering	260℃, 10 秒以内 260°C, within 10 sec	引线型不是回流焊对象产品 Lead wires type is not reflow soldering object part.
上述以外的条件下使用时，请用户端自行确认。 For use other than the above conditions, please the client to confirm. 仅限进行 1 次返工，烙铁温度 350℃ 以下，时间控制在 5 秒以内。 Only 1 times rework, soldering iron temperature should not exceed 350°c and should not be applied for more than 5 seconds.		

■ 推荐焊接条件

Soldering temperature-time profile to recommend

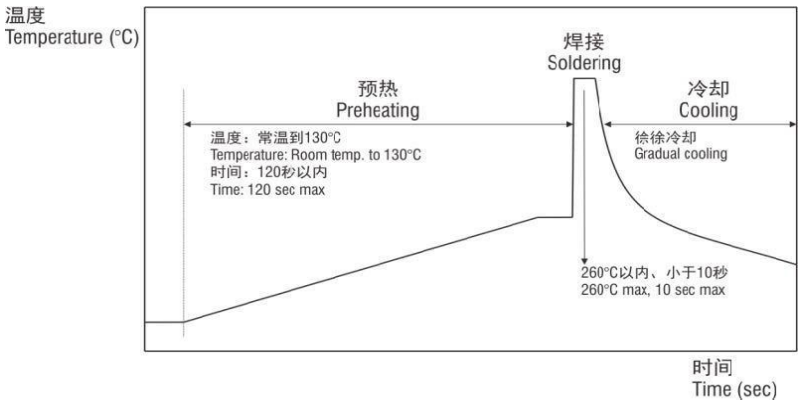

2.4.长期保管

Long-term storage

1）压敏电阻器不可保存在高温、高湿场所。保存场所室温 40°C 以下，湿度 75%RH 以下，保存期限为 1 年。

Do not store the varistor under high temperature and high humidity. Store it at a temperature up to 40 °C and at humidity below 75% RH, and use it within 1 year.

长期间保管（1 年以上）时，使用时请确认产品的可焊性。

Before using the varistor that has been stored for a long period (1 years or longer), confirm the solderability.

2）不可保存在腐蚀性气体（硫化氢、亚硫酸、氯气、氨气等）环境中。

Avoid atmospheres full of corrosive gases (hydrogen sulfide, sulfurous acid, chlorine, ammonia, etc).

3）保存场所避免阳光直射、结露等。

Avoid direct sunlight and dew condensation.

3 说明

Notices

用于可靠性要求极高的设备（航空航天设备、医疗设备等）时，请事先至本公司咨询使用型号和保护措施等相关事宜。

In cases that the varistor is used in equipment (aerospace equipment, medical equipment, etc) requiring extremely high reliability, ask us for a selection of part no., and protection coordination, etc in advance.

若未按照产品规格书记载事项进行操作，并由此导致出现异常时，本公司不负任何责任。

Note that we do not take any responsibility for faults and abnormalities resulting from the use not in conformity with the contents of entries in the delivery specification.

出现使用电路电压的异常上升、超高浪涌的侵入等不可预期因素时，可能导致压敏电阻器起火。为防止延烧到使用设备上，外部结构材料需使用阻燃材料进行多重保护。

There is a possibility that the varistor will unexpectedly cause smoke or ignite because of an abnormal rise of the circuit voltage and invasion of excessive surge. To prevent that accident from spreading over the equipment and not to expand the damage, use multiplex protection such as the adoption of frame- retardant materials for housing parts and structural parts.