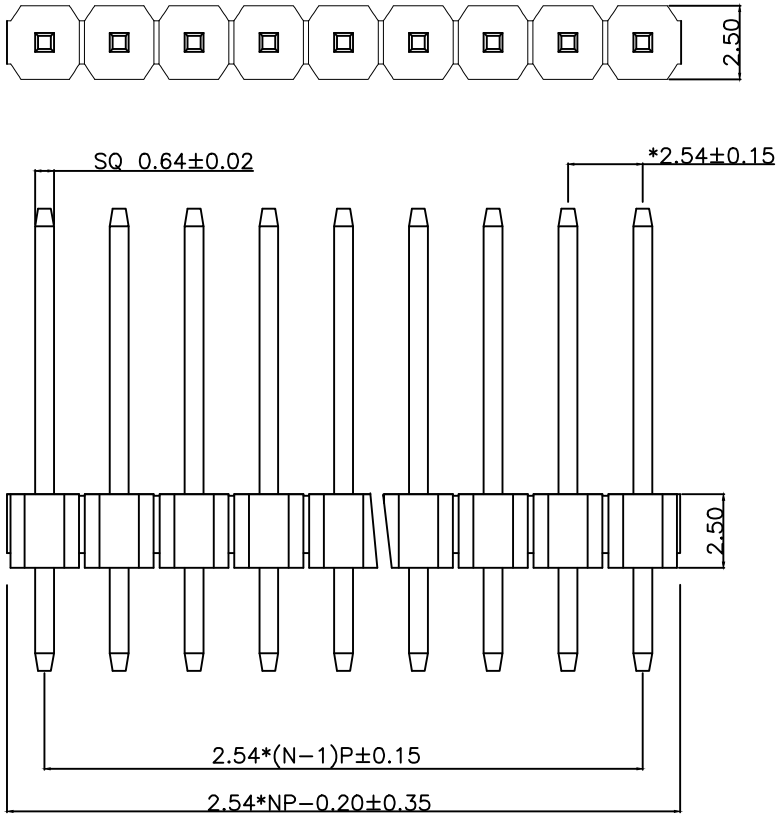

RECOMMENDED PCB LAYOUT (TOP VIEW)

TOLERANCES:±0.05

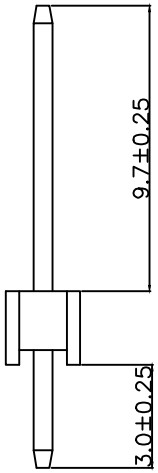

Notes:
Rated current:3.0A
Withstand Voltage:500V AC/DC
Contact Resistance:20mΩ Max
Insulation Resistance:1000MΩ Min
Operating Temperature:-40℃ TO +105℃
Contact Material:Brass
Plating:Gold Flash
Insulator Material: PA6T UL94V-0 BK

NO.	DATE	DESCRIPTION	APPROVAL
1	2024-05-28	初次发行	Jack
2			
3			
4			
5			

DRAWING: MAO ZI HAO

CHECKED: YAO HUI SONG

APPROVAL: HAN XIAO QIU

GENERAL TOLERANCE
.X: ±0.30 .X°: ±2°
.XX: ±0.20 .XX°: ±1°
.XXX: ±0.10 .XXX°: ±0.5°

UNIT: MM

PROJECTION

SCALE: N/A

SHEET: 1/1

东莞市文章济美电子有限公司

DESCRIPTION: PH2.54*2.5 1*NP PA9.7 PC3.0 180°

PART NO: 5001-040882-B

REC:1.0

SERIES :

ROHS