1. DESCRIPTION

The XL7660AI Super Voltage Converters are monolithic CMOS voltage conversion ICs that guarantee significant performance advantages over other similar devices. They are direct replacements for the industry standard XL7660AI offering an extended operating supply voltage range up to 11.5V, with lower supply current.
A Frequency Boost pin has been incorporated to
enable the user to achieve lower output impedance despite using smaller capacitors. All improvements are highlighted in the "Electrical Specifications" section.

The XL7660AI perform supply voltage conversions from positive to negative for an input range of 1.5V to 11.5V, resulting in complementary output voltages of -1.5V to -11.5V. Only two non-critical external capacitors are needed,
for the charge pump and charge reservoir functions. The
XL7660AI can be connected to function as a voltage doubler and will generate up to 22.8V with a 11.5V input. They can also be used as a voltage multipliers or voltage dividers.

Each chip contains a series DC power supply regulator, RC oscillator, voltage level translator, and four output power MOS switches. The oscillator, when unloaded, oscillates at a nominal frequency of 10kHz for an input supply voltage of 5.0V. This frequency can be lowered by the addition of an external capacitor to the "OSC" terminal, or the oscillator may be over-driven by an external clock.

The "LV" terminal may be tied to GND to bypass the internal series regulator and improve low voltage (LV) operation. At medium to high voltages (3.5V to 11.5V),
the LV pin is left floating to prevent device latchup.

In some applications, an external Schottky diode from VOUT to CAP- is needed to guarantee latchup free operation (see Do's and Dont's section on page 8).

2. FEATURES

- Guaranteed Lower Max Supply Current for All Temperature Ranges
- Wide Operating Voltage Range: 1.5V to 11.5V
- 100% Tested at 3V
- Guaranteed Minimum Power Efficiency of 91%
- Improved Minimum Open Circuit Voltage Conversion Efficiency of 99%
- Improved SCR Latchup Protection
- Simple Conversion of +5V Logic Supply to ±5V Supplies
- Simple Voltage Multiplication VOUT = (-)nVIN
- Easy to Use; Requires Only Two External Non-Critical Passive Components
- Pb-Free Available (RoHS Compliant)

3. APPLICATIONS

- Simple Conversion of +5V to ±5V Supplies
- Voltage Multiplication VouT = $\pm nV_{IN}$
- Negative Supplies for Data Acquisition Systems andInstrumentation
- RS232 Power Supplies
- Supply Splitter,$V_{OUT} = \pm V_S$

4. PIN CONFIGURATIONS

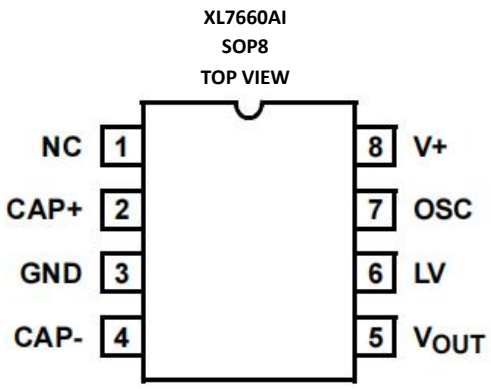

5. ABSOLUTE MAXIMUM RATINGS

Supply Voltage. . . . . +13.0V

LV and OSC Input Voltage (Note 1)
V+ < 5.5V . . . . . -0.3V to V+ + 0.3V
V+ > 5.5V . . . . . V+ -5.5V to V+ +0.3V

Current into LV (Note 1)
V+ > 3.5V 20µA

Output Short Duration
$V_{SUPPLY} \leq 5.5V$ . . . . . .Continuous

Temperature Range
XL7660AI . . . . . -40°C to +85°C

6. THERMAL INFORMATION

Thermal Resistance (Typical, Notes 2, 3) θ_{JA} (°C/W) θ_{JC} (°C/W)

8 Ld PDIP*	110	59
8 Ld Plastic SOIC	160	48

Storage Temperature Range . . . . . -65°C to +150°C

CAUTION: Do not operate at or near the maximum ratings listed for extended periods of time. Exposure to such conditions may adversely impact product reliability and result in failures not covered by warranty.

NOTES:

1. Connecting any terminal to voltages greater than V+ or less than GND may cause destructive latchup. It is recommended that no inputs from sources operating from external supplies be applied prior to "power up" of XL7660AI.
2. θ_{JA} is measured with the component mounted on a low effective thermal conductivity test board in free air.
3. For θ_{JC}, the "case temp" location is taken at the package top center.
4. Pb-free PDIPs can be used for through-hole wave solder processing only. They are not intended for use in reflow solder processing applications.

7. ELECTRICACL SPECIFICTIONS

XL7660AI, V+ = 5V, TA = +25°C, OSC = Free running, XL7660AI Test Circuit" on Figure 12, unless otherwise specified.

PARAMETER	SYMBOL	TEST CONDITIONS	MIN (Note5)	TYP	MAX (Note5)	UNITS
Supply Current (Note 7)	I+	R_L = ∞, +25°C	—	80	160	µA
		0°C < T_A < +70°C	—	—	180	µA
		-40°C < T_A < +85°C	—	—	180	µA
		-55°C < T_A < +125°C	—	—	200	µA
Supply Voltage Range - High (Note 8)	$V+_H$	RL = 10k, LV Open, TMIN < TA < TMAX	3.0	—	11.5	V
Supply Voltage Range - Low	$V+_L$	RL = 10k, LV to GND, TMIN < TA < TMAX	1.5	—	3.5	V
Output Source Resistance	R_{OUT}	I_{OUT} = 20mA	—	60	100	Ω
		I_{OUT} = 20mA, 0°C < TA < +70°C	—	—	120	Ω
		I_{OUT} = 20mA, -25°C < TA < +85°C	—	—	120	Ω
		I_{OUT} = 20mA, -55°C < TA < +125°C	—	—	150	Ω
		I_{OUT} = 3mA, V+ = 2V, LV = GND, 0°C < TA < +70°C	—	—	250	Ω
		I_{OUT} = 3mA, V+ = 2V, LV = GND, -40°C < TA < +85°C	—	—	300	Ω
		I_{OUT} = 3mA, V+ = 2V, LV = GND, -55°C < TA < +125°C	—	—	400	Ω
Oscillator Frequency (Note 6)	f_{OSC}	C_{OSC} = 0, Pin 1 Open or GND	5	10	—	kHz
		C_{OSC} = 0, Pin 1 = V+	—	35	—	kHz
Power Efficiency	PEFF	R_L = 5kΩ	91	95	—	%
		T_{MIN} < TA < T_{MAX} R_L = 5kΩ	95	97	—	—
Voltage Conversion Efficiency	V_{OUT}EFF	R_L = ∞	99	99.9	—	%
Oscillator Impedance	Z_{OSC}	V+ = 2V	—	1	—	MΩ
		V+ = 5V	—	100	—	kΩ
XL7660AI, V+ = 3V, TA = 25°C, OSC = Free running, Test Circuit Figure 12, unless otherwise specified						
Supply Current (Note 9)	I+	V+ = 3V, R_L = ∞, +25°C	—	26	100	µA
		0°C < T_A < +70°C	—	—	125	µA
		-40°C < T_A < +85°C	—	—	125	µA
Output Source Resistance	R_{OUT}	V+ = 3V, I_{OUT} = 10mA	—	97	150	Ω
		0°C < T_A < +70°C	—	—	200	Ω
		-40°C < T_A < +85°C	—	—	200	Ω
Oscillator Frequency (Note 9)	f_{OSC}	V+ = 3V (same as 5V conditions)	5.0	8	—	kHz
		0°C < T_A < +70°C	3.0	—	—	kHz
		-40°C < T_A < +85°C	3.0	—	—	kHz

NOTES:

5. Parameters with MIN and/or MAX limits are 100% tested at +25°C, unless otherwise specified. Temperature limits established by characterization and are not production tested.
6. In the test circuit, there is no external capacitor applied to pin 7. However, when the device is plugged into a test socket, there is usually a very small but finite stray capacitance present, on the order of 5pF.
7. The Intersil XL7660AI can operate without an external diode over the full temperature and voltage range. This device will function in existing designs that incorporate an external diode with no degradation in overall circuit performance.
8. All significant improvements over the industry standard 7660 are highlighted.
9. Derate linearly above 50°C by 5.5mW/°C.

8. FUNCTIONAL BLOCK DIAGRAM

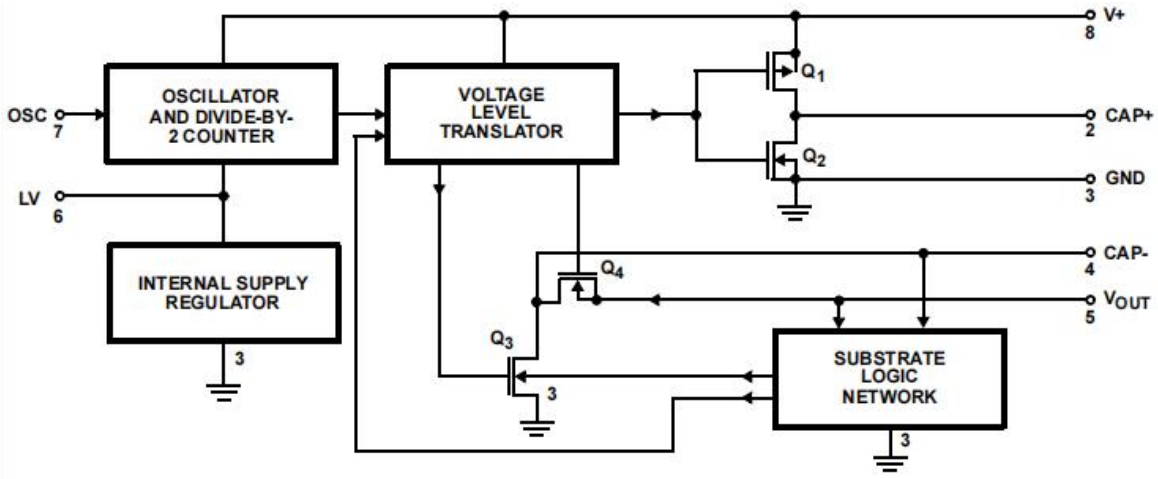

9. TYPICAL PERFORMANCE CURVES

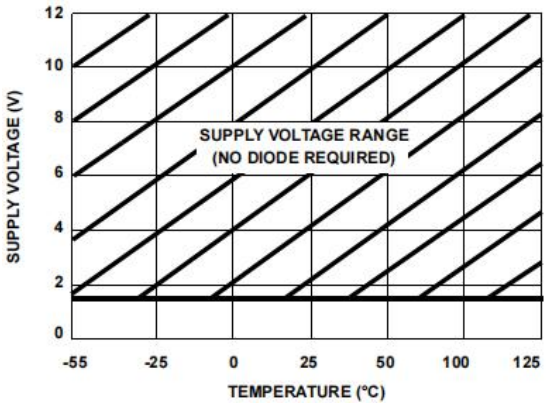

FIGURE 1. OPERATING VOLTAGE AS A FUNCTION OF TEMPERATURE

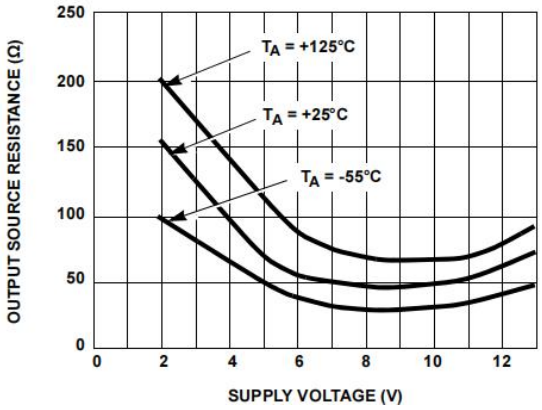

FIGURE 2. OUTPUT SOURCE RESISTANCE AS A FUNCTION OF SUPPLY VOLTAGE

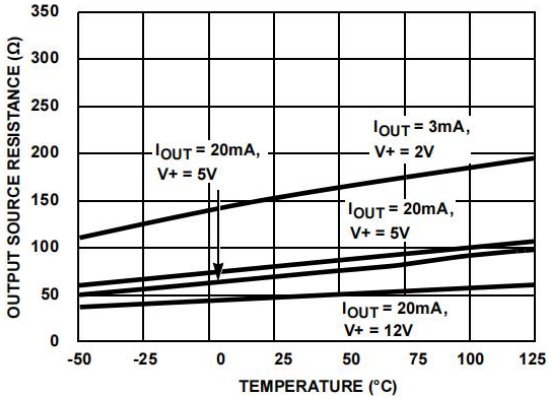

FIGURE 3. OUTPUT SOURCE RESISTANCE AS A FUNCTION OF TEMPERATURE

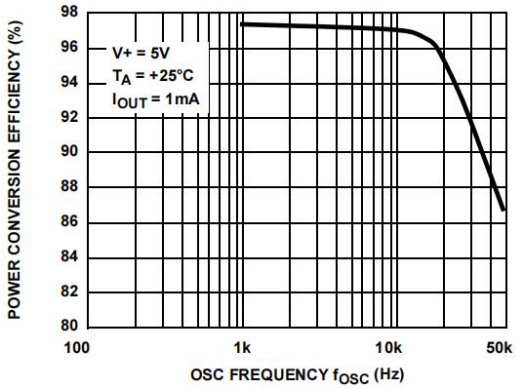

FIGURE 4. POWER CONVERSION EFFICIENCY AS A FUNCTION OF OSCILLATOR FREQUENCY

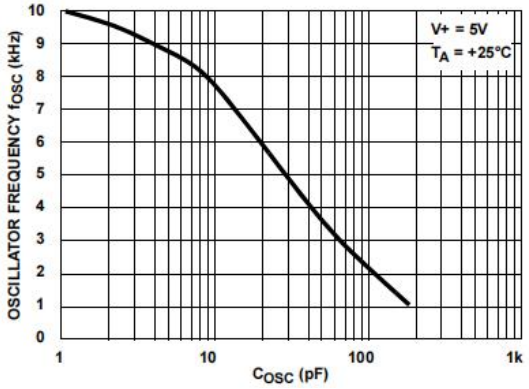

FIGURE 5. FREQUENCY OF OSCILLATION AS A FUNCTION OF EXTERNAL OSCILLATOR CAPACITANCE

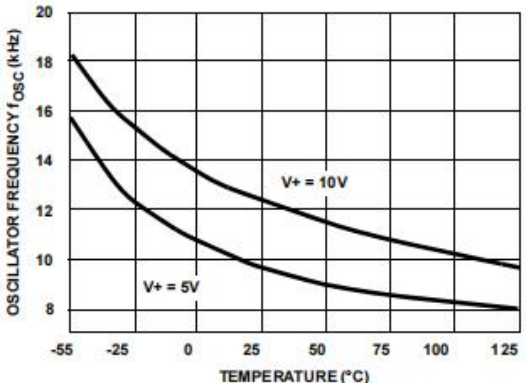

FIGURE 6. UNLOADED OSCILLATOR FREQUENCY AS A FUNCTION OF TEMPERATURE

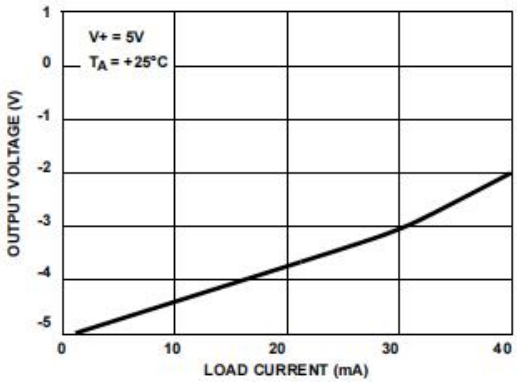

FIGURE 7. OUTPUT VOLTAGE AS A FUNCTION OF OUTPUT CURRENT

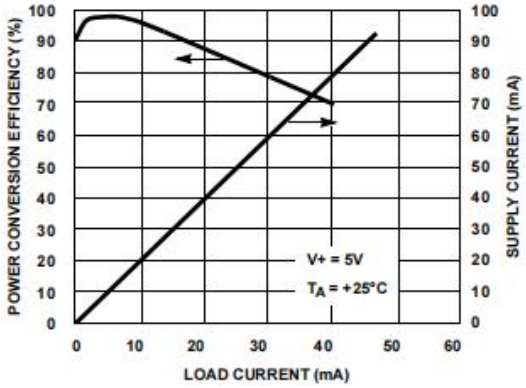

FIGURE 8. SUPPLY CURRENT AND POWER CONVERSION EFFICIENCY AS A FUNCTION OF LOADCURRENT

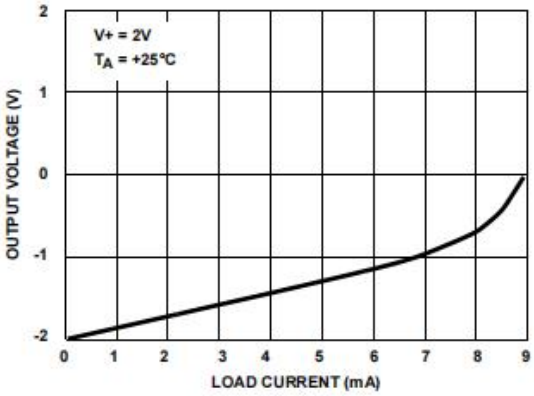

FIGURE 9. OUTPUT VOLTAGE AS A FUNCTION OF OUTPU TCURRENT

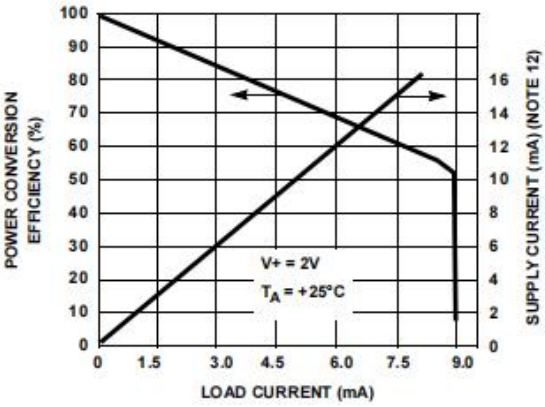

FIGURE 10. SUPPLY CURRENT AND POWER CONVERSION EFFICIENCY AS A FUNCTION OF LOAD CURRENT

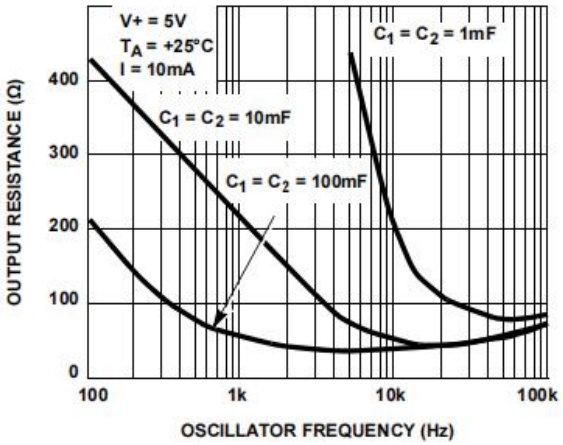

FIGURE 11. OUTPUT SOURCE RESISTANCE AS A FUNCTION OF OSCILLATOR FREQUENCY

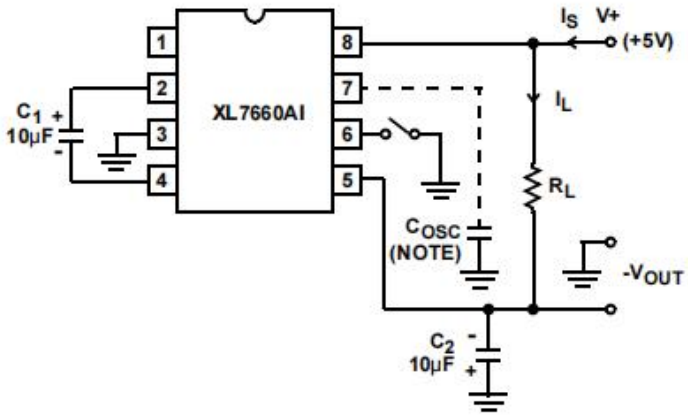

NOTE: For large values of COSC (>1000pF) the values of C_1 and C_2 should be increased to 100µF.

FIGURE 12. XL7660AI TEST CIRCUIT

10. DETAILED DESCRIPTION

The XL7660AI contain all the necessary circuitry to complete a negative voltage converter, with the exception of two external capacitors, which may be inexpensive 10µF polarized electrolytic types. The mode of operation of the device may best be understood by considering Figure 13, which shows an idealized negative voltage converter. Capacitor C1 is charged to a voltage, V+, for the half cycle, when switches S1 and S3 are closed. (Note: Switches S2 and S4 are open during this half cycle). During the second half cycle of operation, switches S2 and S4 are closed, with S1 and S3 open, thereby shifting capacitor C1 to C2 such that the voltage on C2 is exactly V+, assuming ideal switches and no load on C2. The XL7660AI approach this ideal situation more closely than existing non-mechanical circuits.

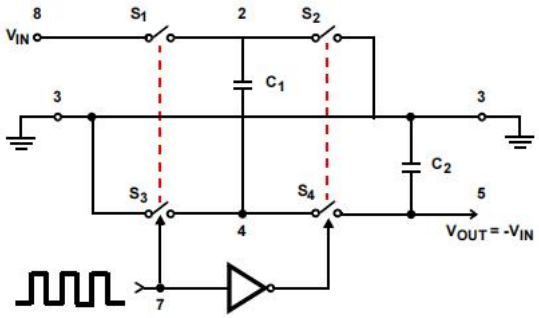

FIGURE 13. IDEALIZED NEGATIVE VOLTAGE CONVERTER

In the XL7660AI, the four switches of Figure 13 are MOS power switches; S1 is a P-Channel device; and S2, S3 and S4 are N-Channel devices. The main difficulty with this approach is that in integrating the switches, the substrates of S3 and S4 must always remain reverse biased with respect to their sources, but not so much as to degrade their "ON" resistances. In addition, at circuit startup, and under output short circuit conditions (V_{OUT} = V+), the output voltage must be sensed and the substrate bias adjusted accordingly. Failure to accomplish this would result in high power losses and probable device latch-up.

This problem is eliminated in the XL7660AI by a logic network that senses the output voltage (V_{OUT}) together with the level translators, and switches the substrates of S3 and S4 to the correct level to maintain necessary reverse bias

The voltage regulator portion of the XL7660AI is an integral part of the anti-latchup circuitry; however, its inherent voltage drop can degrade operation at low voltages. Therefore, to improve low voltage operation, the "LV" pin should be connected to GND, thus disabling the regulator. For supply voltages greater than 3.5V, the LV terminal must be left open to ensure latchup-proof operation and to prevent device damage.

11. THEORETICAL POWER EFFICIENCY CONSIDERATIONS

In theory, a voltage converter can approach 100% efficiency if certain conditions are met:

1. The drive circuitry consumes minimal power.

2. The output switches have extremely low ON resistance and virtually no offset.

3. The impedance of the pump and reservoir capacitors are negligible at the pump frequency.

The XL7660AI approach these conditions for negative voltage conversion if large values of C1 and C2 are used. ENERGY IS LOST ONLY IN THE TRANSFER OF CHARGE BETWEEN CAPACITORS IF A CHANGE IN VOLTAGE OCCURS. The energy lost is defined as shown in Equation 1:

$$E = \frac{1}{2}C_1(V_1^2 - V_2^2) \qquad \text{(EQ. 1)}$$

where V1 and V2 are the voltages on C1 during the pump and transfer cycles. If the impedances of C1 and C2 are relatively high at the pump frequency (see Figure 13) compared to the value of RL, there will be a substantial difference in the voltages, V1 and V2. Therefore it is not only desirable to make C2 as large as possible to eliminate output voltage ripple, but also to employ a correspondingly large value for C1 in order to achieve maximum efficiency of operation.

12. DO'S AND DON'TS

1. Do not exceed maximum supply voltages.
2. Do not connect LV terminal to GND for supply voltage greater than 3.5V.
3. Do not short circuit the output to V+ supply for supply voltages above 5.5V for extended periods; however, transient conditions including start-up are okay.
4. When using polarized capacitors, the + terminal of C1 must be connected to pin 2 of the XL7660AI, and the + terminal of C2 must be connected to GND.
5. 5. If the voltage supply driving the XL7660AI has a large source impedance (25Ω to 30Ω), then a 2.2µF capacitor from pin 8 to ground may be required to limit the rate of rise of input voltage to less than 2V/µs.
6. If the input voltage is higher than 5V and it has a rise rate more than 2V/µs, an external Schottky diode from V_{OUT} to CAP- is needed to prevent latchup (triggered by forward biasing Q4's body diode) by keeping the output (pin 5) from going more positive than CAP- (pin 4).
7. User should ensure that the output (pin 5) does not go more positive than GND (pin 3). Device latch-up will occur under these conditions. To provide additional protection, a 1N914 or similar diode placed in parallel with C2 will prevent the device from latching up under these conditions, when the load on V_{OUT} creates a path to pull up VOUT before the IC is active (anode pin 5, cathode pin 3).

20. TYPOCAL APPLICATIONS

20.1. Simple Negatibe Voltage Converter

The majority of applications will undoubtedly utilize the XL7660AI for generation of negative supply voltages. Figure 14 shows typical connections to provide a negative supply where a positive supply of +1.5V to +11.5V is available. Keep in mind that pin 6 (LV) is tied to the supply negative (GND) for supplyvoltage below 3.5V.

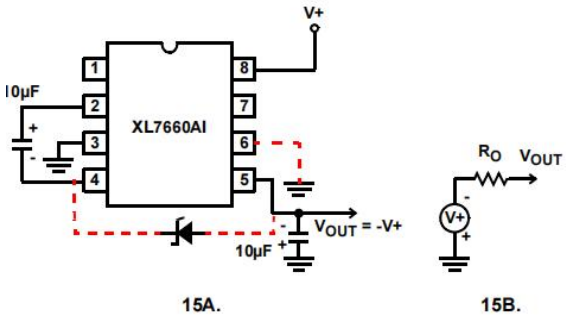

FIGURE 14. SIMPLE NEGATIVE CONVERTER AND ITS OUTPUT EQUIVALENT

The output characteristics of the circuit in Figure 15 can be approximated by an ideal voltage source in series with a resistance as shown in Figure 15B. The voltage source has a value of -(V+). The output impedance (RO) is a function of the ON resistance of the internal MOS switches (shown in Figure 14), the switching frequency, the value of C1 and C2, and the ESR (equivalent series resistance) of C1 and C2. A good first order approximation for RO is shown in Equation 2:

$$R_0 \cong 2((R_{SW1} + R_{SW3} + ESR_{C1}) + 2(R_{SW2} + R_{SW4} + ESR_{C1}))$$

$$\frac{1}{f_{PUMP} \times C_1} + ESR_{C2} \qquad \text{(EQ. 2)}$$

$$f_{PUMP} = \frac{f_{OSC}}{2} \qquad (R_{SWX} = \text{MOSFET Switch Resistance})$$

Combining the four R_{SWX} terms as R_{SW}, we see in Equation 3 that:

$$R_0 \cong 2xR_{SW} + \frac{1}{f_{PUMP} \times C_1} + 4xESR_{C1} + ESR_{C2} \qquad \text{(EQ. 3)}$$

RSW, the total switch resistance, is a function of supply voltage and temperature (see the output source resistance graphs, Figures 2, 3, and 11), typically 23Ω at +25°C and 5V. Careful selection of C1 and C2 will reduce the remaining terms, minimizing the output impedance. High value capacitors will reduce the 1/(fPUMP x C1) component, and low ESR capacitors will lower the ESR term. Increasing the oscillator frequency will reduce the 1/(fPUMP x C1) term, but may have the side effect of a net increase in output impedance when C1 > 10µF and is not long enough to fullycharge the capacitors every cycle. Equation 4 shows a typical application where fOSC = 10kHz and C = C1 = C2 = 10µF:

$$R_0 \cong 2x23 + \frac{1}{5 \times 10^3 \times 10 \times 10^{-6}} + 4xESR_{C1} + ESR_{C2} \qquad \text{(EQ. 4)}$$

$$R_0 \cong 46 + 20 + 5 \times ESR_C$$

Since the ESRs of the capacitors are reflected in the output impedance multiplied by a factor of 5, a high value could potentially swamp out a low $1/f_{PUMP} \times C_1$ term, rendering an increase in switching frequency or filter capacitance ineffective. Typical electrolytic capacitors may have ESRs as high as 10Ω.

20.2. Output Ripple

ESR also affects the ripple voltage seen at the output. The peak-t-peak output ripple voltage is given by Equation 5:

$$V_{RIPPLE} \cong \left(\frac{1}{2 \times f_{PUMP} \times C_2} + 2ESR_{C2} \times I_{OUT}\right) \qquad \text{(EQ. 5)}$$

A low ESR capacitor will result in a higher performance output.

20.3. Paralleling Devices

Any number of XL7660AI voltage converters may be paralleled to reduce output resistance. The reservoir capacitor, C2, serves all devices, while each device requires its own pump capacitor, C1. The resultant output resistance is approximated in Equation 6:

$$R_{OUT} = \frac{R_{OUT(of\ ICL7660S)}}{n(number\ of\ devices)} \qquad \text{(EQ. 6)}$$

20.4. Cascading Devices

The XL7660AI may be cascaded as shown to produce larger negative multiplication of the initial supply voltage. However, due to the finite efficiency of each device, the practical limit is 10 devices for light loads. The output voltage is defined as shown in Equation 7:

$$V_{OUT} = -n(V_{IN}) \qquad \text{(EQ. 7)}$$

where n is an integer representing the number of devices cascaded. The resulting output resistance would be approximately the weighted sum of the individual XL7660AI R_{OUT} values.

20.5. Changing the XL7660AI Oscillator Frequency

It may be desirable in some applications, due to noise or other considerations, to alter the oscillator frequency. This can be achieved simply by one of several methods.

By connecting the Boost Pin (Pin 1) to V+, the oscillator charge and discharge current is increased and, hence, the oscillator frequency is increased by approximately 3.5 times. The result is a decrease in the output impedance and ripple.

This is of major importance for surface mount applications where capacitor size and cost are critical. Smaller capacitors, such as 0.1µF, can be used in conjunction with the Boost Pin to achieve similar output currents compared to the device free running with C1 = C2 = 10µF or 100µF. (see Figure 11).

ncreasing the oscillator frequency can also be achieved by overdriving the oscillator from an external clock, as shown in Figure 15. In order to prevent device latchup, a 1kΩ resistor must be used in series with the clock output. In a situation where the designer has generated the external clock frequency using TTL logic, the addition of a 10kΩ pull-up resistor to V+ supply is required. Note that the pump frequency with external clocking, as with internal clocking, will be one-half of the clock frequency. Output transitions occur on the positive going edge of the clock.

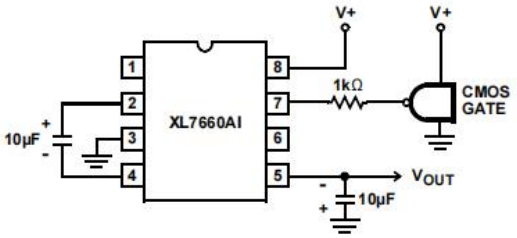

FIGURE 15. EXTERNAL CLOCKING

It is also possible to increase the conversion efficiency of the XL7660AI at low load levels by lowering the oscillator frequency. This reduces the switching losses, and is shown in Figure 16. However, lowering the oscillator frequency will cause an undesirable increase in the impedance of the pump (C1) and reservoir (C2) capacitors; this is overcome by increasing the values of C1 and C2 by the same factor by which the frequency has been reduced. For example, the addition of a 100pF capacitor between pin 7 (OSC and V+) will lower the oscillator frequency to 1kHz from its nominal frequency of 10kHz (a multiple of 10), and thereby necessitate a corresponding increase in the value of C1 and C2 (from 10µF to 100µF).

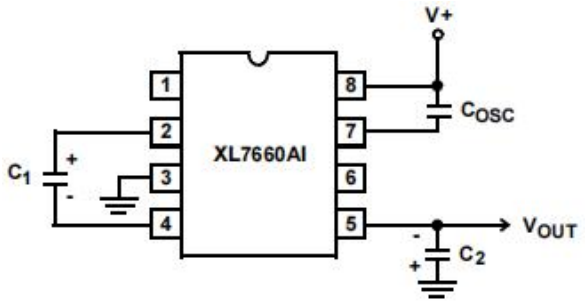

FIGURE 16. LOWERING OSCILLATOR FREQUENCY

20.6. Positive Voltage Doubling

The XL7660AI may be employed to achieve positive voltage doubling using the circuit shown in Figure 17. In this application, the pump inverter switches of the XL7660AI are used to charge C1 to a voltage level of V+ -VF, where V+ is the supply voltage and VF is the forward voltage on C1, plus the supply voltage (V+) is applied through diode D2 to capacitor C2. The voltage thus created on C2 becomes(2V+) - (2VF) or twice the supply voltage minus the combined forward voltage drops of diodes D1 and D2.

The source impedance of the output (V_{OUT}) will depend on the output current, but for V+ = 5V and an output current of 10mA, it will be approximately 60Ω.

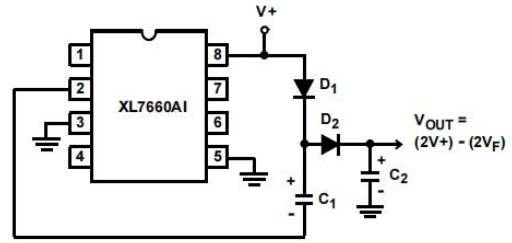

NOTE: D_1 AND D_2 CAN BE ANY SUITABLE DIODE.

FIGURE 17. POSITIVE VOLTAGE DOUBLER

20.7. Combined Negative Voltage Conversion and Positive Supply Doubling

Figure 18 combines the functions shown in Figure 14 and Figure 17 to provide negative voltage conversion and positive voltage doubling simultaneously. This approach would be suitable, for example, for generating +9V and -5V from an existing +5V supply. In this instance, capacitors C1 and C3 perform the pump and reservoir functions, respectively, for negative voltage generation, while capacitors C2 and C4 are pump and reservoir, respectively, for the doubled positive voltage. There is a penalty in this configuration which combines both functions, however, in that the source impedances of the generated supplies will be somewhat higher, due to the finite impedance of the common charge pump driver at pin 2 of the device.

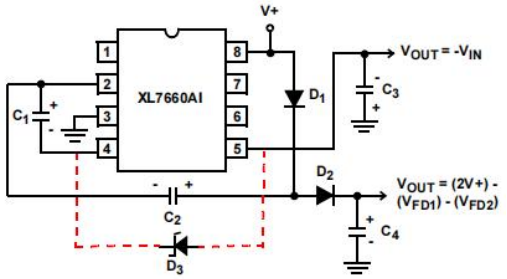

FIGURE 18. COMBINED NEGATIVE VOLTAGE CONVERTER AND POSITIVE DOUBLER

20.8. Voltage Splitting

The bidirectional characteristics can also be used to split a high supply in half, as shown in Figure 19. The combined load will be evenly shared between the two sides, and a high value resistor to the LV pin ensures start-up. Because the switches share the load in parallel, the output impedance is much lower than in the standard circuits, and higher currents can be drawn from the device. By using this circuit, and then the circuit of Figure 15, +15V can be converted, via +7.5 and -7.5, to a nominal -15V, although with rather high series output resistance (~250Ω).

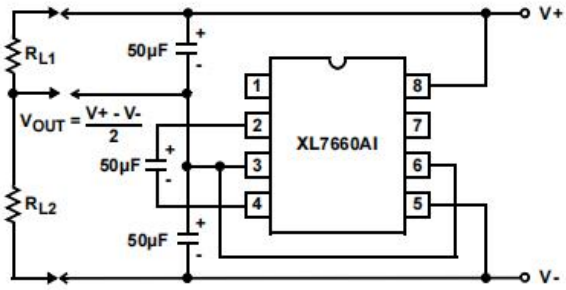

FIGURE 19. SPLITTING A SUPPLY IN HALF

20.9. Regulated Negative Voltage Supply

In some cases, the output impedance of the XL7660AI can be a problem, particularly if the load current varies substantially. Direct feedback is inadvisable, since the XL7660AI output does not respond instantaneously to change in input, but only after the switching delay. The circuit shown supplies enough delay to accommodate the XL7660AI, while maintaining adequate feedback. An increase in pump and storage capacitors is desirable, and the values shown provide an output impedance of less than 5Ω to a load of 10mA.

21. ORDERING INFORMATION

Ordering Information

Part Number	Device Making	Package type	Body size (mm)	Temperate (°C)	MSL	Transpo Rt	Package Quantit
XL7660AI	XL7660AI	SOP-8	4.90*3.90	-40 to +85	MSL3	T&R	2500

22. DIMENSIONAL DRAWINGS

SOP8

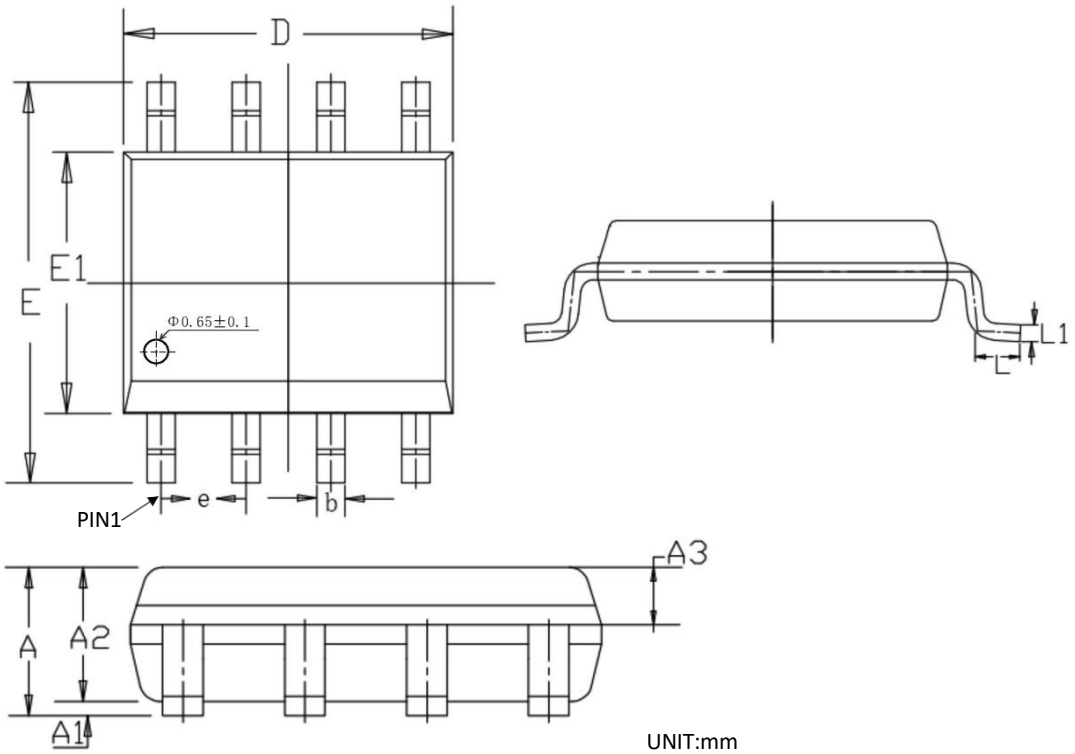

UNIT:mm

	MIN	NOM	MAX
A	1.450	1.550	1.650
A1	0.100	0.150	0.200
A2	1.300	1.400	1.500
A3	0.600	0.650	0.700
b	0.380	–	0.510
e	1.240	1.270	1.300
D	4.800	4.900	5.000
E	5.800	6.000	6.200
E1	3.800	3.900	4.000
L	0.450	0.600	0.750
L1	—	0.25BSC	—