# DC-to- DC Converter Control Circuits

## FEATURES

- Operation from 3.0V to 40V input
- Low standby current
- Current limiting
- Output switch current up to 1.5A
- Adjustable output voltage
- Operation at frequencies up to 100kHz
- Precision reference (2%)

DIP-8

SOP-8

MSOP-8

## ORDERING INFORMATION

| DEVICE | Package Type | MARKING | Packing | Packing Qty |
|---|---|---|---|---|
| MC33063N | DIP-8 | MC33063 | TUBE | 2000pcs/box |
| MC33063M/TR | SOP-8 | MC33063 | REEL | 2500pcs/reel |
| MC33063MM/TR | MSOP-8 | 33063 | REEL | 3000pcs/reel |

## DESCRIPTION

The MC33063 series is a monolithic control circuit containing primary functions required for DC-to-DC converters.

These devices consist of an internal temperature-compensated reference, comparator, controlled duty cycle oscillator withan active current limit circuit, driver and high current output switch. This series was specifically designed to be incorporated in step-down and step-up and voltage-inverting applications with a minimum number of external components.

## PIN CONNECTIONS

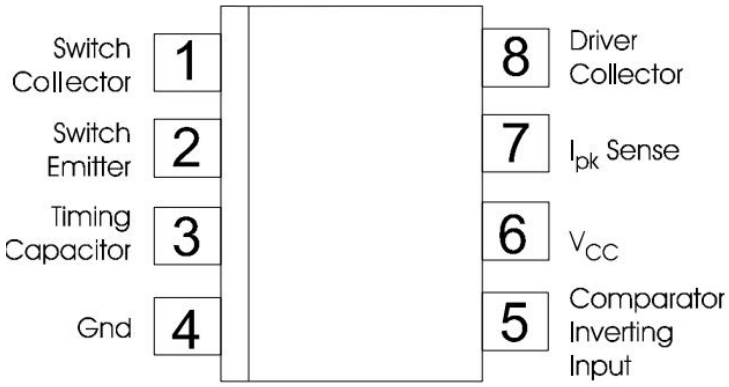


DIP-8/SOP-8/MSOP-8

(Top view)

## SCHEMATIC DIAGRAM

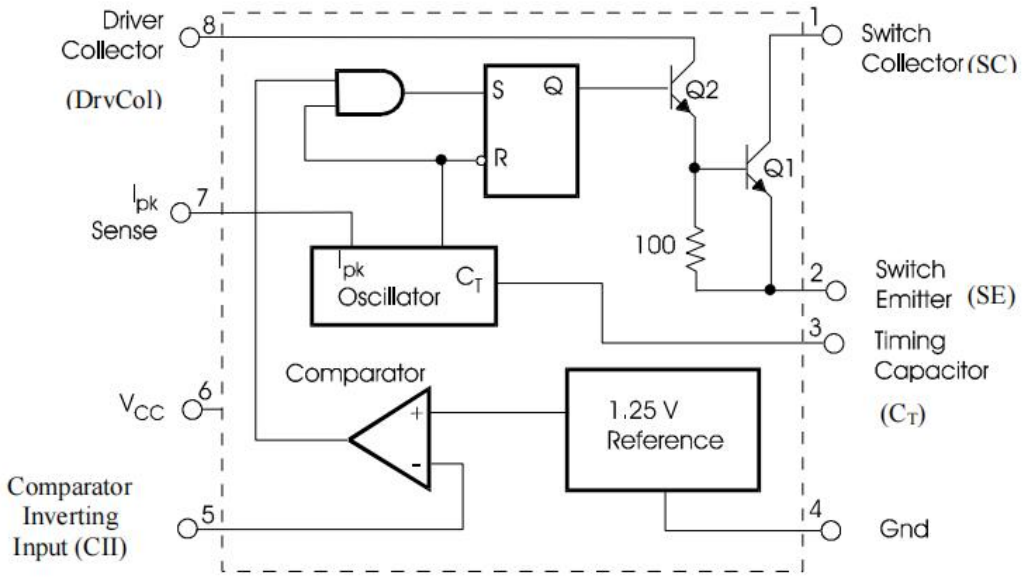


(Bottom view)

## ABSOLUTE MAXIMUM RATINGS

| Rating | Symbol | Value | Unit |
|---|---|---|---|
| Power supply voltage | $V_{CC}$ | 40 | V |
| Comparator input voltage range | $V_{IR}$ | -0.3 to +40 | V |
| Switch collector voltage | $V_{C(Switch)}$ | 40 | V |
| Switch emitter voltage (VPin1=40V) | $V_{E(Switch)}$ | 40 | V |
| Switch collector-to-emitter voltage | $V_{CE(Switch)}$ | 40 | V |
| Driver collector voltage | $V_{C(Driver)}$ | 40 | V |
| Driver collector current (Note 1) | $I_{C(Driver)}$ | 100 | mA |
| Switch current | $I_{Sw}$ | 1.5 | A |
| Operating junction temperature | $T_J$ | +150 | °C |
| Operating ambient temperature range | $T_A$ | -40 to +85 | °C |
| Storage temperature range | $T_{STG}$ | -65 to + 150 | °C |
| ESD (HBM) | | 2500 | V |
| Lead Temperature (Soldering, 10 seconds) | $T_L$ | 260 | °C |

**Note**:Absolute Maximum Ratings indicate limits beyond which damage to the device may occur. Operating Ratings indicate conditions for which the device is intended to be functional, but specific performance is not ensured.

## ELECTRICAL CHARACTERISTICS ($V_{CC}$=5.0V, $T_A$=$T_{Low}$ to $T_{High}$, unless otherwise specified.)

| Characteristics | Symbol | Min | Typ | Max | Unit |
|---|---|---|---|---|---|
| **OSCILLATOR** | | | | | |
| Frequency (VPin5=0V, $C_T$=1.0nF, $T_A$=25°C) | fosc | 24 | 33 | 42 | kHz |
| Charge current ($V_{CC}$=5.0V to 40V, $T_A$=25°C) | Ichg | 24 | 35 | 42 | μA |
| Discharge current ($V_{CC}$=5.0V to 40V, $T_A$=25°C) | Idischg | 140 | 220 | 260 | μA |
| Discharge-to-charge current ratio (Pin7 to $V_{CC}$, $T_A$=25°C) | Idischg/Ichg | 5.2 | 6.5 | 7.5 | - |
| Current limit sense voltage (Ichg=Idischg, $T_A$=25°C) | VIpk(sense) | 250 | 300 | 350 | mV |
| **OUTPUT SWITCH** (Note 2) | | | | | |
| Saturation voltage, Darlington connection ISw=1.0A, Pins1, 8 connected | $V_{CE(sat)}$ | - | 1.0 | 1.3 | V |
| Saturation voltage, Darlington connection (ISw=1.0A, $R_{Pin8}$=82Ω to $V_{CC}$, forced β=20) | $V_{CE(sat)}$ | - | 0.45 | 0.7 | V |
| DC current gain (ISw=1.0A, $V_{CE}$=5.0, $T_A$=25°C) | $h_{FE}$ | 50 | 75 | - | - |
| Collector off-state current ($V_{CE}$=40V) | $I_{C(off)}$ | - | 1.0 | 100 | μA |
| **COMPARATOR** | | | | | |
| Threshold voltage | $V_{th}$ | 1.225<br>1.21 | 1.25<br>- | 1.275<br>1.29 | V |
| Threshold voltage line regulation($V_{CC}$=3.0V to 40V) | $Reg_{line}$ | - | 1.4 | 5.0 | mV |
| Input bias current(Vin=0V) | $I_{IB}$ | - | -20 | -400 | nA |
| **TOTAL DEVICE** | | | | | |
| Supply current ($V_{CC}$=5.0V to 40V, $C_T$=1.0nF, Pin7=$V_{CC}$, VPin5>Vth, Pin2 =Gnd, remaining pins - open | $I_{CC}$ | - | - | 4.0 | mA |

Notes: 1. Maximum package power dissipation limits must be observed.
2. Low duty cycle pulse techniques are used during the test to maintain the junction temperature as close to the ambient temperature as possible.

## TYPICAL PERFORMANCE CHARACTERISTICS

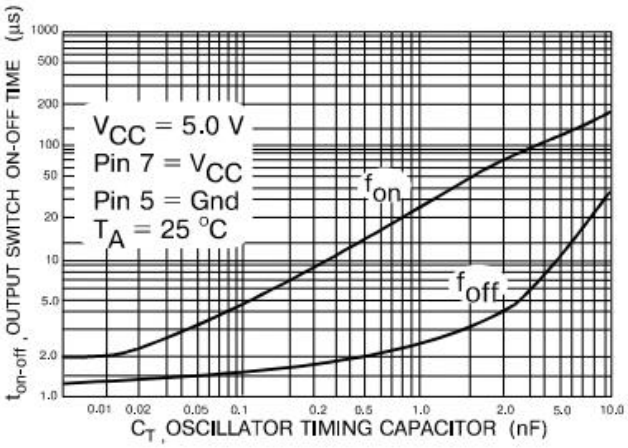


Fig.1.Output Switch on-off time versus Oscillator timing capacitor

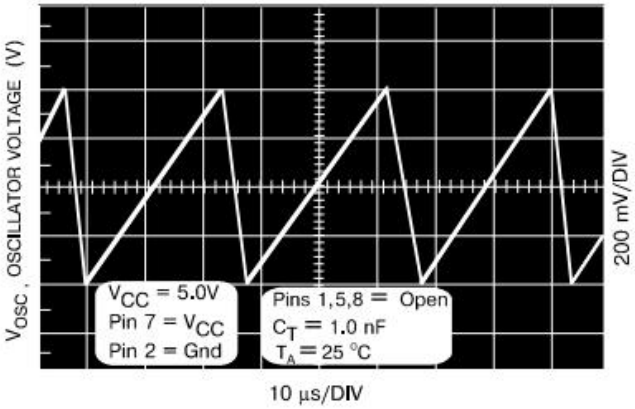


Fig.2.Timing capacitor waveform

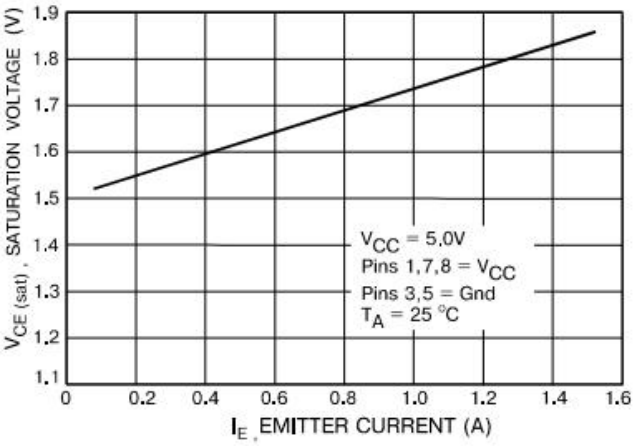


Fig.3. Emitter follower configuration output saturation voltage versus Emitter current

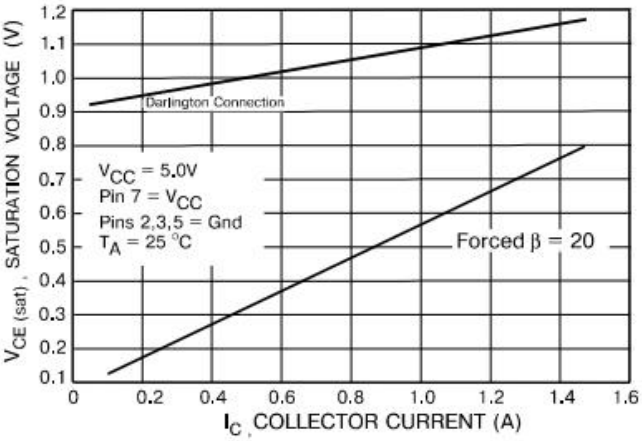


Fig.4. Common emitter configuration output saturation voltage versus Collector current

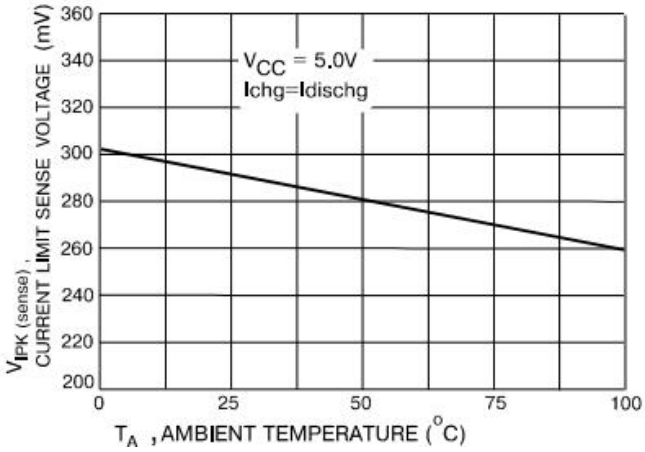


Fig.5. Current limit sense voltage versus Temperature

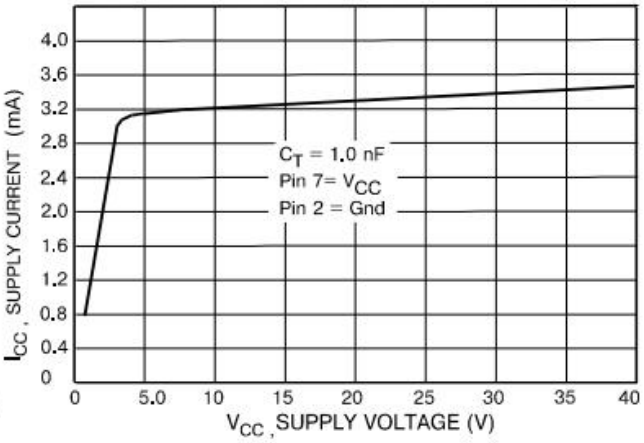


Fig.6. Standby supply current versus Supply voltage

## APPLICATION INFORMATION

**Fig.1. Step–up converter**

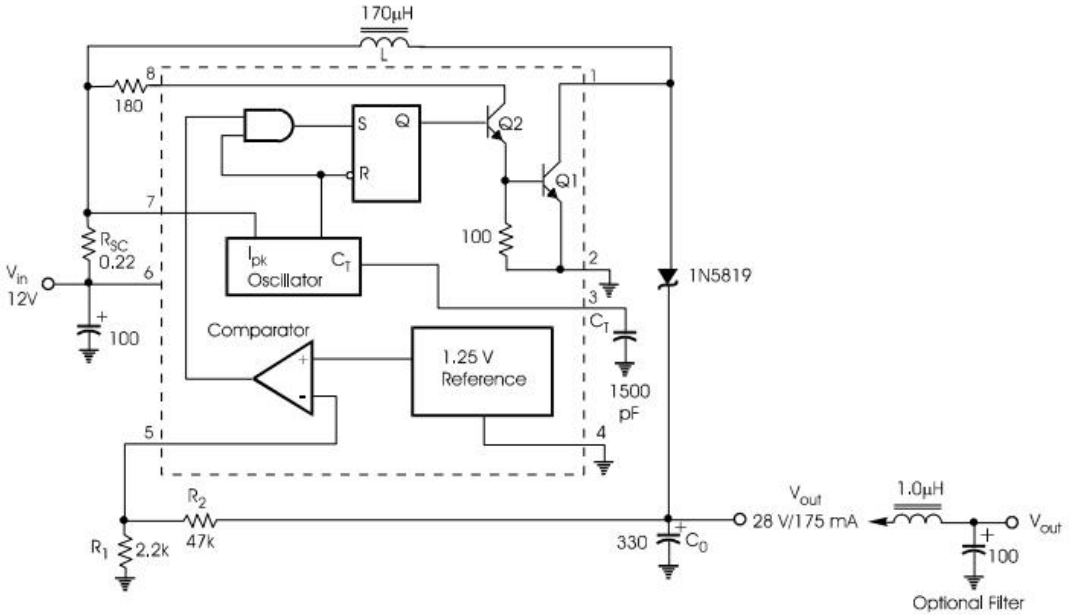


**Fig.2. External current boost connections for IC Peak greater than 1.5A**

**2a. External NPN switch**

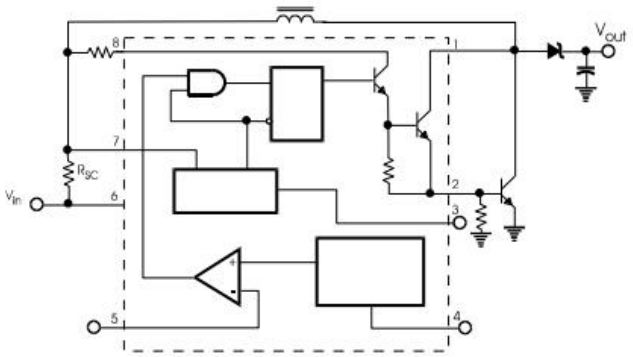


**2b. External NPN saturated switch**

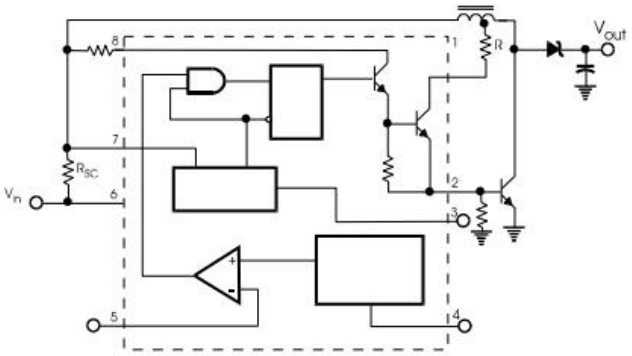


Note: R → 0 at constant $V_{IN}$

**Fig.3. Step-down Converter**

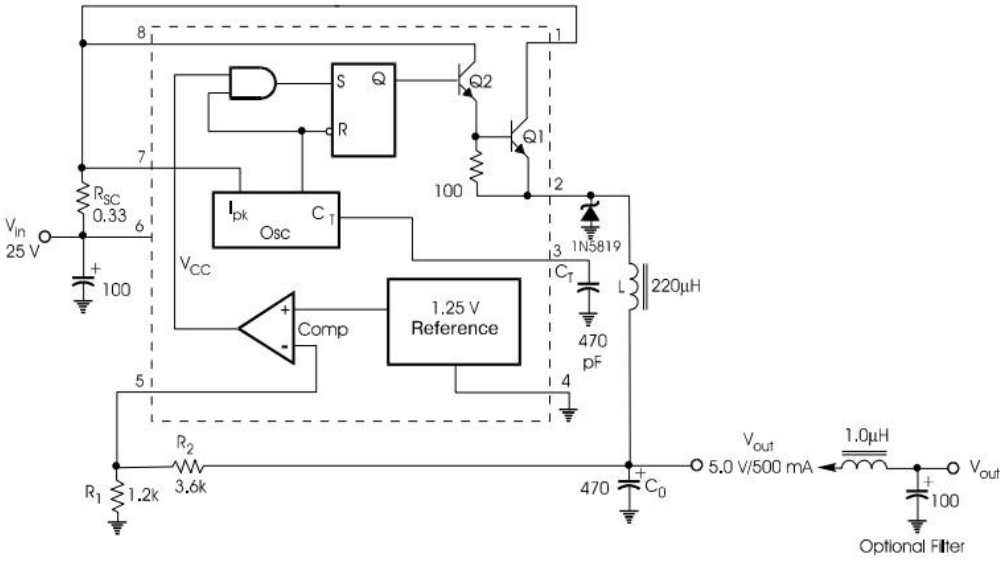


**Fig.4. External current boost connections for $I_{C\ Peak}$ greater than 1.5A**

**4a. External NPN switch**

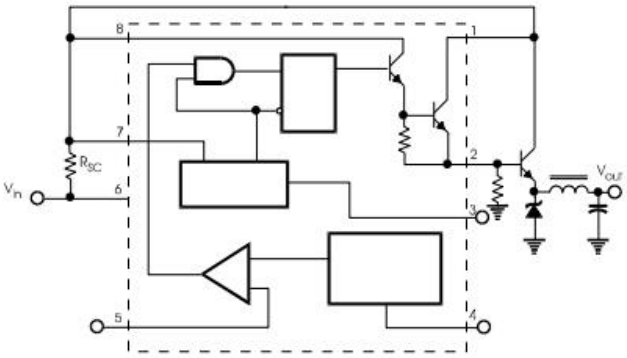


**4b. External PNP saturated switch**

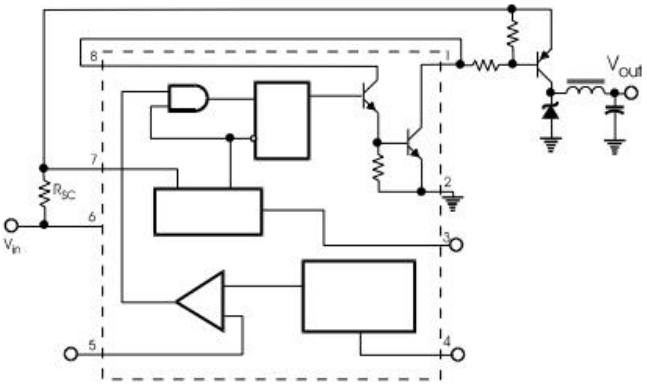

**Fig.5. Voltage inverting converter**

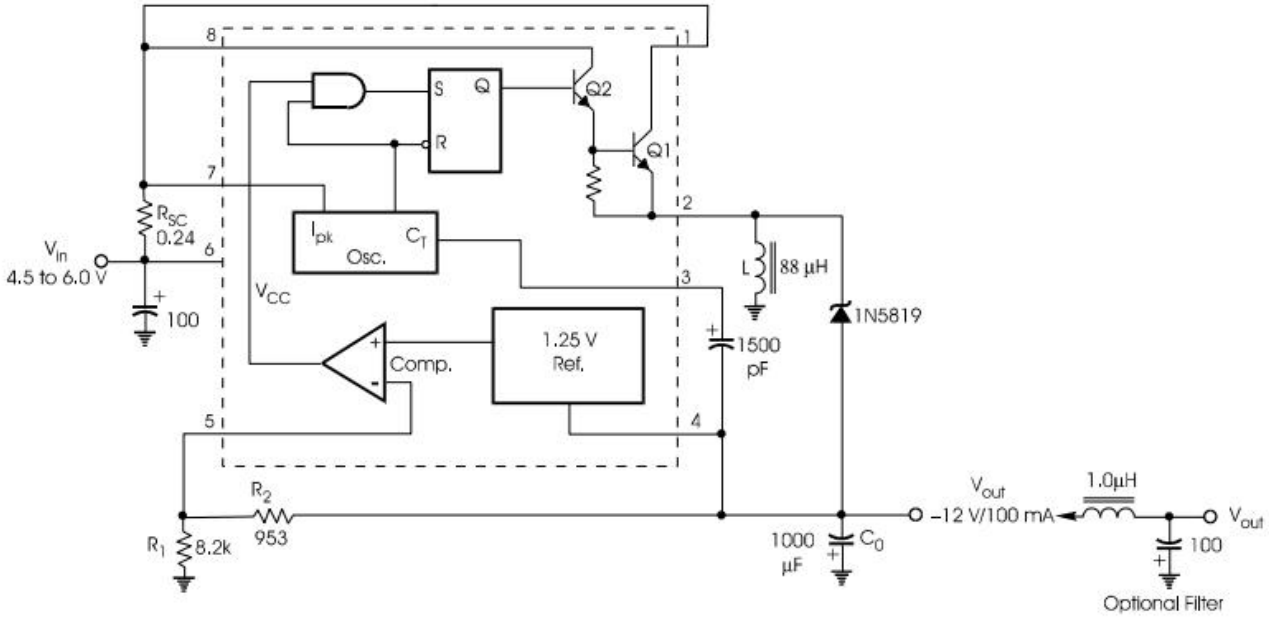


**Fig.6. External current boost connections for $I_{C\ Peak}$ greater than 1.5A**

**6a. External NPN switch**

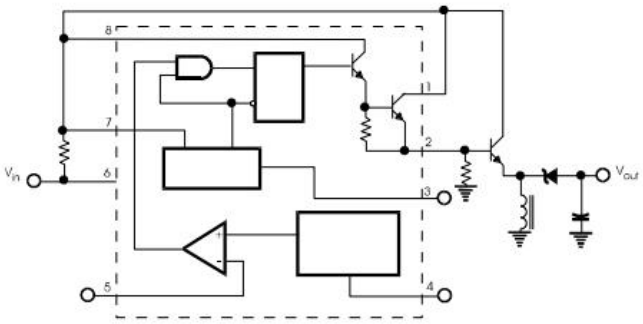

**6b. External PNP saturated switch**

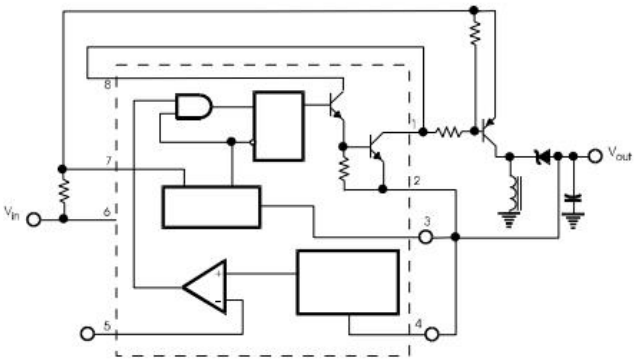

## DESIGN FORMULA

| Calculation | Step-up | Step-down | Voltage-inverting |
|---|---|---|---|
| ton | $\frac{Vout + VF - Vin(min)}{Vin(min) - Vsat}$ | $\frac{Vout + VF}{Vin(min) - Vsat - Vout}$ | $\frac{\lvert Vout\rvert + VF}{Vin + Vsat}$ |
| (ton + toff)max | $\frac{1}{fmin}$ | $\frac{1}{fmin}$ | $\frac{1}{fmin}$ |
| $C_T$ | $4.0 \times 10^{-5}$ ton | $4.0 \times 10^{-5}$ ton | $4.0 \times 10^{-5}$ ton |
| $I_{pk(switch)}$ | $2I_{out\,(max)}\left(\frac{ton}{toff} + 1\right)$ | $2I_{out(max)}$ | $2I_{out\,(max)}\left(\frac{ton}{toff} + 1\right)$ |
| Rsc | $0.3/I_{pk(Switch)}$ | $0.3/I_{pk(Switch)}$ | $0.3/I_{pk(Switch)}$ |
| L(min) | $\left(\frac{Vin(min)-Vsat}{Ipk\,(switch)}\right)\times ton(max)$ | $\left(\frac{Vin(min)-Vsat-Vout}{Ipk\,(switch)}\right)\times ton(max)$ | $\left(\frac{Vin(min)-Vsat}{Ipk\,(switch)}\right)\times ton(max)$ |
| Co | $9\,\frac{Ioutton}{Vripple(pp)}$ | $\frac{Ipk(switch)(ton + toff)}{8Vripple(pp)}$ | $9\,\frac{Ioutton}{Vripple(pp)}$ |

**TERMS AND DEFINITIONS**

$V_{sat}$ – Saturation voltage of the output switch.

$V_F$ – Forward voltage drop of the output rectifier.

**The following power supply characteristics must be chosen:**

$V_{in}$ – Nominal input voltage.

$V_{out}$ – Desired output voltage, $|Vout| = 1.25\left(1 + \frac{R2}{R1}\right)$

$f_{min}$ – Minimum desired output switching frequency at the selected values of $V_{in}$ and $I_{out}$.

$V_{ripple(p\text{-}p)}$ – Desired peak-to-peak output ripple voltage. In practice, the calculated capacitor value will need to be increased due to its equivalent series resistance and board layout. The ripple voltage should be kept to a low value since it will directly affect the line and load regulation.

# PHYSICAL DIMENSIONS

## DIP-8

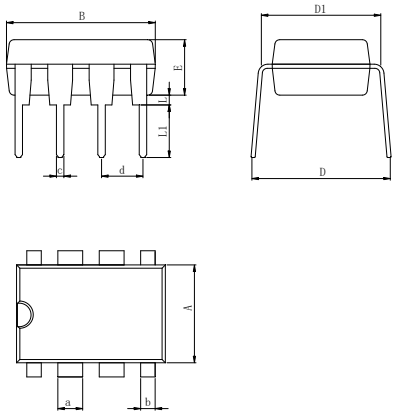


| Dimensions In Millimeters(DIP-8) | | | | | | | | | | | |
|---|---|---|---|---|---|---|---|---|---|---|---|
| **Symbol:** | A | B | D | D1 | E | L | L1 | a | b | c | d |
| **Min:** | 6.10 | 9.00 | 8.10 | 7.42 | 3.10 | 0.50 | 3.00 | 1.50 | 0.85 | 0.40 | 2.54 BSC |
| **Max:** | 6.68 | 9.50 | 10.9 | 7.82 | 3.55 | 0.70 | 3.60 | 1.55 | 0.90 | 0.50 | |

## SOP-8

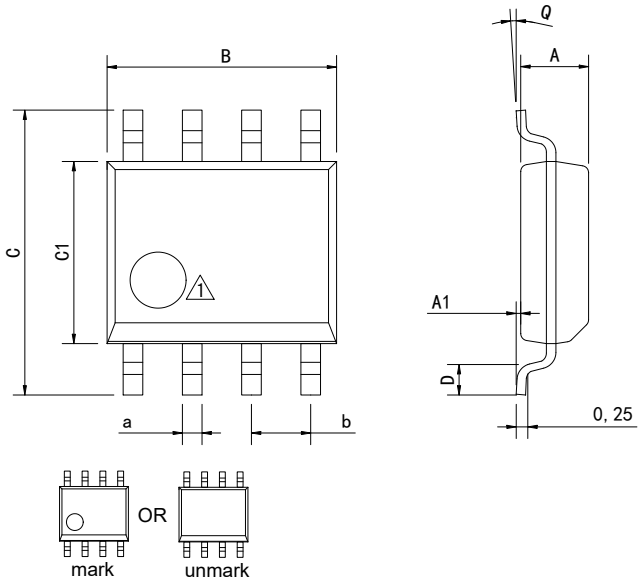


1 Package top mark may be in lower left corner or unmark

| Dimensions In Millimeters(SOP-8) | | | | | | | | | |
|---|---|---|---|---|---|---|---|---|---|
| **Symbol:** | A | A1 | B | C | C1 | D | Q | a | b |
| **Min:** | 1.35 | 0.05 | 4.90 | 5.80 | 3.80 | 0.40 | 0° | 0.35 | 1.27 BSC |
| **Max:** | 1.55 | 0.20 | 5.10 | 6.20 | 4.00 | 0.80 | 8° | 0.45 | |

## PHYSICAL DIMENSIONS

MSOP-8

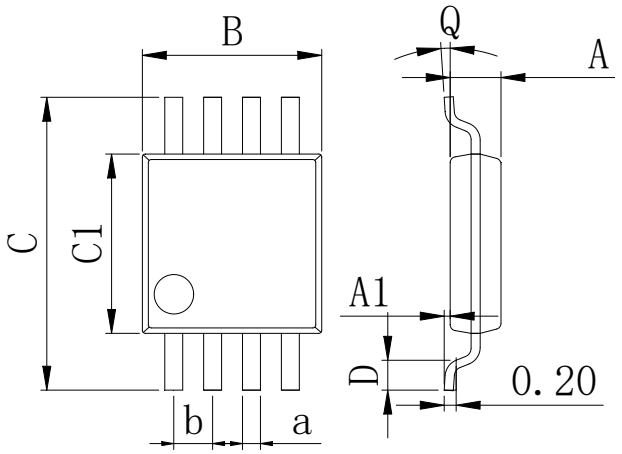


| Dimensions In Millimeters(MSOP-8) | | | | | | | | | |
|---|---|---|---|---|---|---|---|---|---|
| **Symbol:** | A | A1 | B | C | C1 | D | Q | a | b |
| **Min:** | 0.80 | 0.05 | 2.90 | 4.75 | 2.90 | 0.35 | 0° | 0.25 | 0.65 BSC |
| **Max:** | 0.90 | 0.20 | 3.10 | 5.05 | 3.10 | 0.75 | 8° | 0.35 | |

## REVISION HISTORY

| REVISION NUMBER | DATE | REVISION | PAGE |
|---|---|---|---|
| V1.0 | 2014-6 | New | 1-12 |
| V1.1 | 2020-9 | Update encapsulation type、Updated DIP-8 dimension | 1、9 |
| V1.2 | 2024-1 | Update Lead Temperature | 3 |
| V1.3 | 2025-12 | Update important statements、Update SOP-8 Dimension drawing | 9、12 |

**IMPORTANT STATEMENT:**

Huaguan Semiconductor reserves the right to change products and services offered without prior notice. Customers should obtain the latest relevant information before placing orders and verify that such information is current and complete. Huaguan Semiconductor assumes no responsibility or liability for altered documents.

Customers are responsible for complying with safety standards and implementing safety measures when using Huaguan Semiconductor products in system design and end-product manufacturing. You assume full responsibility for: selecting the appropriate Huaguan Semiconductor products for your application; designing, validating, and testing your application; and ensuring that your application complies with applicable standards and all other safety, security, or other requirements. This is to prevent potential risks that may lead to personal injury or property damage.

Huaguan Semiconductor products are not approved for use in life support, military, aerospace, or other high-risk applications. Huaguan products are neither intended nor warranted for use in such systems or equipment. Any failure or malfunction may lead to personal injury or severe property damage. Such applications are deemed "Unsafe Use." Unsafe Use includes, but is not limited to: surgical and medical equipment, nuclear energy control equipment, aircraft or spacecraft instruments, control or operation of vehicle power, braking, or safety systems, traffic signal instruments, all types of safety devices, and any other applications intended to support or sustain life. Huaguan Semiconductor shall not be liable for consequences resulting from Unsafe Use in these fields. Users must independently evaluate and assume all risks. Any issues, liabilities, or losses arising from the use of products beyond their approved applications shall be solely borne by the user. Users may not claim any compensation from Huaguan Semiconductor based on these terms. If any third party claims against Huaguan Semiconductor due to such Unsafe Use, the user shall compensate Huaguan Semiconductor for all resulting damages and liabilities.

Huaguan Semiconductor provides technical and reliability data (including datasheets), design resources (including reference designs), application or other design advice, web tools, safety information, and other resources for its semiconductor products. However, no guarantee is made that these resources are free from defects, and no express or implied warranties are provided. The use of testing and other quality control techniques is limited to Huaguan Semiconductor's quality assurance scope. Not all parameters of each device are tested.

Huaguan Semiconductor's documentation authorizes you to use these resources only for developing applications related to the products described herein. You are not granted rights to any other intellectual property of Huaguan Semiconductor or any third party. Any other reproduction or display of these resources is strictly prohibited. You shall fully indemnify Huaguan Semiconductor and its agents against any claims, damages, costs, losses, and liabilities arising from your use of these resources. Huaguan Semiconductor shall not be held responsible.