Zero-Drift, 350kHz 26μA, Rail-Rail I/O Operational Amplifiers

Features

- High DC Precision:
  - ±15 μV (maximum) VOS with a Drift of ±50 nV/℃ (maximum)
  - A_{VOL}: 112 dB (minimum, V_S = 5.5V)
  - PSRR: 112 dB (minimum, V_S = 5.5V)
  - CMRR: 112 dB (minimum, V_S = 5.5V)
  - V_n : 1.1 μV_{PP} (typical, f = 0.1 to 10 Hz)
- 350 kHz Bandwidth and 0.22 V/μs Slew Rate
- Settling Time to 0.1% with 1V Step: 6 μs
- Overload Recovery Time to 0.1%: 55 μs
- 26 μA per Amplifier Low Power and 1.8 V to 5.5 V Wide Supply Voltage Range
- Operating Temperature Range: −40℃ to +125℃

Ordering Information

DEVICE	Package Type	MARKING	Packing	Packing Qty
OPA330M/TR	SOP-8	A330	REEL	2500pcs/Reel
OPA330M5/TR	SOT-23-5	A330	REEL	3000pcs/Reel
OPA330M7/TR	SC70-5(SOT-353)	A330	REEL	3000pcs/Reel
OPA2330DQ2/TR	DFN-8 2*2	A2330	REEL	5000pcs/Reel*
OPA2330M/TR	SOP-8	A2330	REEL	2500pcs/Reel
OPA2330MM/TR	MSOP-8	A2330	REEL	3000pcs/Reel
OPA4330M/TR	SOP-14	OPA4330	REEL	2500pcs/Reel
OPA4330MT/TR	TSSOP-14	A4330	REEL	2500pcs/Reel

Note：SOT-353 equal to SC70-5 Package Type.

General Description

The OPAx330 family of amplifiers provides input offset voltage correction for very low offset and drift through the use of patented fast step response chopper stabilized techniques. This method constantly measures and compensates the input offset, eliminating drift over time and temperature and the effect of 1/f noise. This design breakthrough allows the combination of a gain bandwidth product of 350kHz and a high slew rate of 0.22V/μs, while only drawing 26 μA supply current. These devices are unity gain stable and have good Power Supply Rejection Ratio (PSRR) and Common Mode Rejection Ratio (CMRR).

The OPAx330 series are perfectly suited for applications that require precision amplification of low level signals, in which error sources cannot be tolerated, even in which high bandwidth and fast transition are needed. The rail-to-rail input and output swings make both high-side and low-side sensing easy. The OPAx330 series can operate with a single supply voltage as low as 1.8V for 2-cell battery applications.

The OPAx330 op-amps have enhanced EMI protection to minimize any electromagnetic interference from external sources, and have high electro-static discharge (ESD) protection (5-kV HBM). All models are specified over the extended industrial temperature range of −40℃ to +125℃.

Applications

- Precision current sensing
- Resistor thermal detectors
- Temperature, position and pressure sensors
- Medical equipment
- Electronic scales
- Strain gage amplifiers
- Thermocouple amplifiers

Pin Configurations (Top View)

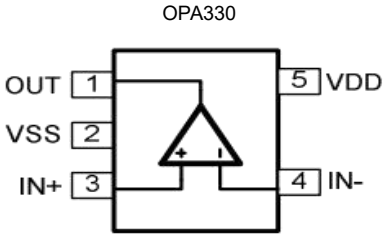

SOT23-5/SC70-5

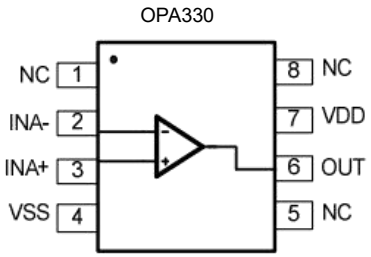

SOP-8

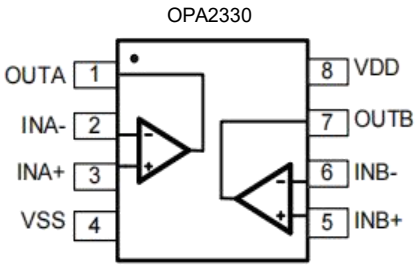

SOP-8/MSOP-8

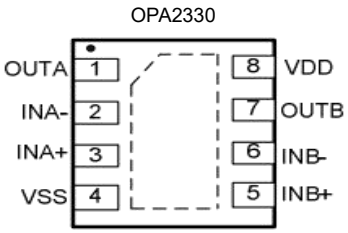

DFN-8 2*2

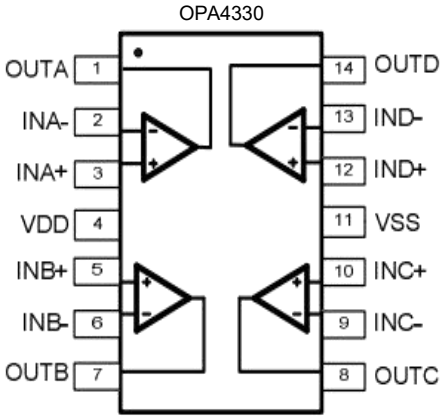

SOP-14/TSSOP-14

Figure 1. Pin Assignment Diagram

Limiting Value

In accordance with the Absolute Maximum Rating System (IEC 60134).

Parameter	Absolute Maximum Rating
Supply Voltage, V_{S+} to V_{S-}	10.0 V
Signal Input Terminals: Voltage, Current	V_{S-} – 0.3 V to V_{S+} + 0.3 V, ±10 mA
Output Short-Circuit	Continuous
Storage Temperature Range, T_{stg}	–65 ℃ to +150 ℃
Junction Temperature, T_J	150 ℃
Lead Temperature Range (Soldering 10 sec)	260 ℃

Note: Stress greater than those listed under Absolute Maximum Ratings may cause permanent damage to the device. This is a stress rating only and functional operation of the device at these or any other conditions outside those indicated in the operational sections of this specification are not implied. Exposure to absolute maximum rating conditions for extended periods may affect reliability.

ESD Rating

Parameter	Item	Value	Unit
Electrostatic Discharge Voltage	Human body model (HBM), per MIL-STD-883J / Method 3015.9 (1)	±5 000	V
	harged device model (CDM), per ESDA/JEDEC JS-002-2014 (2)	±2 000	
	Machine model (MM), per JESD22-A115C	±250	

(1) JEDEC document JEP155 states that 500-V HBM allows safe manufacturing with a standard ESD control process.

(2) JEDEC document JEP157 states that 250-V CDM allows safe manufacturing with a standard ESD control process.

Electrical Characteristics

V_S = 5.0V, T_A = +25℃, V_{CM} = V_S /2, V_O = V_S /2, and R_L = 10kΩ connected to V_S /2, unless otherwise noted. Boldface limits apply over the specified temperature range, T_A = −40 to +125 ℃.

Symbol	Parameter	Conditions	Min.	Typ.	Max.	Unit
OFFSET VOLTAGE						
V_{OS}	Input offset voltage			±3	±15	μV
V_{OS} TC	Offset voltage drift	T_A = −40 to +125 ℃		±10	±50	nV/℃
PSRR	Power supply rejection ratio	V_S = 2.0 to 5.5 V, V_{CM} < V_{S+} − 2V	112	126		dB
		T_A = −40 to +125 ℃	106			
INPUT BIAS CURRENT						
I_B	Input bias current			±70		pA
		T_A = +85 ℃		±150		
		T_A = +125 ℃		±700		
I_{OS}	Input offset current			±100		pA
NOISE						
V_n	Input voltage noise	f = 0.01 to 1 Hz		0.3		$μV_{P-P}$
		f = 0.1 to 10 Hz		1.1		
e_n	Input voltage noise density	f = 10 kHz		55		nV/√Hz
		f = 1 kHz		57		
I_n	Input current noise density	f = 1 kHz		50		fA/√Hz
INPUT VOLTAGE						
V_{CM}	Common-mode voltage range		V_{S-}–0.1		V_{S+}+0.1	V
CMRR	Common-mode rejection ratio	V_S = 5.5 V, V_{CM} = −0.1 to 5.5 V	112	130		dB
		V_{CM} = 0 to 5.3 V, T_A = −40 to +125℃	106			
		V_S = 2.0 V, V_{CM} = −0.1 to 2.0 V	102	122		
		V_{CM} = 0 to 1.8 V, T_A = −40 to +125 ℃	96			
INPUT IMPEDANCE						
R_{IN}	Input resistance		100			GΩ
C_{IN}	Input capacitance	Differential		2.0		pF
		Common mode		3.5		
OPEN-LOOP GAIN						
A_{VOL}	Open-loop voltage gain	R_L = 25 kΩ, V_O = 0.05 to 3.5 V	112	130		dB
		T_A = −40 to +125 ℃	106			
		R_L = 2 kΩ, V_O = 0.15 to 3.5 V	96	116		
		T_A = −40 to +125 ℃	90			
FREQUENCY RESPONSE						

GBW	Gain bandwidth product	f = 1 kHz		350		kHz
SR	Slew rate	G = +1, C_L = 100 pF, V_O = 1.5 to 3.5 V		0.22		V/μs
t_S	Settling time	To 0.1%, G = +1, 1V step		6		μs
		To 0.01%, G = +1, 1V step		7		
t_{OR}	Overload recovery time	To 0.1%, VIN * Gain > VS		55		μs
OUTPUT						
V_{OH}	High output voltage swing	R_L = 25 kΩ		V_{S+}–5		mV
		R_L = 2 kΩ	V_{S+}–100	V_{S+}–60		
V_{OL}	Low output voltage swing	R_L = 25 kΩ		V_{S-}+4		mV
		R_L = 2 kΩ		V_{S-}+40	VS–+66	
Z_{OUT}	Open-loop output impedance	f = 350 kHz, I_O = 0		2		kΩ
I_{SC}	Short-circuit current	Source current through 10Ω		40		mA
		Sink current through 10Ω		50		
POWER SUPPLY						
V_S	Operating supply voltage	T_A = 0 to +70 ℃	1.8		5.5	V
		T_A = −40 to +125 ℃	2.0		5.5	
I_Q	Quiescent current (per amplifier)			26	39	μA
THERMAL CHARACTERISTICS						
T_A	Operating temperature range(1)		-40		+125	℃
θ_{JA}	Package Thermal Resistance	SOT-23-5		190		℃/W
		DFN8 2*2		80		
		MSOP-8		216		
		SOP-8		125		
		SOP-14		112		
		TSSOP-14		115		

NOTE(1) Operating temperature range: -40°C to +125°C. This product is designed for industrial grade applications. For automotive grade versions compliant with AEC-Q100, please conduct internal screening per the standard or contact our sales team for availability.

Typical Performance Characteristics

At T_A =+25℃, V_S =±2.5V, V_{CM}=V_S /2, R_L =10kΩ connected to V_S /2, and C_L =100pF, unless otherwise noted.

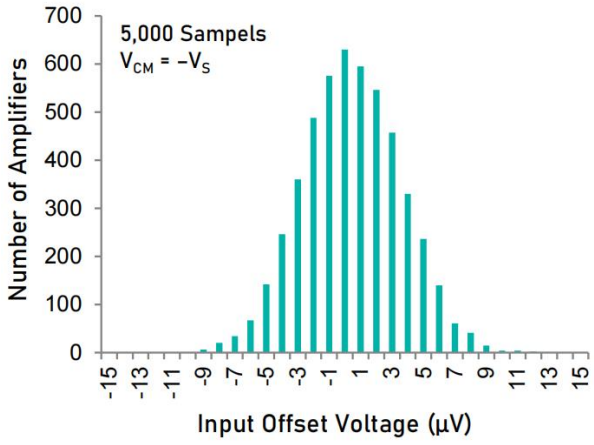

Input Offset Voltage Production Distribution.

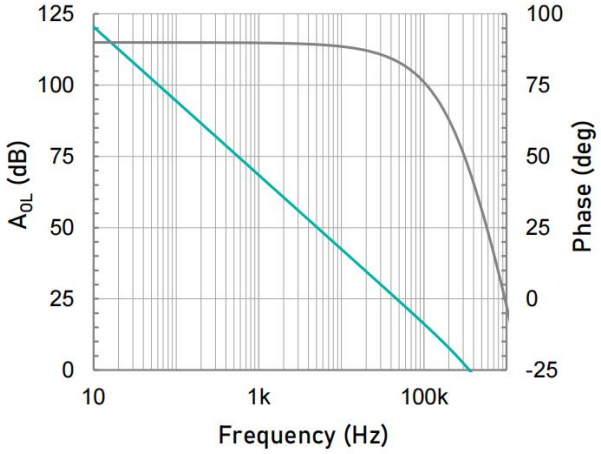

Open-loop Gain and Phase as a function of Frequency.

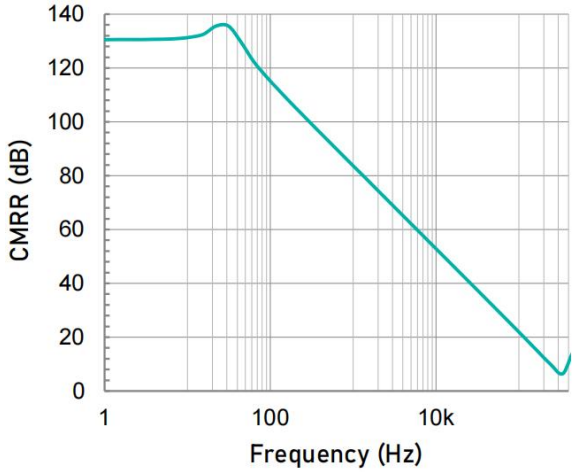

Common-mode Rejection Ratio as a function of Frequency.

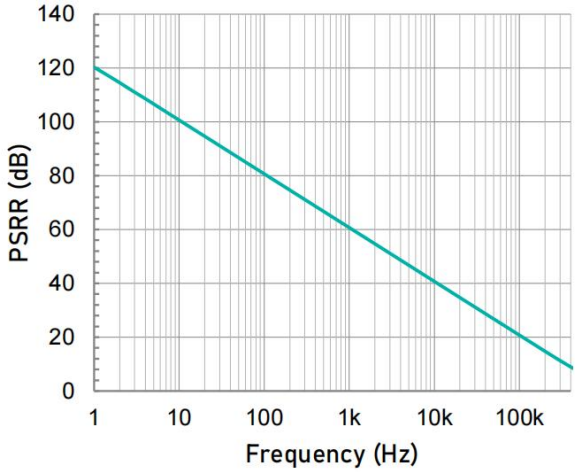

Power Supply Rejection Ratio as a function of Frequency.

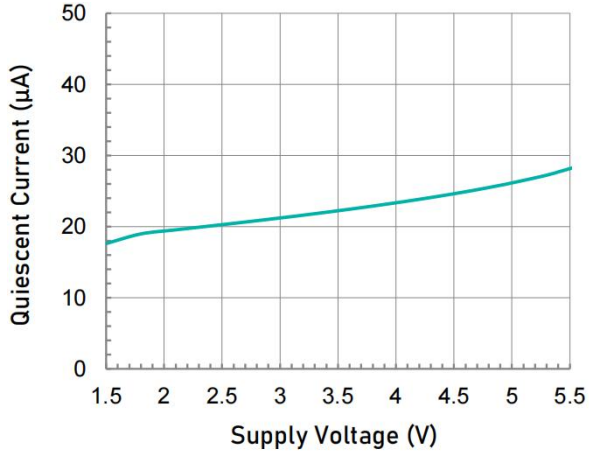

Quiescent Current as a function of Supply Voltage.

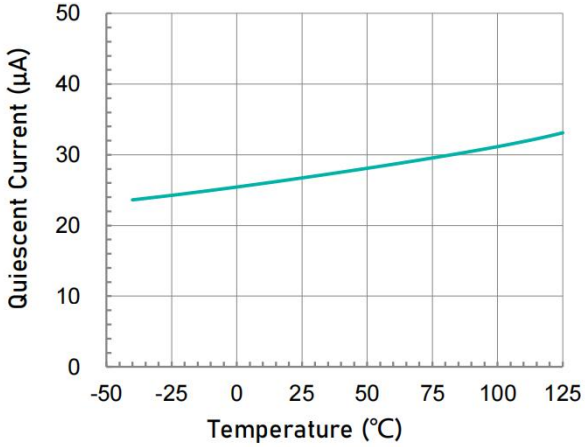

Quiescent Current as a function of Temperature.

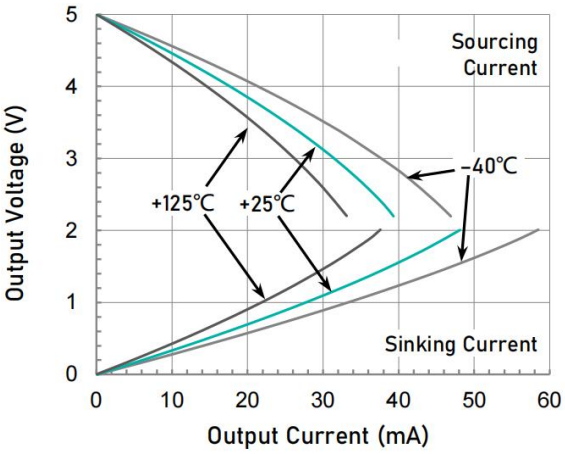

Output Voltage Swing as a function of Output Current.

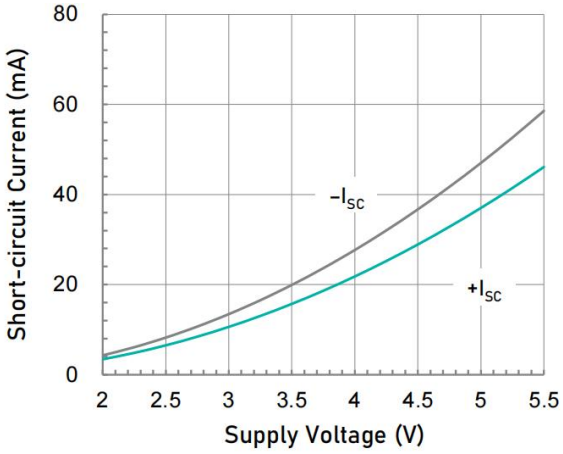

Short-circuit Current as a function of Supply Voltage.

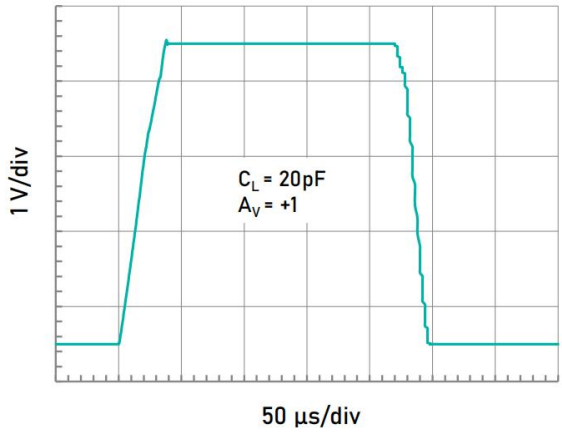

Large Signal Step Response (4V Step).

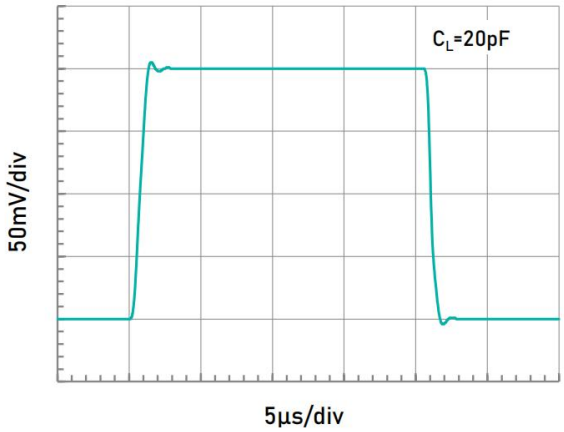

Small Signal Step Response (200mV Step).

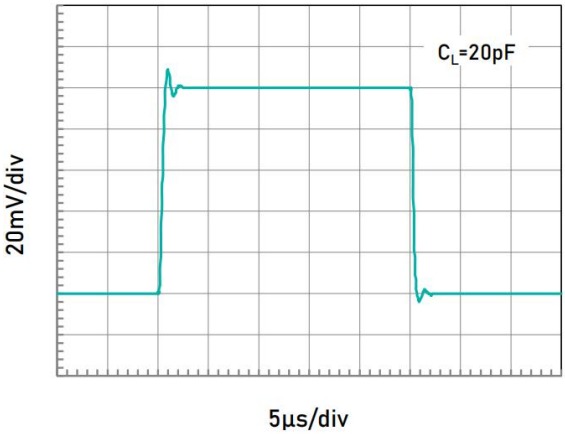

Small Signal Step Response (100mV Step).

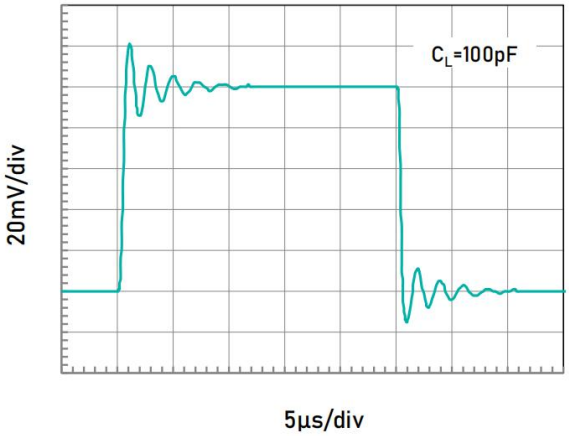

Small Signal Step Response (100mV Step).

Application Notes

The OPAx330 operational amplifiers are unity-gain stable and free from unexpected output phase reversal. These devices use a proprietary auto-calibration technique to provide low offset voltage and very low drift over time and temperature. For lowest offset voltage and precision performance, optimize circuit layout and mechanical conditions. Avoid temperature gradients that create thermoelectric (Seebeck) effects in the thermocouple junctions formed from connecting dissimilar conductors. Cancel these thermally-generated potentials by assuring they are equal on both input terminals. Other layout and design considerations include:

- Use low thermoelectric-coefficient conditions (avoid dissimilar metals).
- Thermally isolate components from power supplies or other heat sources.
- Shield operational amplifier and input circuitry from air currents, such as cooling fans.

Following these guidelines reduces the likelihood of junctions being at different temperatures, which can cause thermoelectric voltages of 0.1μV/℃ or higher, depending on materials used.

OPERATING VOLTAGE

The OPAx330 family is fully specified and ensured for operation from 1.8V to 5.5V (±0.9V to ±2.75V). In addition, many specifications apply from –40℃ to +125℃. Parameters that vary significantly with operating voltages or temperature are illustrated in the Typical Characteristics graphs.

NOTE: Supply voltages (V_{S+} to V_{S-}) higher than +10V can permanently damage the device.

INPUT VOLTAGE

The input common-mode voltage range of the OPAx330 series extends 100mV beyond the negative supply rail and reaches the positive supply rail. This performance is achieved with a complementary input stage: an N-channel input differential pair in parallel with a P-channel differential pair. The N-channel pair is active for input voltages close to the positive rail, typically V_{S+}–1.4V to the positive supply, whereas the P-channel pair is active for inputs from 200mV below the negative supply to approximately V_{S+}–1.4V. There is a small transition region, typically V_{S+}–1.2V to V_{S+}– 1V, in which both pairs are on. This 200mV transition region can vary up to 200mV with process variation. Thus, the transition region (both stages on) can range from V_{S+}–1.4V to V_{S+}–1.2V on the low end, up to V_{S+}–1V to V_{S+}–0.8V on the high end. Within this transition region, PSRR, CMRR, offset voltage, offset drift, and THD can be degraded compared to device operation outside this region.

The typical input bias current of the OPAx330 duringnormal operation is approximately 70pA. In overdriven conditions, the bias current can increase significantly. The most common cause of an overdriven condition occurs when the operational amplifier is outside of the linear range of operation. When the output of the operational amplifier is driven to one of the supply rails, the feedback loop requirements cannot be satisfied and a differential input voltage develops across the input pins. This differential input voltage results in activation of parasitic diodes inside the front-end input chopping switches that combine with electromagnetic interference (EMI) filter resistors to create the equivalent circuit. Notice that the input bias current remains within specification in the linear region.

INPUT EMI FILTER AND CLAMP CIRCUIT

Figure 1 shows the input EMI filter and clamp circuit. The OPAx330 op-amps have internal ESD protection diodes (D1, D2, D3, and D4) that are connected between the inputs and each supply rail. These diodes protect the input transistors in the event of electrostatic discharge and are reverse biased during normal operation. This protection scheme allows voltages as high as approximately 300mV beyond the rails to be applied at the input of either terminal without causing permanent damage. See the table of Absolute Maximum Ratings for more information.

Operational amplifiers vary in susceptibility to EMI. If conducted EMI enters the operational amplifier, the dc offset at the amplifier output can shift from its nominal value when EMI is present. This shift is a result of signal rectification associated with the internal semiconductor junctions. Although all operational amplifier pin functions can be affected by EMI, the input pins are likely to be the most susceptible. The EMI filter of the OPA330 family is composed of two 5-kΩ input series resistors (R_{S1} and R_{S2}), two common-mode capacitors (C_{CM1} and C_{CM2}), and a differential capacitor (C_{DM}). These RC networks set the −3dB low-pass cutoff frequencies at 35-MHz for common-mode signals, and at 22-MHz for differential signals.

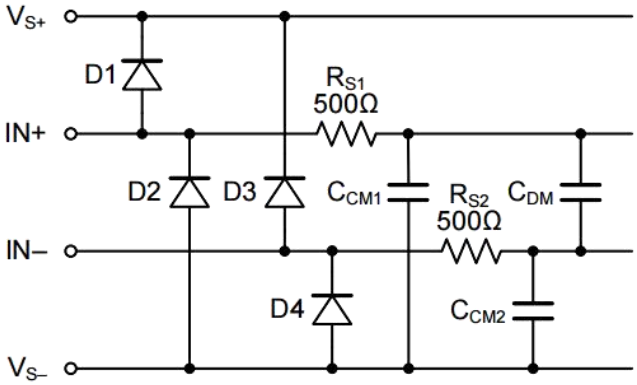

Figure 1. Input EMI Filter and Clamp Circuit

INTERNAL OFFSET CORRECTION

The OPAx330 operational amplifiers use an autocalibration technique with a time-continuous 500kHz operational amplifier in the signal path. This amplifier is zero-corrected every 2μs using a proprietary technique. Upon power up, the amplifier requires approximately 100μs to achieve specified V_{OS} accuracy. This design has no aliasing or flicker noise.

CAPACITIVE LOAD AND STABILITY

The OPAx330 family can safely drive capacitive loads of up to 500pF in any configuration. As with most amplifiers, driving larger capacitive loads than specified may cause excessive overshoot and ringing, or even oscillation. A heavy capacitive load reduces the phase margin and causes the amplifier frequency response to peak. Peaking corresponds to overshooting or ringing in the time domain. Therefore, it is recommended that external compensation be used if the OPAx330 op-amps must drive a load exceeding 500pF. This compensation is particularly important in the unity-gain configuration, which is the worst case for stability.

A quick and easy way to stabilize the op-amp for capacitive load drive is by adding a series resistor, R_{ISO}, between the amplifier output terminal and the load capacitance, as shown in Figure 2. R_{ISO} isolates the amplifier output and feedback network from the capacitive load. The bigger the R_{ISO} resistor value, the more stable V_{OUT} will be. Note that this method results in a loss of gain accuracy because R_{ISO} forms a voltage divider with the R_L .

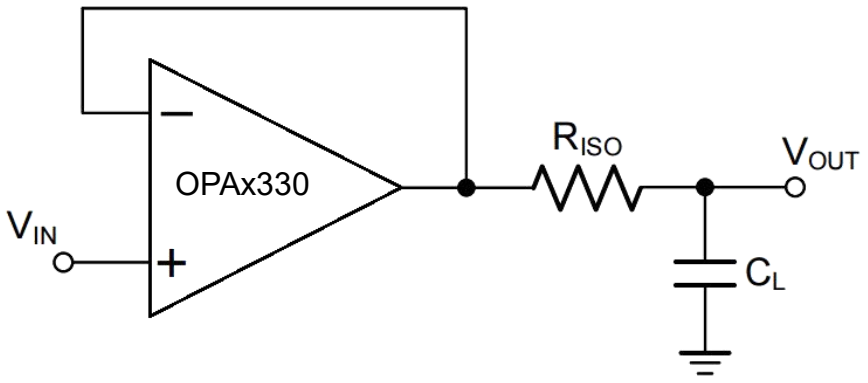

Figure 2. Indirectly Driving Heavy Capacitive Load

An improvement circuit is shown in Figure 3. It provides DC accuracy as well as AC stability. The R_F provides the DC accuracy by connecting the inverting signal with the output.

The C_F and R_{ISO} serve to counteract the loss of phase margin by feeding the high frequency component of the output signal back to the amplifier's inverting input, thereby preserving phase margin in the overall feedback loop.

For no-buffer configuration, there are two others ways to increase the phase margin: (a) by increasing the amplifier's gain, or (b) by placing a capacitor in parallel with the feedback resistor to counteract the parasitic capacitance associated with inverting node.

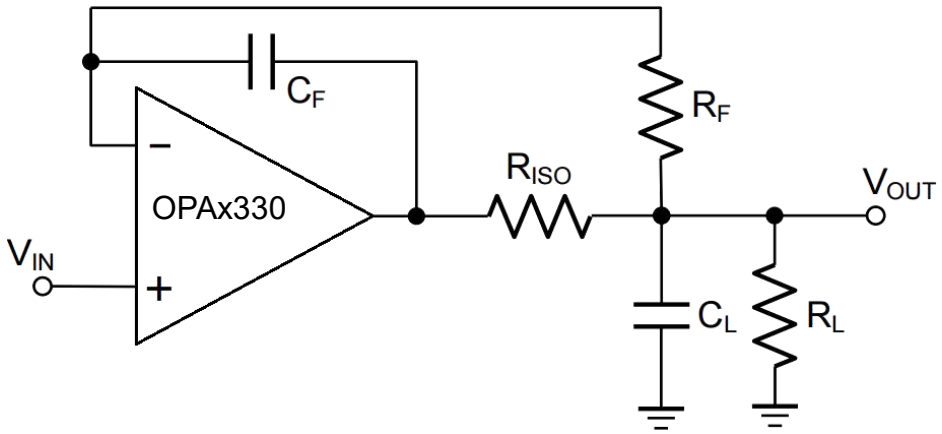

Figure 3. Indirectly Driving Heavy Capacitive Load with DC Accuracy

OVERLOAD RECOVERY

Overload recovery is defined as the time required for the operational amplifier output to recover from a saturated state to a linear state. The output devices of the operational amplifier enter a saturation region when the output voltage exceeds the rated operating voltage, either because of the high input voltage or the high gain. After the device enters the saturation region, the charge carriers in the output devices require time to return back to the linear state. After the charge carriers return back to the linear state, the device begins to slew at the specified slew rate. Thus, the propagation delay in case of an overload condition is the sum of the overload recovery time and the slew time. The overload recovery time for the OPA330 family is approximately 55μs.

EMI REJECTION RATIO

Circuit performance is often adversely affected by high frequency EMI. When the signal strength is low and transmission lines are long, an op-amp must accurately amplify the input signals. However, all opamp pins —

the non-inverting input, inverting input, positive supply, negative supply, and output pins — are susceptible to EMI signals. These high frequency signals are coupled into an op-amp by various means, such as conduction, near field radiation, or far field radiation. For example, wires and printed circuit board (PCB) traces can act as antennas and pick up high frequency EMI signals.

Amplifiers do not amplify EMI or RF signals due to their relatively low bandwidth. However, due to the nonlinearities of the input devices, op-amps can rectify these out of band signals. When these high frequency signals are rectified, they appear as a dc offset at the output.

The OPAx330 op-amps have integrated EMI filters at their input stage. A mathematical method of measuring EMIRR is defined as follows:

$EMIRR = 20 \log (V_{IN_PEAK} / \Delta V_{OS})$

MAXIMIZING PERFORMANCE THROUGH PROPER LAYOUT

To achieve the maximum performance of the extremely high input impedance and low offset voltage of the OPAx330 op-amps, care is needed in laying out the circuit board. The PCB surface must remain clean and free of moisture to avoid leakage currents between adjacent traces. Surface coating of the circuit board reduces surface moisture and provides a humidity barrier, reducing parasitic resistance on the board. The use of guard rings around the amplifier inputs further reduces leakage currents. Figure 4 shows proper guard ring configuration and the top view of a surface-mount layout. The guard ring does not need to be a specific width, but it should form a continuous loop around both inputs. By setting the guard ring voltage equal to the voltage at the non-inverting input, parasitic capacitance is minimized as well. For further reduction of leakage currents, components can be mounted to the PCB using Teflon standoff insulators.

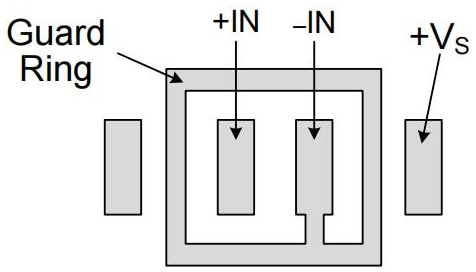

Figure 4. Use a guard ring around sensitive pins

Other potential sources of offset error are thermoelectric voltages on the circuit board. This voltage, also called Seebeck voltage, occurs at the junction of two dissimilar metals and is proportional to the temperature of the junction. The most common metallic junctions on a circuit board are solder-toboard trace and solder-to-component lead. If the temperature of the PCB at one end of the component is different from the temperature at the other end, the resulting Seebeck voltages are not equal, resulting in a thermal voltage error.

This thermocouple error can be reduced by using dummy components to match the thermoelectric error source. Placing the dummy component as close as possible to its partner ensures both Seebeck voltages are equal, thus canceling the thermocouple error. Maintaining a constant ambient temperature on the circuit board further reduces this error. The use of a ground plane helps distribute heat throughout the board and reduces EMI noise pickup.

INPUT-TO-OUTPUT COUPLING

To minimize capacitive coupling, the input and output signal traces should not be parallel. This helps reduce unwanted positive feedback.

Typical Application Circuits

PRECISION LOW-SIDE CURRENT SHUNT SENSING

Many applications require the sensing of signals near the positive or negative rails. Current shunt sensing is one such application and is mostly used for feedback control systems. It is also used in a variety of other applications, including power metering, battery fuel gauging, and feedback controls in industrial applications. In such applications, it is desirable to use a shunt with very low resistance to minimize series voltage drop. This configuration not only minimizes wasted power, but also allows the measurement of high currents while saving power.

A typical shunt may be 100mΩ. At a measured current of 1A, the voltage produced from the shunt is 100mV, and the amplifier error sources are not critical. However, at low measured current in the 1mA range, the 100μV generated across the shunt demands a very low offset voltage and drift amplifier to maintain absolute accuracy.

The unique attributes of a zero drift amplifier provide a solution. Figure 5 shows a low-side current sensing circuit using the OPAx330. The OPAx330 are configured as difference amplifiers with a gain of 1000. Although the OPAx330 have high CMRR, the CMRR of the system is limited by the external resistors. Therefore, the key to high CMRR for the system is resistors that are well matched from both the resistive ratio and relative drift, where R1 /R2 = R3 /R4 . The transfer function is given by:

$$V_{OUT} = V_{SHUNT} \times Gain_{Diff_Amp} = (R_{SHUNT} \times I_{LOAD}) \times (R_2 / R_1) = 100 \times I_{LOAD}$$

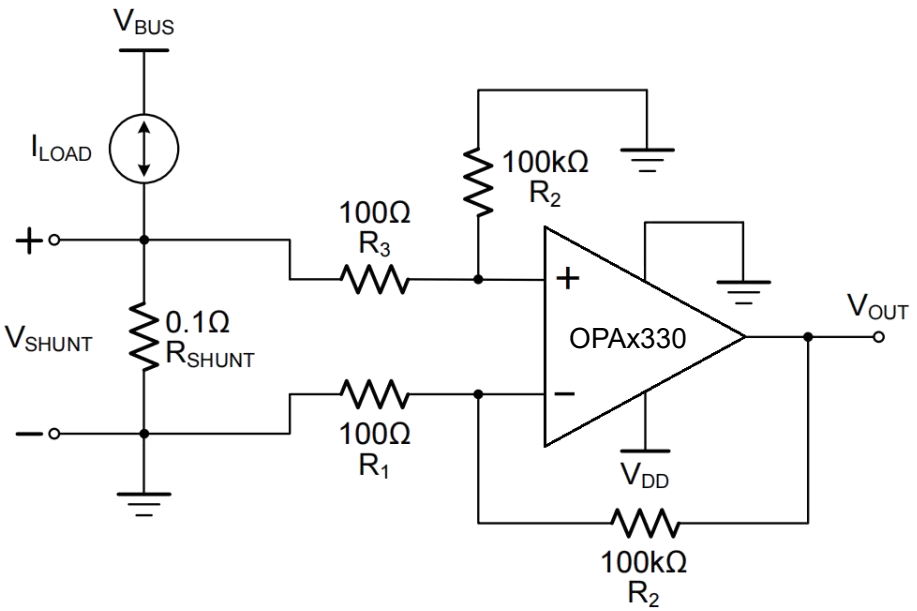

Figure 5. Low-Side Current Sensing Circuit

Any unused channel of the OPAx330 must be configured in unity gain with the input common-mode voltage tied to the midpoint of the power supplies.

BIDIRECTIONAL CURRENT-SENSING

This single-supply, low-side, bidirectional current-sensing solution detects load currents from –1A to +1A. The single-ended output spans from 110mV to 3.19V. This design uses the OPA330 because of its low offset voltage and rail-to-rail input and output. One of the amplifiers is configured as a difference amplifier and the other amplifier provides the reference voltage.

Figure 6 shows the solution. This solution has the following requirements:

- Supply voltage: 3.3V
- Input: –1A to +1A
- Output: 1.65V±1.54V (110mV to 3.19V)

There are two types of errors in this design: offset and gain. Gain errors are introduced by the tolerance of the shunt resistor and the ratios of R_4 to R_3 and, similarly, R_2 to R_1 . Offset errors are introduced by the voltage divider (R5 and R6) and how closely the ratio of R4 /R3 matche

Typical Application Circuits

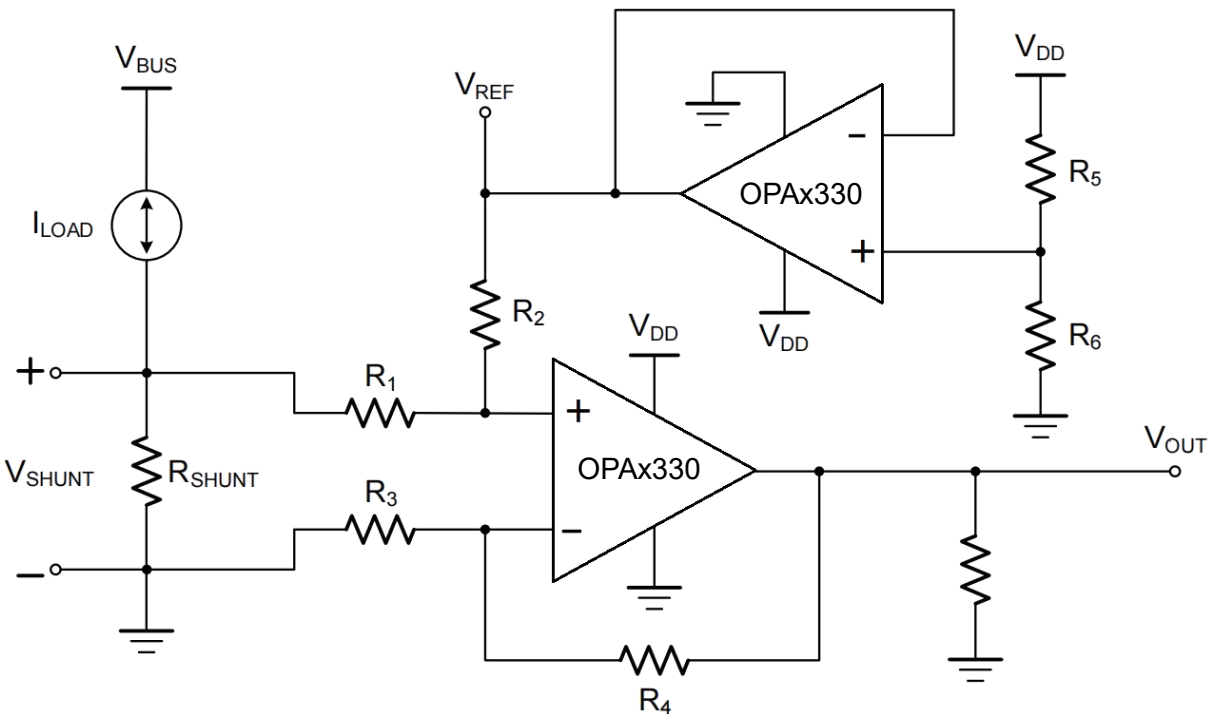

Figure 6. Bidirectional Current-Sensing Schematic

The load current, I_{LOAD}, flows through the shunt resistor (R_{SHUNT}) to develop the shunt voltage, V_{SHUNT}. The shunt voltage is then amplified by the difference amplifier consisting of U1A and R_1 through R_4 . The gain of the difference amplifier is set by the ratio of R_4 to R_3 . To minimize errors, set $R_2 = R_4$ and R1 = R_3 . The reference voltage, V_{REF}, is supplied by buffering a resistor divider using U1B. The transfer function is given by Equation 1.

$V_{OUT} = V_{SHUNT} \times Gain_{Diff_Amp} + V_{REF}$

Where

- $V_{SHUNT} = I_{LOAD} \times R_{SHUNT}$
- $GainDiff_Amp = R_4 / R_3$
- $V_{REF} = V_{DD} \times [R_6 / (R_5 + R_6)]$ (1)

There are two types of errors in this design: offset and gain. Gain errors are introduced by the tolerance of the shunt resistor and the ratios of R_4 to R_3 and, similarly, R_2 to R_1 . Offset errors are introduced by the voltage divider (R_5 and R_6) and how closely the ratio of R_4 /R_3 matches R_2 /R_1 . The latter value affects the CMRR of the difference amplifier, ultimately translating to an offset error.

The value of V_{SHUNT} is the ground potential for the system load because V_{SHUNT} is a low-side measurement. Therefore, a maximum value must be placed on V_{SHUNT}. In this design, the maximum value for V_{SHUNT} is set to 100mV. Equation 2 calculates the maximum value of the shunt resistor given a maximum shunt voltage of

100mV and maximum load current of 1A.

$$R_{SHUNT(MAX)} = V_{SHUNT(MAX)} / I_{LOAD(MAX)} = 100mV / 1A = 100\ m\Omega \quad (2)$$

The tolerance of R_{SHUNT} is directly proportional to cost. For this design, a shunt resistor with a tolerance of 0.5% was selected. If greater accuracy is required, select a 0.1% resistor or better

The load current is bidirectional; therefore, the shunt voltage range is –100mV to +100mV. This voltage is divided down by R_1 and R_2 before reaching the operational amplifier, U1A. Take care to ensure that thevoltage present at the non-inverting node of U1A is within the common-mode range of the device. Therefore, use an operational amplifier, such as the OPAx330, that has a common-mode range that extends below the negative supply voltage. Finally, to minimize offset error, note that the OPA330 has a typical offset voltage of merely ±3μV (±15μV maximum).

Given a symmetric load current of –1A to +1A, the voltage divider resistors (R5 and R6) must be equal. To be consistent with the shunt resistor, a tolerance of 0.5% was selected. To minimize power consumption, 10kΩ resistors were used.

To set the gain of the difference amplifier, the common-mode range and output swing of the OPA330 must be considered. Equation 3 and Equation 4 depict the typical common-mode range and maximum output swing, respectively, of the OPAx330 given a 3.3V supply.

- $-100mV < V_{CM} < 3.4V$ (3)
- $100mV < V_{OUT} < 3.2V$ (4)

The gain of the difference amplifier can now be calculated as shown in Equation 5.

$$G_{ainDiff_Amp} = (V_{OUT_MAX} - V_{OUT_MIN}) / [R_{SHUNT} \times (I_{MAX} - I_{MIN})]$$

$$= (3.2V - 100mV) / 100m\Omega \times [1A - (-1A)] = 15.5\ V/V \quad (5)$$

The resistor value selected for R_1 and R_3 was 1kΩ. 15.4kΩ was selected for R_2 and R_4 because this number is the nearest standard value. Therefore, the ideal gain of the difference amplifier is 15.4V/V.

The gain error of the circuit primarily depends on R_1 through R_4 . As a result of this dependence, 0.1% resistors were selected. This configuration reduces the likelihood that the design requires a two-point calibration. A simple one-point calibration, if desired, removes the offset errors introduced by the 0.5% resistors.

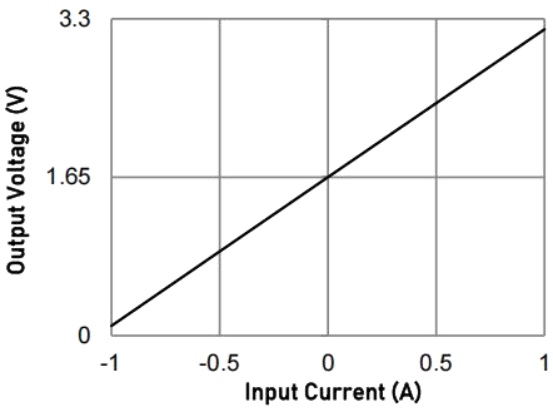

Figure 7. Bidirectional Current-Sensing Circuit Performance: Output Voltage vs. Input Current

HIGH-SIDE VOLTAGE-TO-CURRENT (V-I) CONVERTER

The circuit shown in Figure 8 is a high-side voltage-to-current (V-I) converter. It translates in input voltage of 0V to 2V to and output current of 0mA to 100mA.

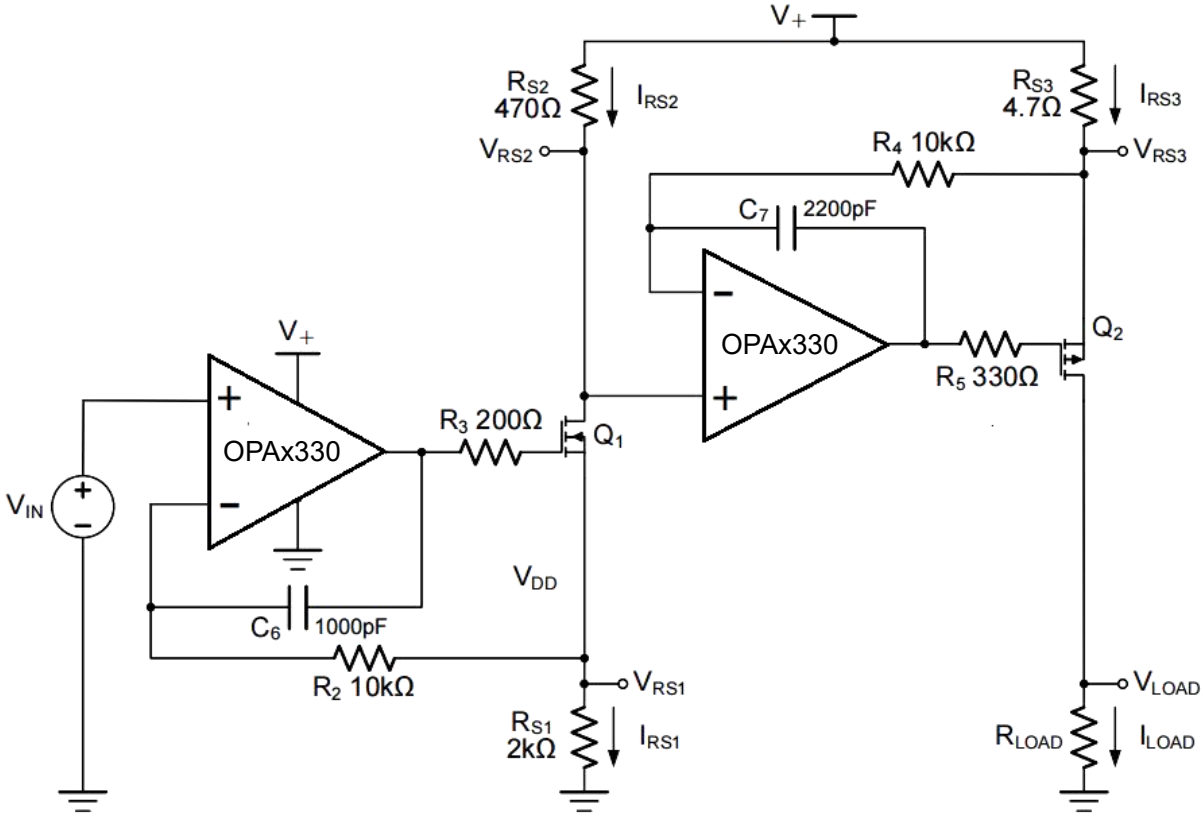

Figure 8. Bidirectional Current-Sensing Schematic

The design requirements are as follows:

- Supply Voltage: 5V DC
- Input: 0V to 2V DC
- Output: 0mA to 100mA DC

The V-I transfer function of the circuit is based on the relationship between the input voltage, V_{IN}, and the three current sensing resistors, R_{S1} , R_{S2} , and R_{S3} . The relationship between V_{IN} and R_{S1} determines the current that flows through the first stage of the design. The current gain from the first stage to the second stage is based on the relationship between R_{S2} and R_{S3} .

For a successful design, pay close attention to the dc characteristics of the operational amplifier chosen for the application. To meet the performance goals, this application benefits from an operational amplifier with low offset voltage, low temperature drift, and rail-to-rail output. The OPA330 CMOS operational amplifier is a highprecision, typically 3μV offset, 0.01μV/℃ drift amplifier optimized for low-voltage, single-supply operation with an output swing to within 15mV (at RL = 10kΩ) of the positive rail. The OPAx330 family uses chopping techniques to provide low initial offset voltage and near-zero drift over time and temperature. Low offset voltage and low drift reduce the offset error in the system, making these devices appropriate for precise dc control. The railto-rail output stage of the OPA330 ensures that the output swing of the operational amplifier is able to fully control the gate of the MOSFET devices within the supply rails.

Figure 9 shows the measured transfer function for this circuit. The low offset voltage and offset drift of the OPAx330 facilitate excellent dc accuracy for the circuit.

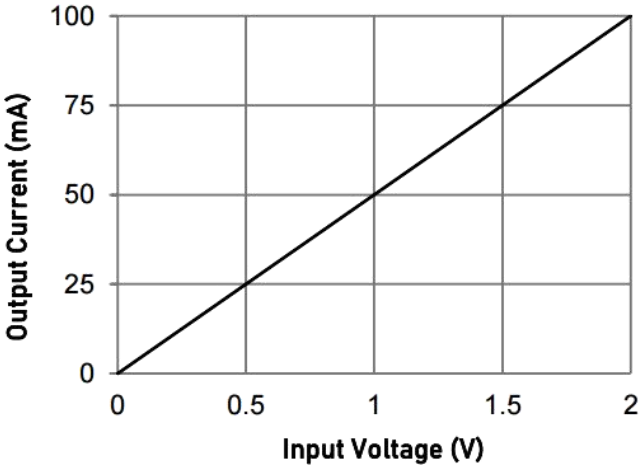

Figure 9. Measured Transfer Function for High-Side V-I Converter

SINGLE-SUPPLY INSTRUMENTATION AMPLIFIER

The extremely low offset voltage and drift, high open-loop gain, high common-mode rejection, and high power supply rejection of the OPAx330 make them excellent op-amp choices as discrete, single-supply instrumentation amplifiers.

Figure 10 shows the classic 3-op-amp instrumentation amplifier using the OPA330. The key to high CMRR for the instrumentation amplifier are resistors that are well matched for both the resistive ratio and relative drift. For true difference amplification, matching of the resistor ratio is very important, where:

- $R_5 / R_2 = R_6 / R_4$
- $R_{G1} = R_{G2}$, $R_1 = R_3$, $R_2 = R_4$, $R_5 = R_6$
- $V_{OUT} = (V_{IN1} – V_{IN2}) \times (1 + R_1 / R_{G1}) \times (R_5 / R_2)$

The resistors are important in determining the performance over manufacturing tolerances, time, and temperature. Assuming a perfect unity-gain difference amplifier with infinite common-mode rejection, a 1% tolerance resistor matching results in only 34dB of common-mode rejection. Therefore, at least 0.01% or better resistors are recommended.

To build a discrete instrumentation amplifier with external resistors without compromising on noise, pay close attention to the resistor values chosen. RG1 and RG2 each have thermal noise that is amplified by the total noise gain of the instrumentation amplifier and, therefore, a sufficiently low value must be chosen to reduce thermal noise contribution at the output while still providing an accurate measurement.

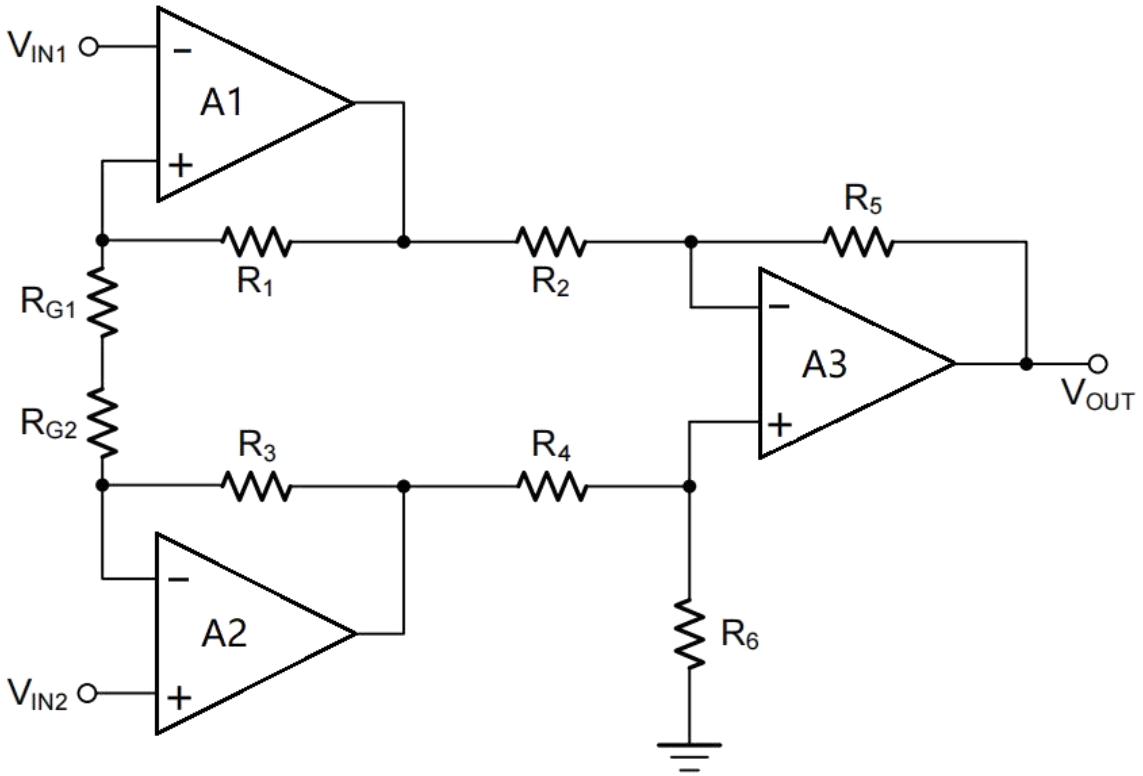

Figure 10. Discrete 3-Op-amp Instrumentation Amplifier

Figure 11 shows the external resistors noise contribution referred to the output .

Resistor	Value	Resistor Thermal Noise	Thermal Noise Referred to Output
R_{G1}	0.4 kΩ	2.57 nV/√Hz	128.30 nV/√Hz
R_{G2}	0.4 kΩ	2.57 nV/√Hz	128.30 nV/√Hz
R_1	10 kΩ	12.83 nV/√Hz	25.66 nV/√Hz
R_2	10 kΩ	12.83 nV/√Hz	25.66 nV/√Hz
R_3	10 kΩ	12.83 nV/√Hz	25.66 nV/√Hz
R_4	10 kΩ	12.83 nV/√Hz	25.66 nV/√Hz
R_5	20 kΩ	18.14 nV/√Hz	18.14 nV/√Hz
R_6	20 kΩ	18.14 nV/√Hz	18.14 nV/√Hz

Figure 11. Thermal Noise Contribution Example

Note that A1 and A2 have a high gain of 1 + R1 /RG1 . Therefore, use a high precision, low offset voltage and low noise amplifier for A1 and A2, such as the OPAx330. Conversely, A3 operates at a much lower gain and has a different set of op-amp requirements. Its input noise, referred to the overall instrumentation amplifier input, is divided by the first stage gain and is not as important. Note that the input offset voltage and the input voltage noise of the amplifiers are also amplified by the overall noise gain.

Any unused channel of the OPAx330 must be configured in unity gain with the input common-mode voltage tied to the midpoint of the power supplies.

Understanding how noise impacts a discrete instrumentation amplifier or a difference amplifier (the second stage of a 3-op-amp instrumentation amplifier) is important, because they are commonly used in many different applications.

LOAD CELL (STRAIN GAGE) SENSOR SIGNAL CONDITIONING

The OPAx330, with its ultralow offset, drift, and noise, is well suited to signal condition a low level sensor output with high gain and accuracy. A weigh scale (load cell) is an example of an application with such requirements. Figure 12 shows a configuration for a single-supply, precision, weigh scale measurement system. The OPA330 is used at the front end for amplification of the low level signal from the load cell.

Current flowing through a PCB trace produces an IR voltage drop; with longer traces, this voltage drop can be several millivolts or more, introducing a considerable error. A 1 inch long, 0.005 inch wide trace of 1 oz copper has a resistance of approximately 100mΩ at room temperature. With a load current of 10mA, the resistance can introduce a 1mV error.

Therefore, a 6-wire load cell is used in the circuit. The load cell has two sense pins, in addition to excitation, ground, and two output connections. The sense pins are connected to the high side (excitation pin) and low side (ground pin) of the Wheatstone bridge. The voltage across the bridge can then be accurately measured regardless of voltage drop due to wire resistance. The two sense pins are also connected to the analog-todigital converter (ADC) reference inputs for a ratio-metric configuration that is immune to low frequency changes in the power supply excitation voltage.

The OPA330 is configured as the first stage of a 3-op-amp instrumentation amplifier to amplify the low level amplitude signal from the load cell by a factor of $1 + 2R_1 / R_G$. Capacitors C_1 and C_2 are placed in the feedback loops of the amplifiers and interact with R_1 and R_2 to perform low-pass filtering. This filtering limits the amount of noise entering the Σ-Δ ADC. In addition, C_3 , C_4 , C_5 , R3 and R4 provide further common-mode and differential mode filtering to reduce noise and unwanted signals.

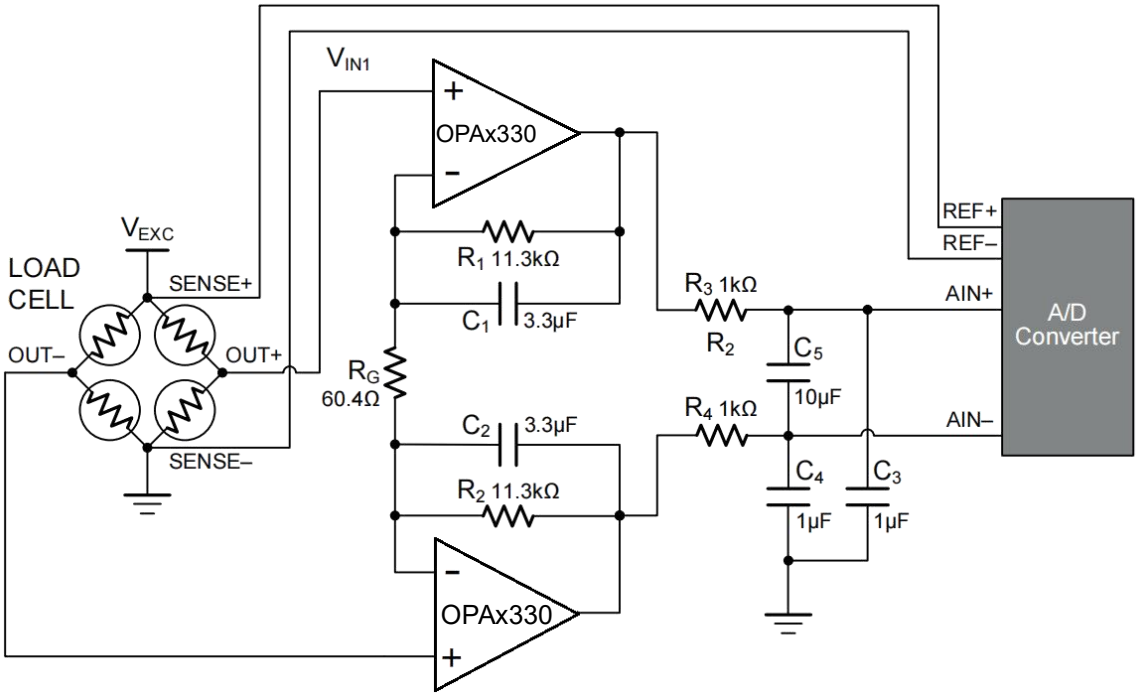

Figure 12. Precision Weigh Scale Measurement System

Physical Dimensions

SOP-8

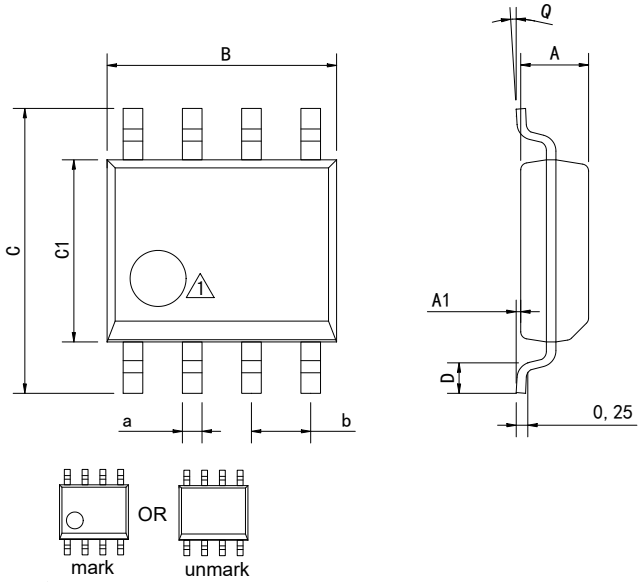

Dimensions In Millimeters(SOP-8)									
Symbol:	A	A1	B	C	C1	D	Q	a	b
Min:	1.35	0.05	4.90	5.80	3.80	0.40	0°	0.35	1.27 BSC
Max:	1.55	0.20	5.10	6.20	4.00	0.80	8°	0.45	

MSOP-8

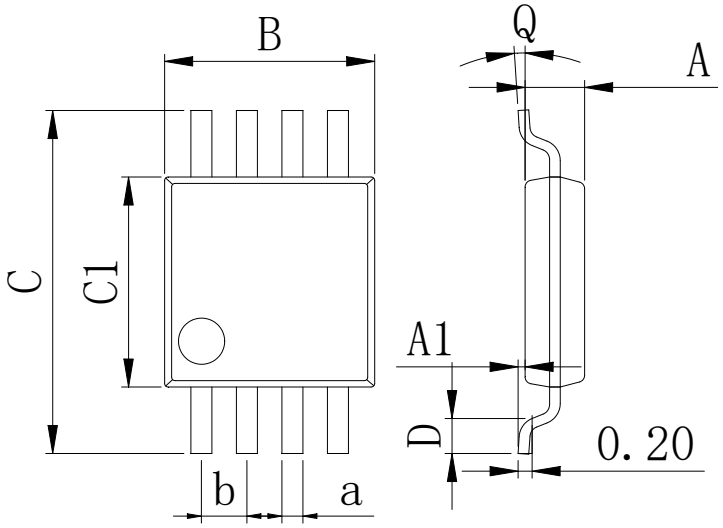

Dimensions In Millimeters(MSOP-8)									
Symbol:	**A**	**A1**	**B**	**C**	**C1**	**D**	**Q**	**a**	**b**
Min:	0.80	0.05	2.90	4.75	2.90	0.35	0°	0.25	0.65 BSC
Max:	0.90	0.20	3.10	5.05	3.10	0.75	8°	0.35	

Physical Dimensions

SOT-23-5

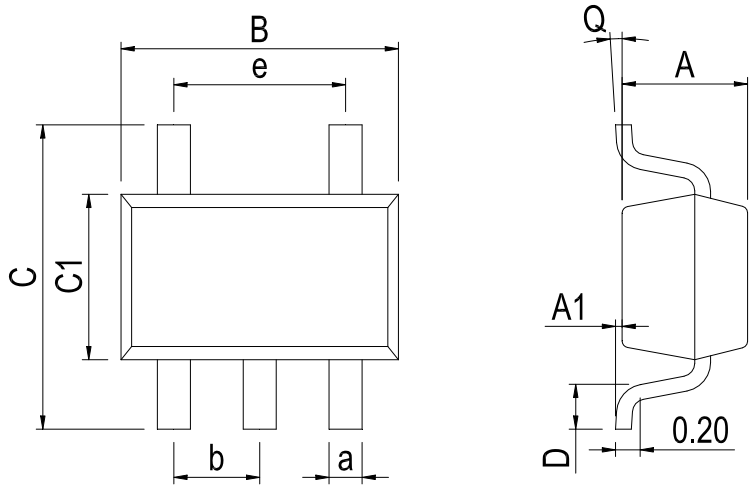

Dimensions In Millimeters(SOT-23-5)										
Symbol:	**A**	**A1**	**B**	**C**	**C1**	**D**	**Q**	**a**	**b**	**e**
Min:	1.00	0.00	2.82	2.65	1.50	0.30	0°	0.30	0.95 BSC	1.90 BSC
Max:	1.15	0.15	3.02	2.95	1.70	0.60	8°	0.50		

DFN-8 2*2

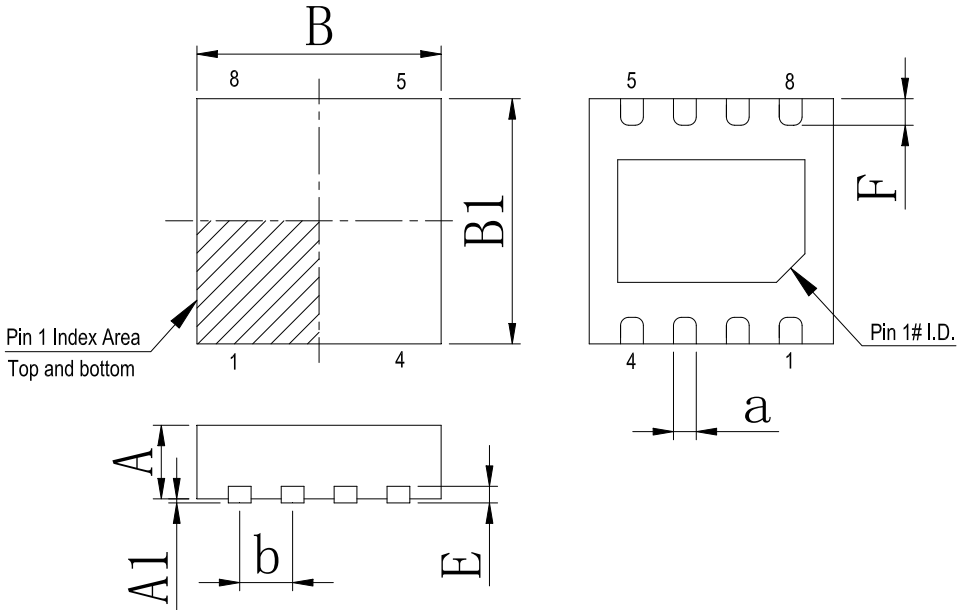

Dimensions In Millimeters(DFN-8 2*2)								
Symbol:	**A**	**A1**	**B**	**B1**	**E**	**F**	**a**	**b**
Min:	0.85	0	1.90	1.90	0.15	0.25	0.18	0.50TYP
Max:	0.95	0.05	2.10	2.10	0.25	0.45	0.30	

Physical Dimensions

SOP-14

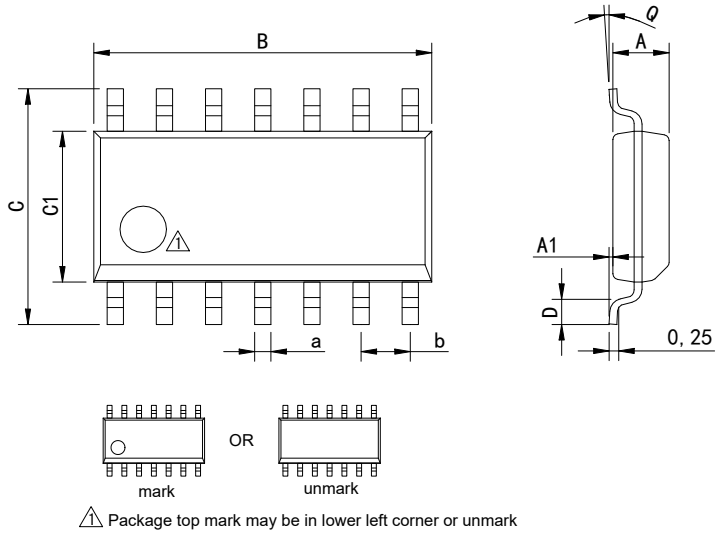

Dimensions In Millimeters(SOP-14)									
Symbol:	**A**	**A1**	**B**	**C**	**C1**	**D**	**Q**	**a**	**b**
Min:	1.35	0.05	8.55	5.80	3.80	0.40	0°	0.35	1.27 BSC
Max:	1.55	0.20	8.95	6.20	4.00	0.80	8°	0.45	

SC70-5

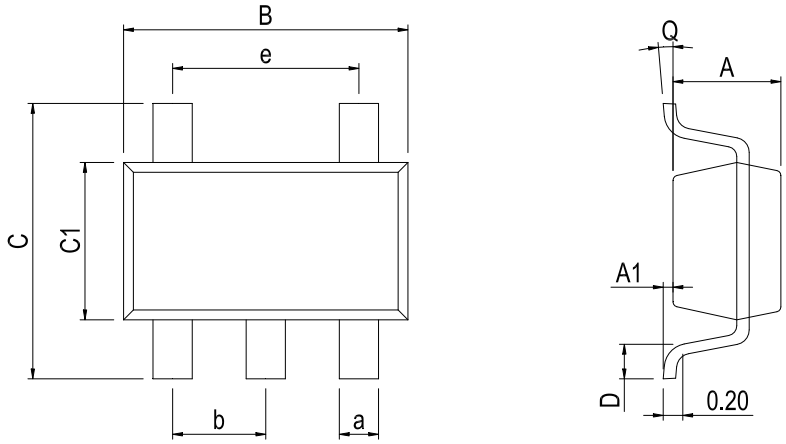

Dimensions In Millimeters(SC70-5)										
Symbol:	**A**	**A1**	**B**	**C**	**C1**	**D**	**Q**	**a**	**b**	**e**
Min:	0.90	0.00	2.00	2.15	1.15	0.26	0°	0.15	0.65 BSC	1.30 BSC
Max:	1.00	0.15	2.20	2.45	1.35	0.46	8°	0.35		

Revision History

REVISION NUMBER	DATE	REVISION	PAGE
V1.0	2017-7	New	1-24
V1.1	2025-10	Document Reformatting	1-24

IMPORTANT STATEMENT:

Huaguan Semiconductor reserves the right to change products and services offered without prior notice. Customers should obtain the latest relevant information before placing orders and verify that such information is current and complete. Huaguan Semiconductor assumes no responsibility or liability for altered documents.

Customers are responsible for complying with safety standards and implementing safety measures when using Huaguan Semiconductor products in system design and end-product manufacturing. You assume full responsibility for: selecting the appropriate Huaguan Semiconductor products for your application; designing, validating, and testing your application; and ensuring that your application complies with applicable standards and all other safety, security, or other requirements. This is to prevent potential risks that may lead to personal injury or property damage.

Huaguan Semiconductor products are not approved for use in life support, military, aerospace, or other high-risk applications. Huaguan products are neither intended nor warranted for use in such systems or equipment. Any failure or malfunction may lead to personal injury or severe property damage. Such applications are deemed "Unsafe Use." Unsafe Use includes, but is not limited to: surgical and medical equipment, nuclear energy control equipment, aircraft or spacecraft instruments, control or operation of vehicle power, braking, or safety systems, traffic signal instruments, all types of safety devices, and any other applications intended to support or sustain life. Huaguan Semiconductor shall not be liable for consequences resulting from Unsafe Use in these fields. Users must independently evaluate and assume all risks. Any issues, liabilities, or losses arising from the use of products beyond their approved applications shall be solely borne by the user. Users may not claim any compensation from Huaguan Semiconductor based on these terms. If any third party claims against Huaguan Semiconductor due to such Unsafe Use, the user shall compensate Huaguan Semiconductor for all resulting damages and liabilities.

Huaguan Semiconductor provides technical and reliability data (including datasheets), design resources (including reference designs), application or other design advice, web tools, safety information, and other resources for its semiconductor products. However, no guarantee is made that these resources are free from defects, and no express or implied warranties are provided. The use of testing and other quality control techniques is limited to Huaguan Semiconductor's quality assurance scope. Not all parameters of each device are tested.

Huaguan Semiconductor's documentation authorizes you to use these resources only for developing applications related to the products described herein. You are not granted rights to any other intellectual property of Huaguan Semiconductor or any third party. Any other reproduction or display of these resources is strictly prohibited. You shall fully indemnify Huaguan Semiconductor and its agents against any claims, damages, costs, losses, and liabilities arising from your use of these resources. Huaguan Semiconductor shall not be held responsible.