深圳市佑驰电子有限公司

Specification for Approval

产品名称： 电感

规格型号： HPLA-252010-XXX-M

产品编号：

日　　期： 2026-01-14

1、本承认书的内容更改需经过双方确认，任一方单独的修改均视为无效。

2、本承认书在送达客户后，请给予承认并即签回， 如无签 回下订单 的， 我司有权以此承认书标准生产， 并表示购买方默认许可。

核准	审核	制作
	Aaron	Ada

http://www.szyouchi.com　　邮箱：chengjian@yc-ele.com

CUSTOMER PART NO.	REV.	YC PART NO. HPLA-252010-XXX-M	ISSUE DATE JAN.14.2026
PART NAME. MOLDING INDUCTOR		YC REV. V1.0	USED ON.

1. 外观尺寸 **Dimensions and Recommend PC Board Pattern (unit: mm)** ：

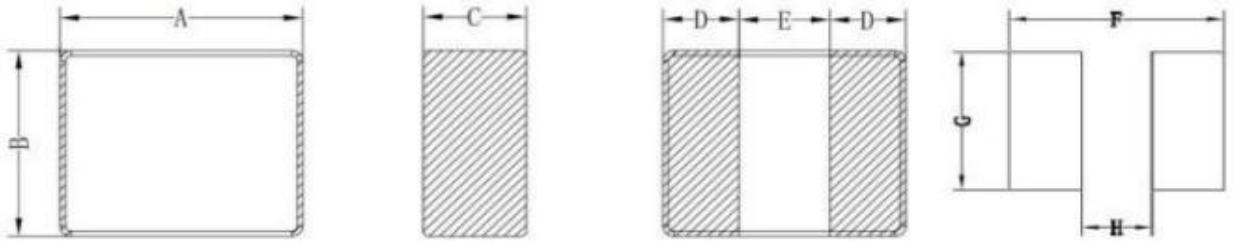

ITEM	A	B	C	D	E	F	G	H
SPEC	2.5±0.20	2.0±0.20	1.0 Max	0.7±0.30	1. 1±0.30	2.8 typ	2.3 typ	0.9 typ

Part No.	Inductance	DC Resistance		Saturation Current		Heat Rating Current	Withstanding Voltage
	1MHz/1V	Max.	Typ.	Max.	Typ.	Typ.	Typ.
Units	μH	mΩ		A		A	VDC
Symbol	L	DCR		Isat		Irms	/
HPLA-252010-R22-M	0.22±20%	18	12	8.0	8.5	7.0	20
HPLA-252010-R33-M	0.33±20%	23	18	7.3	7.6	6.8	20
HPLA-252010-R47-M	0.47±20%	29	23	5.5	6.0	5.5	20
HPLA-252010-R68-M	0.68±20%	40	32	5.0	5.5	4.8	20
HPLA-252010-1R0-M	1.00±20%	55	45	4.2	4.8	4.3	20
HPLA-252010-1R5-M	1.50±20%	75	60	3.2	3.7	3.7	20
HPLA-252010-2R2-M	2.20±20%	125	105	2.7	3.0	2.8	20
HPLA-252010-3R3-M	3.30±20%	155	135	2.3	2.8	2.3	20
HPLA-252010-4R7-M	4.70±20%	250	220	1.6	1.8	1.6	20
HPLA-252010-100-M	10.0±20%	500	453	1.1	1.5	1.2	20

Note：

(1) All test data is referenced to 25℃ ambient.

(2) When applying the heat rating current DC (Idc) to coil, it will cause an approximate △T of 40℃.

(3) When applying the saturation current DC (Isat) to coil, it will cause the initial inductance valuel to drop 30%Typical.

(4) Operating Temperature Range -40℃ to +125℃.

(5) Rated current:Isat (Max.) or Irms (Typ.), whichever is smaller.

(6) Saturation Current: Typ. Value, DC current at which the inductance drops approximately 30% from its value without current;

(7) Heat Rating Current: DC current that causes an approximate △T of40℃ from 20℃ ambient.

3. 品名规则 Part Numbering:

HPLA	252010	1R0	M
(1)	(2)	(3)	(4)

(1)Series:HPLA=Surface Mounting Power Chokes (Molded Inductor)

(2)Dimension:2520=2520 Series 10=Product Height 1.0mm

(3)Inductance:R47=0.47μH 4R7=4.7μH 100= 10μH

(4)Inductance Tolerance:J=±5% K=±10% L=±15% M=±20% N=±30%

4. 材料清单Material List

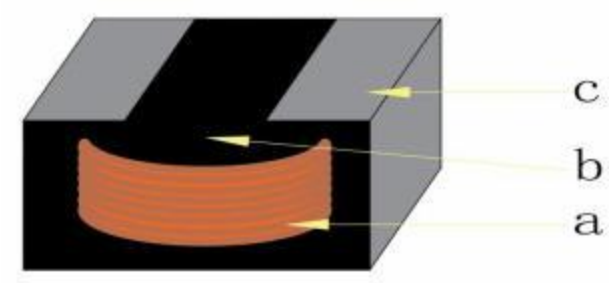

No.	项 目ITEM	材 料 Materials
a	线 Wire	铜 线 Copper wire
b	磁 芯Core	金 属合 金Metal alloy
c	金 属化 电 极Terminal	锡 Sn

CUSTOMER PART NO.	REV.	YC PART NO. HPLA-252010-XXX-M	ISSUE DATE JAN.14.2026
PART NAME. MOLDING INDUCTOR		YC REV. V1.0	USED ON.

5. 储存条件/注意的事项Storage conditions/Matters need attention

1、贮存温度、湿度条件：

Storage temperature and humidity conditions;

a、产品包装与载体：温度-10℃~+40℃，相对湿度低于60%

Product packing with carrier tape:-10℃~40℃ and less than 60% RH;

b、单独的产品：温度-20℃~+60℃，相对湿度低于60%

Product alone:-10℃~60℃ and less than 60% RH;

c、产品在6个月内使用(注意：产品一经拆开包装，须尽快使用)

Products should be used within 6 months.(Note that the product should be used as soon as possible once it is folded);

d、包装材料应保存在空气中不存在氯或硫的地方；

The packaging material should kept where no chlorine or sulfur exists in the air;

e、不要用手指触摸电极(焊接端子)， 因为这可能导致焊接能力的下降；

Do not touch the electrodes (soldering terminals) with fingers as this may lead to deterioration of solder ability;

f、个别零件强烈建议使用镊子或真空取料机 ，散装搬运应确保尽量减少磨损和机械冲击；

The use of tweezers or vacuum pick-ups is strongly recommended for individual components. Bulk handling should ensure that abrasion and mechanical shock are minimized;

CUSTOMER PART NO.	REV.	YC PART NO. HPLA-252010-XXX-M	ISSUE DATE JAN.14.2026
PART NAME. MOLDING INDUCTOR		YC REV. V1.0	USED ON.

6. 包装规范：Packaging Specifications

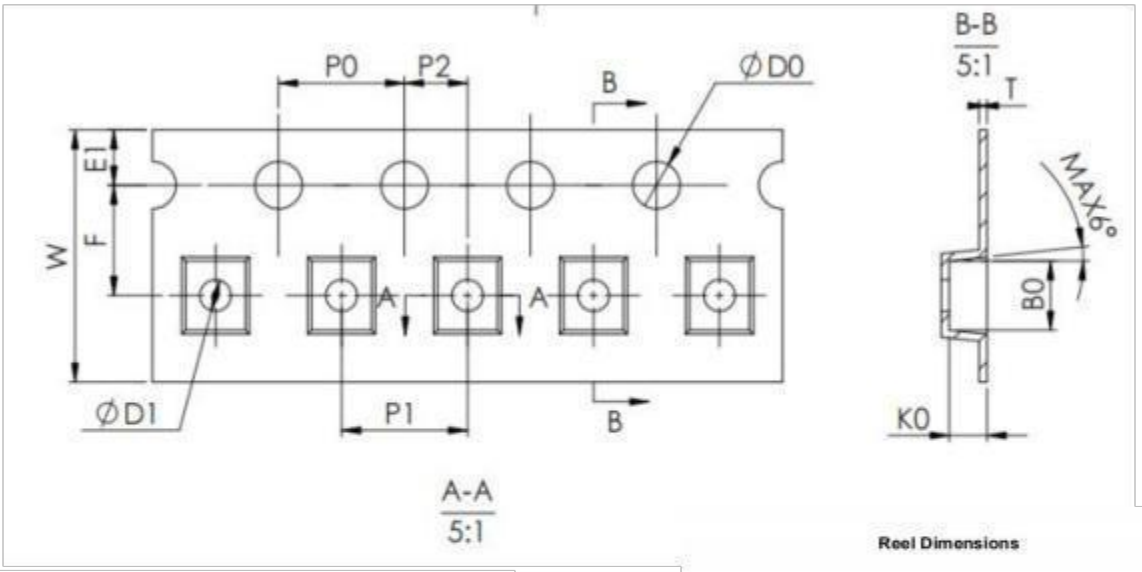

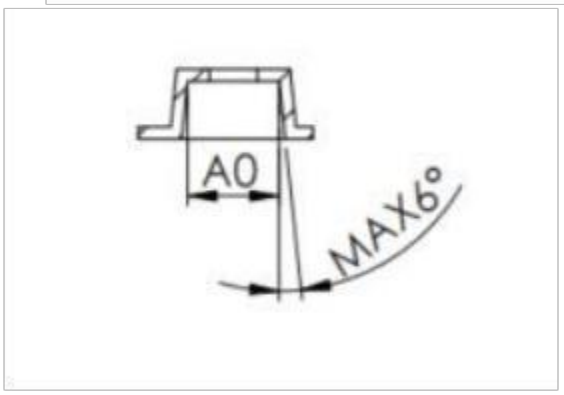

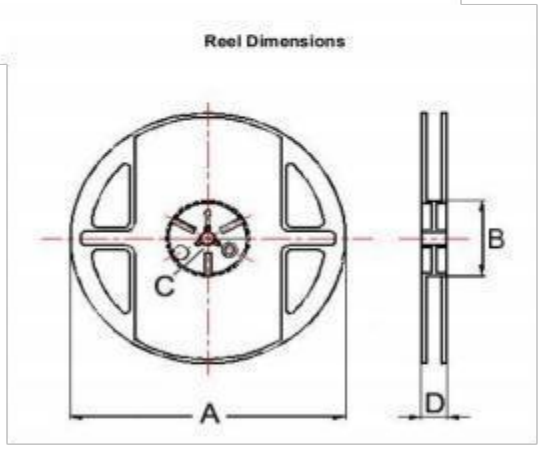

Tape Dimensions（mm）							Reel Dimensions（mm）				PCS/REEL
A0	B0	K0	T	W	P0	D0	A	B	C	D	
2.25±0.1	2.8±0.1	1.1±0.05	0.25±0.02	8±0.1	4±0.1	1.5±0.1	178	60	12	1.5	3000