NOVOSENSE

NSM2012

High-Accuracy, Hall-Effect-Based Current Sensor IC with Common-Mode Field Rejection in 3kV Isolation

Datasheet (EN) 1.2

Product Overview

NSM2012 is an integrated path current sensor with a very low on-resistance of 1.2mΩ, reducing heat loss on the chip.

NOVOSENSE innovative isolation technology and signal conditioning design can meet high isolation levels while sensing the current flowing through the internal Busbar. A differential Hall pair is used internally, so it has a strong immunity to external stray magnetic fields.

NSM2012 supports both a ratiometric output and a fixed output mode. The fixed mode enables customers to use ADC differential sampling of VREF and VOUT voltages to reduce external common-mode (such as temperature,etc). Compared with the current sampling method of the Shunt+ isolated op amp, NSM2012 eliminates the need for the primary side power supply and has a simple and convenient layout. At the same time, it has extremely high isolation withstand voltage and Lifetime stability.

In high-side current monitoring applications, NSM2012 can reach a working voltage of 600Vpk, and it can withstand 6kV surge voltage without adding any protection devices.

Due to NSM2012 internal accurate temperature compensation algorithm and factory accuracy calibration, this current sensor can maintain good accuracy in the full temperature working range, and the customer does not need to do secondary programming or calibration.

Support 3.3V/5V power supply (different version)

Key Features

- High bandwidth and fast response time
- 400kHz bandwidth
- 1.5us response time
- High-precision current measurement
- Differential Hall sets can immune stray field
- High isolation level that meets UL standards
- Withstand isolation voltage (VISO): 3000Vrms
- Maximum surge isolation withstand voltage (VIOSM): 6kV
- CMTI > 100V/ns
- CTI（I）
- Creepage distance/Clearance distance: 4mm
- NOVOSENSE innovative 'Spin Current' technology makes offset temperature drift very small
- Ratiometric output or fixed output
- Working temperature: -40°C ~ 125°C
- Primary internal resistance: 1.2mΩ
- SOIC8 package
- UL62368/EN62368 safety certification
- ROHS compliance

Certificate Number:
CBS 112807 0002 Rev.00
B 112807 0001 Rev.00

Applications

- Solar System
- Industrial Power Supply
- Motor Control
- OBC/DCDC/PTC Heater
- Charging Pile

Certificate Number: E520654

Device Information

Part Number	Package	Body Size
NSM2012	SOIC8	4.9mm × 3.9mm

Functional Block Diagrams

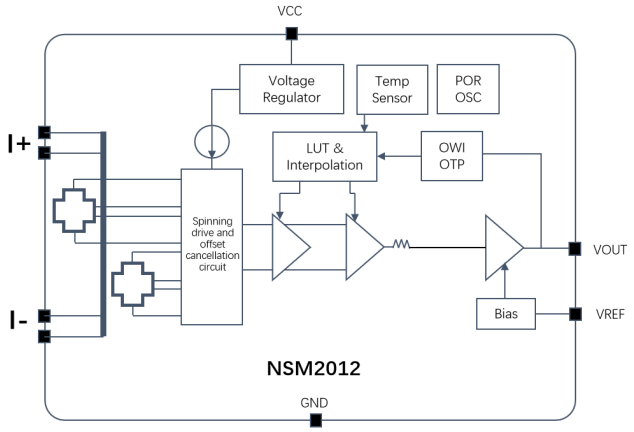

Figure 1. NSM2012 Block Diagram

Copyright © 2025, NOVOSENSE

INDEX

1. PIN CONFIGURATION AND FUNCTIONS 4
2. ABSOLUTE MAXIMUM RATINGS 5
3. ESD RATINGS 5
4. ISOLATION CHARACTERISTICS 5
5. SPECIFICATIONS 6
5.1. COMMON CHARACTERISTICS (TA= -40°C TO 125°C, VCC = 5VOR3.3V, UNLESS OTHERWISE SPECIFIED) 6
5.2. NSM2012-02B3R-DSPR CHARACTERISTICS (TA= -40°C TO 125°C, VCC = 3.3V, UNLESS OTHERWISE SPECIFIED) 7
5.3. NSM2012-02B5R-DSPR CHARACTERISTICS (TA= -40°C TO 125°C, VCC = 5V, UNLESS OTHERWISE SPECIFIED) 8
5.4. NSM2012-05B3F-DSPR CHARACTERISTICS (TA= -40°C TO 125°C, VCC = 3.3V, UNLESS OTHERWISE SPECIFIED) 9
5.5. NSM2012-05B5R-DSPR CHARACTERISTICS (TA= -40°C TO 125°C, VCC = 5V, UNLESS OTHERWISE SPECIFIED) 10
5.6. NSM2012-10B3R-DSPR CHARACTERISTICS (TA= -40°C TO 125°C, VCC = 3.3V, UNLESS OTHERWISE SPECIFIED) 11
5.7. NSM2012-10B5F-DSPR CHARACTERISTICS (TA= -40°C TO 125°C, VCC = 5V, UNLESS OTHERWISE SPECIFIED) 12
5.8. NSM2012-10B5R-DSPR CHARACTERISTICS (TA= -40°C TO 125°C, VCC = 5V, UNLESS OTHERWISE SPECIFIED) 13
5.9. NSM2012-10U3R-DSPR CHARACTERISTICS (TA= -40°C TO 125°C, VCC = 3.3V, UNLESS OTHERWISE SPECIFIED) 14
5.10. NSM2012-10U5R-DSPR CHARACTERISTICS (TA= -40°C TO 125°C, VCC = 5V, UNLESS OTHERWISE SPECIFIED) 15
5.11. NSM2012-20B3F-DSPR CHARACTERISTICS (TA= -40°C TO 125°C, VCC = 3.3V, UNLESS OTHERWISE SPECIFIED) 16
5.12. NSM2012-20B3R-DSPR CHARACTERISTICS (TA= -40°C TO 125°C, VCC = 3.3V, UNLESS OTHERWISE SPECIFIED) 17
5.13. NSM2012-20B5F-DSPR CHARACTERISTICS (TA= -40°C TO 125°C, VCC = 5V, UNLESS OTHERWISE SPECIFIED) 18
5.14. NSM2012-20B5R-DSPR CHARACTERISTICS (TA= -40°C TO 125°C, VCC = 5V, UNLESS OTHERWISE SPECIFIED) 19
5.15. NSM2012-25B5F-DSPR CHARACTERISTICS (TA= -40°C TO 125°C, VCC = 5V, UNLESS OTHERWISE SPECIFIED) 20
5.16. NSM2012-25B5R-DSPR CHARACTERISTICS (TA= -40°C TO 125°C, VCC = 5V, UNLESS OTHERWISE SPECIFIED) 21
5.17. NSM2012-30B3R-DSPR CHARACTERISTICS (TA= -40°C TO 125°C, VCC = 3.3V, UNLESS OTHERWISE SPECIFIED) 22
5.18. NSM2012-30B5F-DSPR CHARACTERISTICS (TA= -40°C TO 125°C, VCC = 5V, UNLESS OTHERWISE SPECIFIED) 23
5.19. NSM2012-30B5R-DSPR CHARACTERISTICS (TA= -40°C TO 125°C, VCC = 5V, UNLESS OTHERWISE SPECIFIED) 24
5.20. NSM2012-30U5R-DSPR CHARACTERISTICS (TA= -40°C TO 125°C, VCC = 5V, UNLESS OTHERWISE SPECIFIED) 25
5.21. NSM2012-40B3R-DSPR CHARACTERISTICS (TA= -40°C TO 125°C, VCC = 3.3V, UNLESS OTHERWISE SPECIFIED) 26
5.22. NSM2012-40B5R-DSPR CHARACTERISTICS (TA= -40°C TO 125°C, VCC = 5V, UNLESS OTHERWISE SPECIFIED) 27
5.23. NSM2012-50B3R-DSPR CHARACTERISTICS (TA= -40°C TO 125°C, VCC = 3.3V, UNLESS OTHERWISE SPECIFIED) 28

Copyright © 2025, NOVOSENSE

5.24. NSM2012-50B5F-DSPR CHARACTERISTICS (TA= -40°C TO 125°C, VCC = 5V, UNLESS OTHERWISE SPECIFIED) 29
5.25. NSM2012-50B5R-DSPR CHARACTERISTICS (TA= -40°C TO 125°C, VCC = 5V, UNLESS OTHERWISE SPECIFIED) 30
5.26. NSM2012-50U5F-DSPR CHARACTERISTICS (TA= -40°C TO 125°C, VCC = 5V, UNLESS OTHERWISE SPECIFIED) 31
5.27. NSM2012-65B5R-DSPR CHARACTERISTICS (TA= -40°C TO 125°C, VCC = 5V, UNLESS OTHERWISE SPECIFIED) 32
5.28. TYPICAL PERFORMANCE CHARACTERISTICS 33
NSM2012-30B3R-DSPR[1] 33
NSM2012-30B5R-DSPR[1] 34
NSM2012-10U5R-DSPR[1] 35
NSM2012-20B5R-DSPR[1] 36

6. FUNCTION DESCRIPTION 38

6.1. OVERVIEW 38
6.2. NSM2012 R VERSION (SINGLE-ENDED RATIOMETRIC OUTPUT) 38
6.3. NSM2012 F VERSION (FIXED OUTPUT) 38
6.4. DEFINITION OF NSM2012 TERMS 39

7. APPLICATION NOTE 41

7.1. TYPICAL APPLICATION CIRCUIT 41
7.2. PCB LAYOUT 41
7.3. THERMAL EVALUATION 42

8. PACKAGE INFORMATION 44

9. ORDER INFORMATION 45

10. TAPE AND REEL INFORMATION 47

11. REVISION HISTORY 49

Copyright © 2025, NOVOSENSE

1. Pin Configuration and Functions

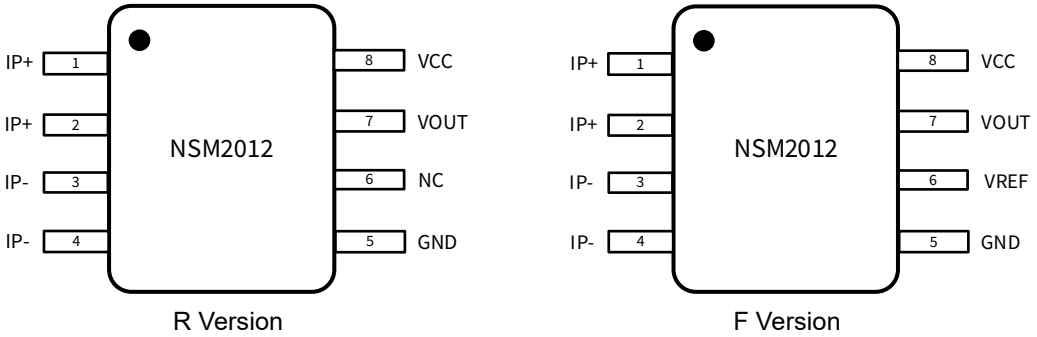

Figure 1.1 NSM2012 Package

Table 1.1 NSM2012 Pin Configuration and Description

NSM2012 PIN NO.	***Symbol***	***Function***
1-2	IP+	Current flows into the chip, positive direction
3-4	IP-	Current flows out of the chip, negative direction
5	GND	Ground
6	VREF/NC	For ’F’ version, this Pin is VREF; For ‘R’ version, internal circuit connection, this Pin can also connect to GND
7	VOUT	Output voltage
8	VCC	Power supply

Copyright © 2025, NOVOSENSE

2. Absolute Maximum Ratings

Parameters	Symbol	Min	Typ	Max	Unit	Comments
V_{CC}	V_{CC}	-0.3		6.5	V	25°C
Vout/Vref		-0.3		V_{CC}+0.3	V	25°C
Others Pin		-0.3		V_{CC}+0.3	V	25°C
Storage temperature	$T_{Storage}$	-40		150	°C	
Ambient temperature	$T_{operation}$	-40		125	°C	
Junction temperature	T_j	-40		150	°C	

3. ESD Ratings

	Ratings	Value	Unit
Electrostatic discharge	Human body model (HBM), per AEC-Q100-002-RevD ● All pins	±8	kV
	Charged device model (CDM), per AEC-Q100-011-RevB ● All pins	±2	kV

4. Isolation Characteristics

Parameters	Symbol	Rating	Unit	Comments
Dielectric Surge Voltage	V_{surge}	6	kV	Based on IEC61000-4-5 1.2μs/50μs waveform
Dielectric Strength Test Voltage	V_{ISO}	3000	Vrms	60s isolation voltage parameters, according to UL62368-1, 3.6kV/ 1s insulation performance will be tested before delivery, and partial discharge is verified to be less than 5pC
Working Voltage for Basic Isolation	V_{WVBI}	424	Vrms	Maximum approved working voltage for basic isolation according to UL60950-1 and UL62368-1
		600	Vdc	
Common-mode transient immunity	CMTI	>100	V/ns	The criterion for judging the failure is that the output peak is greater than 100mV and the duration is longer than 1us
Creepage	Creepage	4	mm	Minimum Creepage
Clearance	Clearance	4	mm	Minimum Clearance
Comparative Tracking Index	CTI	>=600		CTI I

Copyright © 2025, NOVOSENSE

5. Specifications

5.1. Common Characteristics (TA= -40°C to 125°C, VCC = 5Vor3.3V, unless otherwise specified)

Parameters	Symbol	Min	Typ	Max	Unit	Comments
Supply voltage	V_{CC}	3	3.3	3.6	V	3.3V version
		4.5	5	5.5	V	5V version
Supply current	I_{CC}		12	15	mA	No load,Vcc=5V
			7.5	8	mA	No load,Vcc=3.3V
Primary conductor resistance	R_P		1.2		mΩ	T_A = 25°C
Power-on time	T_{po}		1		ms	It is recommended that customers read data after Vcc reaches Vccmin 1ms, and internal register loading 1ms after POR
Output capacitance load[1][2]	C_L			10	nF	
Output resistance load[1][2]	R_L	10			kΩ	
Output short current	I_{short}		25		mA	Short to Vcc and short to GND, T_A = 25°C
Rail to Rail output voltage[1][2]	V_s	0.1		VCC-0.1	V	T_A = 25°C, C_L=1nF, R_L=10K to Vcc or GND
Common mode field rejection[1][2]	CMFR		>40		dB	
Power supply rejection ratio	PSRR		-50		dB	Only for 'F' version, DC to 1 kHz, 100 mV pk-pk ripple around Vcc=5V, IP=0A
Rise time	T_r		0.9		us	Vout=2.2V, TA = 25°C, CL=1nF, Vcc=3.3V, 30AB, R version
Propagation dealy	T_{pd}		0.9		us	Vout=2.2V, TA = 25°C, CL=1nF, Vcc=3.3V, 30AB, R version
Response time	$T_{response}$		1.5		us	Vout=3V, TA = 25°C, CL=1nF, Vcc=3.3V, 30AB, R version
Bandwidth[1][2]	BW		400		kHz	-3dB bandwidth, TA = 25°C, CL=1nF, Vcc=3.3V, 30AB, R version
Noise density[1][2]	ND		120		uArms/√Hz	TA = 25°C, CL=1nF, Vcc= 5V
			140		uArms/√Hz	TA = 25°C, CL=1nF, Vcc= 3.3V
Non-linearity	E_{NL}		±0.2		%	

Copyright © 2025, NOVOSENSE

Parameters	Symbol	Min	Typ	Max	Unit	Comments
Reference voltage	V_{ref}	2.49	2.5	2.51	V	'FB' version, Vcc=5V
		1.64	1.65	1.66	V	'FB' version, Vcc=3.3V
		0.49	0.5	0.51	V	'FU' version, Vcc=5V
		0.32	0.33	0.34	V	'FU' version, Vcc=3.3V
Ratiometric output sensitivity error	S_{ERR}		0.75		%	'R' version, Vcc= 4.85V~5.15V, TA = 25°C
Rationmetric output offset error	V_{OUT0R}		0.1		%	'R' version, Vcc= 4.85V~5.15V, TA = 25°C
Ratiometric output zero current output voltage	QVO		$V_{CC}/2$			'RB' version, Vcc=5V/3.3V
			$0.1*V_{CC}$			'RU' version, Vcc=5V/3.3V

[1]: Guaranteed by design.

[2]: Guaranteed by Bench Validation

[3]: The increase or decrease of data in charpter 5.X will not send a PCN to the customer if the evaluation does not affect the customer's use.

5.2. NSM2012-02B3R-DSPR Characteristics (TA= -40°C to 125°C, VCC = 3.3V, unless otherwise specified)

Parameters	Symbol	Min	Typ	Max	Unit	Comments
Current sensing range	I_{pr}	-2		2	A	
Sensitivity	Sens		660		mV/A	$I_{prmin}<I_{pr}<I_{prmax}$
Zero current output voltage	V_{QVO}		$V_{CC}/2$		V	I_{pr}=0A
Sensitivity error[1][2]	E_{sens}	-2		2	%	TA = 25°C~125°C
			±3.5		%	TA = -40°C~25°C
Offset error[2]	V_{OE}	-10		10	mV	TA = 25°C~125°C, Ipr=0A
			±10		mV	TA = -40°C~25°C, Ipr=0A
Total output error[1][2]	E_{total}	-2		2	%	TA = 25°C~125°C
			±3.5		%	TA = -40°C~25°C
Sensitivity error lifetime drift[3]	E_{sens_drift}	-2.3		2.3	%	After reliability test, TA = 25°C
Offset error lifetime drift[3]	V_{OE_drift}	-12		12	mV	After reliability test, TA = 25°C
Total output error lifetime drift [3]	E_{total_drift}	-2.8		2.8	%	After reliability test, TA = 25°C

[1]: In production, total error and sensitivity error are measured and calculated at 2A, A single part will not have both the maximum/minimum sensitivity error and maximum/minimum offset voltage.

[2]: When TA = 25°C~125°C, Min/Max value is the mean value +/-3sigma; When TA = -40°C~25°C, Typical value is the mean value +/-3sigma.according to the statistical law, 99.73% of the data is in this range Inside.

[3]: The reliability data is implemented in accordance with the AEC-Q100 standard. This item is derived from the experimental results with the largest change after the PC, HTS, HAST, UHAST, HTOL, TC and other test data required by AEC-Q100 Grade1 as a reference , this is the worst case.

Copyright © 2025, NOVOSENSE

5.3. NSM2012-02B5R-DSPR Characteristics (TA= -40°C to 125°C, VCC = 5V, unless otherwise specified)

Parameters	Symbol	Min	Typ	Max	Unit	Comments
Current sensing range	I_{pr}	-2		2	A	
Sensitivity	Sens		1000		mV/A	$I_{prmin}<I_{pr}<I_{prmax}$
Zero current output voltage	V_{QVO}		$V_{CC}/2$		V	I_{pr}=0A
Sensitivity error[1][2]	E_{sens}	-2		2	%	TA = 25°C~125°C
			±3.5		%	TA = -40°C~25°C
Offset error[2]	V_{OE}	-10		10	mV	TA = 25°C~125°C, Ipr=0A
			±10		mV	TA = -40°C~25°C, Ipr=0A
Total output error[1][2]	E_{total}	-2		2	%	TA = 25°C~125°C
			±3.5		%	TA = -40°C~25°C
Sensitivity error lifetime drift[3]	E_{sens_drift}	-2.3		2.3	%	After reliability test, TA = 25°C
Offset error lifetime drift[3]	V_{OE_drift}	-12		12	mV	After reliability test, TA = 25°C
Total output error lifetime drift [3]	E_{total_drift}	-2.8		2.8	%	After reliability test, TA = 25°C

[1]: In production, total error and sensitivity error are measured and calculated at 2A, A single part will not have both the maximum/minimum sensitivity error and maximum/minimum offset voltage.

[2]: When TA = 25°C~125°C, Min/Max value is the mean value +/-3sigma; When TA = -40°C~25°C, Typical value is the mean value +/-3sigma.according to the statistical law, 99.73% of the data is in this range Inside.

[3]: The reliability data is implemented in accordance with the AEC-Q100 standard. This item is derived from the experimental results with the largest change after the PC, HTS, HAST, UHAST, HTOL, TC and other test data required by AEC-Q100 Grade1 as a reference , this is the worst case.

Copyright © 2025, NOVOSENSE

5.4. NSM2012-05B3F-DSPR Characteristics (TA= -40°C to 125°C, VCC = 3.3V, unless otherwise specified)

Parameters	Symbol	Min	Typ	Max	Unit	Comments
Current sensing range	I_{pr}	-5		5	A	
Sensitivity	Sens		264		mV/A	$I_{prmin}<I_{pr}<I_{prmax}$
Reference voltage	V_{REF}		1.65		V	I_{pr}=0A
Sensitivity error[1][2]	E_{sens}	-2		2	%	TA = 25°C~125°C
			±3.5		%	TA = -40°C~25°C
Offset error[2]	V_{OE}	-10		10	mV	TA = 25°C~125°C, I_{pr}=0A
			±10		mV	TA = -40°C~25°C, I_{pr}=0A
Reference error[2]	V_{RE}	-10		10	mV	TA = 25°C~125°C, I_{pr}=0A, Vref-1.65V
			±10		mV	TA = -40°C~25°C, I_{pr}=0A, Vref-1.65V
Total output error [1]	E_{total}	-2		2	%	TA = 25°C~125°C
			±3.5		%	TA = -40°C~25°C
Sensitivity error lifetime drift[3]	E_{sens_drift}	-2.3		2.3	%	After reliability test, TA = 25°C
Offset error lifetime drift[3]	V_{OE_drift}	-12		12	mV	After reliability test, TA = 25°C
Total output error lifetime drift [3]	E_{total_drift}	-2.8		2.8	%	After reliability test, TA = 25°C

[1]: In production, total error and sensitivity error are measured and calculated at 5A, A single part will not have both the maximum/minimum sensitivity error and maximum/minimum offset voltage.

[2]: When TA = 25°C~125°C, Min/Max value is the mean value +/-3sigma; When TA = -40°C~25°C, Typical value is the mean value +/-3sigma.according to the statistical law, 99.73% of the data is in this range Inside.

[3]: The reliability data is implemented in accordance with the AEC-Q100 standard. This item is derived from the experimental results with the largest change after the PC, HTS, HAST, UHAST, HTOL, TC and other test data required by AEC-Q100 Grade1 as a reference, this is the worst case.

Copyright © 2025, NOVOSENSE

5.5. NSM2012-05B5R-DSPR Characteristics (TA= -40°C to 125°C, VCC = 5V, unless otherwise specified)

Parameters	Symbol	Min	Typ	Max	Unit	Comments
Current sensing range	I_{pr}	-5		5	A	
Sensitivity	Sens		400		mV/A	$I_{prmin}<I_{pr}<I_{prmax}$
Zero current output voltage	V_{QVO}		$V_{CC}/2$		V	I_{pr}=0A
Sensitivity error[1][2]	E_{sens}	-2		2	%	TA = 25°C~125°C
			±3.5		%	TA = -40°C~25°C
Offset error[2]	V_{OE}	-10		10	mV	TA = 25°C~125°C, Ipr=0A
			±10		mV	TA = -40°C~25°C, Ipr=0A
Total output error[1][2]	E_{total}	-2		2	%	TA = 25°C~125°C
			±3.5		%	TA = -40°C~25°C
Sensitivity error lifetime drift[3]	E_{sens_drift}	-2.3		2.3	%	After reliability test, TA = 25°C
Offset error lifetime drift[3]	V_{OE_drift}	-12		12	mV	After reliability test, TA = 25°C
Total output error lifetime drift [3]	E_{total_drift}	-2.8		2.8	%	After reliability test, TA = 25°C

[1]: In production, total error and sensitivity error are measured and calculated at 5A, A single part will not have both the maximum/minimum sensitivity error and maximum/minimum offset voltage.

[2]: When TA = 25°C~125°C, Min/Max value is the mean value +/-3sigma; When TA = -40°C~25°C, Typical value is the mean value +/-3sigma.according to the statistical law, 99.73% of the data is in this range Inside.

[3]: The reliability data is implemented in accordance with the AEC-Q100 standard. This item is derived from the experimental results with the largest change after the PC, HTS, HAST, UHAST, HTOL, TC and other test data required by AEC-Q100 Grade1 as a reference , this is the worst case.

Copyright © 2025, NOVOSENSE

5.6. NSM2012-10B3R-DSPR Characteristics (TA= -40°C to 125°C, VCC = 3.3V, unless otherwise specified)

Parameters	Symbol	Min	Typ	Max	Unit	Comments
Current sensing range	I_{pr}	-10		10	A	
Sensitivity	Sens		132		mV/A	$I_{prmin}<I_{pr}<I_{prmax}$
Zero current output voltage	V_{QVO}		$V_{CC}/2$		V	I_{pr}=0A
Sensitivity error[1][2]	E_{sens}	-2		2	%	TA = 25°C~125°C
			±3.5		%	TA = -40°C~25°C
Offset error[2]	V_{OE}	-10		10	mV	TA = 25°C~125°C, Ipr=0A
			±10		mV	TA = -40°C~25°C, Ipr=0A
Total output error[1][2]	E_{total}	-2		2	%	TA = 25°C~125°C
			±3.5		%	TA = -40°C~25°C
Sensitivity error lifetime drift[3]	E_{sens_drift}	-2.3		2.3	%	After reliability test, TA = 25°C
Offset error lifetime drift[3]	V_{OE_drift}	-12		12	mV	After reliability test, TA = 25°C
Total output error lifetime drift [3]	E_{total_drift}	-2.8		2.8	%	After reliability test, TA = 25°C

[1]: In production, total error and sensitivity error are measured and calculated at 10A, A single part will not have both the maximum/minimum sensitivity error and maximum/minimum offset voltage.

[2]: When TA = 25°C~125°C, Min/Max value is the mean value +/-3sigma; When TA = -40°C~25°C, Typical value is the mean value +/-3sigma.according to the statistical law, 99.73% of the data is in this range Inside.

[3]: The reliability data is implemented in accordance with the AEC-Q100 standard. This item is derived from the experimental results with the largest change after the PC, HTS, HAST, UHAST, HTOL, TC and other test data required by AEC-Q100 Grade1 as a reference , this is the worst case.

Copyright © 2025, NOVOSENSE

5.7. NSM2012-10B5F-DSPR Characteristics (TA= -40°C to 125°C, VCC = 5V, unless otherwise specified)

Parameters	Symbol	Min	Typ	Max	Unit	Comments
Current sensing range	I_{pr}	-10		10	A	
Sensitivity	Sens		200		mV/A	$I_{prmin}<I_{pr}<I_{prmax}$
Reference voltage	V_{REF}		2.5		V	I_{pr}=0A
Sensitivity error[1][2]	E_{sens}	-2		2	%	TA = 25°C~125°C
			±3.5		%	TA = -40°C~25°C
Offset error[2]	V_{OE}	-10		10	mV	TA = 25°C~125°C, I_{pr}=0A
			±10		mV	TA = -40°C~25°C, I_{pr}=0A
Reference error[2]	V_{RE}	-10		10	mV	TA = 25°C~125°C, I_{pr}=0A, Vref-2.5V
			±10		mV	TA = -40°C~25°C, I_{pr}=0A, Vref-2.5V
Total output error [1]	E_{total}	-2		2	%	TA = 25°C~125°C
			±3.5		%	TA = -40°C~25°C
Sensitivity error lifetime drift[3]	E_{sens_drift}	-2.3		2.3	%	After reliability test, TA = 25°C
Offset error lifetime drift[3]	V_{OE_drift}	-12		12	mV	After reliability test, TA = 25°C
Total output error lifetime drift [3]	E_{total_drift}	-2.8		2.8	%	After reliability test, TA = 25°C

[1]: In production, total error and sensitivity error are measured and calculated at 10A, A single part will not have both the maximum/minimum sensitivity error and maximum/minimum offset voltage.

[2]: When TA = 25°C~125°C, Min/Max value is the mean value +/-3sigma; When TA = -40°C~25°C, Typical value is the mean value +/-3sigma.according to the statistical law, 99.73% of the data is in this range Inside.

[3]: The reliability data is implemented in accordance with the AEC-Q100 standard. This item is derived from the experimental results with the largest change after the PC, HTS, HAST, UHAST, HTOL, TC and other test data required by AEC-Q100 Grade1 as a reference, this is the worst case.

Copyright © 2025, NOVOSENSE

5.8. NSM2012-10B5R-DSPR Characteristics (TA= -40°C to 125°C, VCC = 5V, unless otherwise specified)

Parameters	Symbol	Min	Typ	Max	Unit	Comments
Current sensing range	I_{pr}	-10		10	A	
Sensitivity	Sens		200		mV/A	$I_{prmin}<I_{pr}<I_{prmax}$
Zero current output voltage	V_{QVO}		$V_{CC}/2$		V	I_{pr}=0A
Sensitivity error[1][2]	E_{sens}	-2		2	%	TA = 25°C~125°C
			±3.5		%	TA = -40°C~25°C
Offset error[2]	V_{OE}	-10		10	mV	TA = 25°C~125°C, Ipr=0A
			±10		mV	TA = -40°C~25°C, Ipr=0A
Total output error[1][2]	E_{total}	-2		2	%	TA = 25°C~125°C
			±3.5		%	TA = -40°C~25°C
Sensitivity error lifetime drift[3]	E_{sens_drift}	-2.3		2.3	%	After reliability test, TA = 25°C
Offset error lifetime drift[3]	V_{OE_drift}	-12		12	mV	After reliability test, TA = 25°C
Total output error lifetime drift [3]	E_{total_drift}	-2.8		2.8	%	After reliability test, TA = 25°C

[1]: In production, total error and sensitivity error are measured and calculated at 10A, A single part will not have both the maximum/minimum sensitivity error and maximum/minimum offset voltage.

[2]: When TA = 25°C~125°C, Min/Max value is the mean value +/-3sigma; When TA = -40°C~25°C, Typical value is the mean value +/-3sigma.according to the statistical law, 99.73% of the data is in this range Inside.

[3]: The reliability data is implemented in accordance with the AEC-Q100 standard. This item is derived from the experimental results with the largest change after the PC, HTS, HAST, UHAST, HTOL, TC and other test data required by AEC-Q100 Grade1 as a reference , this is the worst case.

Copyright © 2025, NOVOSENSE

5.9. NSM2012-10U3R-DSPR Characteristics (TA= -40°C to 125°C, VCC = 3.3V, unless otherwise specified)

Parameters	Symbol	Min	Typ	Max	Unit	Comments
Current sensing range	I_{pr}	0		10	A	
Sensitivity	Sens		264		mV/A	$I_{prmin}<I_{pr}<I_{prmax}$
Zero current output voltage	V_{QVO}		$0.1*V_{CC}$		V	I_{pr}=0A
Sensitivity error[1][2]	E_{sens}	-2		2	%	TA = 25°C~125°C
			±3.5		%	TA = -40°C~25°C
Offset error[2]	V_{OE}	-10		10	mV	TA = 25°C~125°C, Ipr=0A
			±10		mV	TA = -40°C~25°C, Ipr=0A
Total output error[1][2]	E_{total}	-2		2	%	TA = 25°C~125°C
			±3.5		%	TA = -40°C~25°C
Sensitivity error lifetime drift[3]	E_{sens_drift}	-2.3		2.3	%	After reliability test, TA = 25°C
Offset error lifetime drift[3]	V_{OE_drift}	-12		12	mV	After reliability test, TA = 25°C
Total output error lifetime drift [3]	E_{total_drift}	-2.8		2.8	%	After reliability test, TA = 25°C

[1]: In production, total error and sensitivity error are measured and calculated at 10A, A single part will not have both the maximum/minimum sensitivity error and maximum/minimum offset voltage.

[2]: When TA = 25°C~125°C, Min/Max value is the mean value +/-3sigma; When TA = -40°C~25°C, Typical value is the mean value +/-3sigma.according to the statistical law, 99.73% of the data is in this range Inside.

[3]: The reliability data is implemented in accordance with the AEC-Q100 standard. This item is derived from the experimental results with the largest change after the PC, HTS, HAST, UHAST, HTOL, TC and other test data required by AEC-Q100 Grade1 as a reference , this is the worst case.

Copyright © 2025, NOVOSENSE

5.10. NSM2012-10U5R-DSPR Characteristics (TA= -40°C to 125°C, VCC = 5V, unless otherwise specified)

Parameters	Symbol	Min	Typ	Max	Unit	Comments
Current sensing range	I_{pr}	0		10	A	
Sensitivity	Sens		400		mV/A	$I_{prmin}<I_{pr}<I_{prmax}$
Zero current output voltage	V_{QVO}		$0.1*V_{CC}$		V	I_{pr}=0A
Sensitivity error[1][2]	E_{sens}	-2		2	%	TA = 25°C~125°C
			±3.5		%	TA = -40°C~25°C
Offset error[2]	V_{OE}	-10		10	mV	TA = 25°C~125°C, Ipr=0A
			±10		mV	TA = -40°C~25°C, Ipr=0A
Total output error[1][2]	E_{total}	-2		2	%	TA = 25°C~125°C
			±3.5		%	TA = -40°C~25°C
Sensitivity error lifetime drift[3]	E_{sens_drift}	-2.3		2.3	%	After reliability test, TA = 25°C
Offset error lifetime drift[3]	V_{OE_drift}	-12		12	mV	After reliability test, TA = 25°C
Total output error lifetime drift [3]	E_{total_drift}	-2.8		2.8	%	After reliability test, TA = 25°C

[1]: In production, total error and sensitivity error are measured and calculated at 10A, A single part will not have both the maximum/minimum sensitivity error and maximum/minimum offset voltage.

[2]: When TA = 25°C~125°C, Min/Max value is the mean value +/-3sigma; When TA = -40°C~25°C, Typical value is the mean value +/-3sigma.according to the statistical law, 99.73% of the data is in this range Inside.

[3]: The reliability data is implemented in accordance with the AEC-Q100 standard. This item is derived from the experimental results with the largest change after the PC, HTS, HAST, UHAST, HTOL, TC and other test data required by AEC-Q100 Grade1 as a reference , this is the worst case.

Copyright © 2025, NOVOSENSE

5.11. NSM2012-20B3F-DSPR Characteristics (TA= -40°C to 125°C, VCC = 3.3V, unless otherwise specified)

Parameters	Symbol	Min	Typ	Max	Unit	Comments
Current sensing range	I_{pr}	-20		20	A	
Sensitivity	Sens		66		mV/A	$I_{prmin}<I_{pr}<I_{prmax}$
Reference voltage	V_{REF}		1.65		V	I_{pr}=0A
Sensitivity error[1][2]	E_{sens}	-2		2	%	TA = 25°C~125°C
			±3.5		%	TA = -40°C~25°C
Offset error[2]	V_{OE}	-10		10	mV	TA = 25°C~125°C, I_{pr}=0A
			±10		mV	TA = -40°C~25°C, I_{pr}=0A
Reference error[2]	V_{RE}	-10		10	mV	TA = 25°C~125°C, I_{pr}=0A, Vref-1.65V
			±10		mV	TA = -40°C~25°C, I_{pr}=0A, Vref-1.65V
Total output error [1]	E_{total}	-2		2	%	TA = 25°C~125°C
			±3.5		%	TA = -40°C~25°C
Sensitivity error lifetime drift[3]	E_{sens_drift}	-2.3		2.3	%	After reliability test, TA = 25°C
Offset error lifetime drift[3]	V_{OE_drift}	-12		12	mV	After reliability test, TA = 25°C
Total output error lifetime drift [3]	E_{total_drift}	-2.8		2.8	%	After reliability test, TA = 25°C

[1]: In production, total error and sensitivity error are measured and calculated at 20A, A single part will not have both the maximum/minimum sensitivity error and maximum/minimum offset voltage.

[2]: When TA = 25°C~125°C, Min/Max value is the mean value +/-3sigma; When TA = -40°C~25°C, Typical value is the mean value +/-3sigma.according to the statistical law, 99.73% of the data is in this range Inside.

[3]: The reliability data is implemented in accordance with the AEC-Q100 standard. This item is derived from the experimental results with the largest change after the PC, HTS, HAST, UHAST, HTOL, TC and other test data required by AEC-Q100 Grade1 as a reference, this is the worst case.

Copyright © 2025, NOVOSENSE

5.12. NSM2012-20B3R-DSPR Characteristics (TA= -40°C to 125°C, VCC = 3.3V, unless otherwise specified)

Parameters	Symbol	Min	Typ	Max	Unit	Comments
Current sensing range	I_{pr}	-20		20	A	
Sensitivity	Sens		66		mV/A	$I_{prmin}<I_{pr}<I_{prmax}$
Zero current output voltage	V_{QVO}		$V_{CC}/2$		V	I_{pr}=0A
Sensitivity error[1][2]	E_{sens}	-2		2	%	TA = 25°C~125°C
			±3.5		%	TA = -40°C~25°C
Offset error[2]	V_{OE}	-10		10	mV	TA = 25°C~125°C, Ipr=0A
			±10		mV	TA = -40°C~25°C, Ipr=0A
Total output error[1][2]	E_{total}	-2		2	%	TA = 25°C~125°C
			±3.5		%	TA = -40°C~25°C
Sensitivity error lifetime drift[3]	E_{sens_drift}	-2.3		2.3	%	After reliability test, TA = 25°C
Offset error lifetime drift[3]	V_{OE_drift}	-12		12	mV	After reliability test, TA = 25°C
Total output error lifetime drift [3]	E_{total_drift}	-2.8		2.8	%	After reliability test, TA = 25°C

[1]: In production, total error and sensitivity error are measured and calculated at 20A, A single part will not have both the maximum/minimum sensitivity error and maximum/minimum offset voltage.

[2]: When TA = 25°C~125°C, Min/Max value is the mean value +/-3sigma; When TA = -40°C~25°C, Typical value is the mean value +/-3sigma.according to the statistical law, 99.73% of the data is in this range Inside.

[3]: The reliability data is implemented in accordance with the AEC-Q100 standard. This item is derived from the experimental results with the largest change after the PC, HTS, HAST, UHAST, HTOL, TC and other test data required by AEC-Q100 Grade1 as a reference , this is the worst case.

Copyright © 2025, NOVOSENSE

5.13. NSM2012-20B5F-DSPR Characteristics (TA= -40°C to 125°C, VCC = 5V, unless otherwise specified)

Parameters	Symbol	Min	Typ	Max	Unit	Comments
Current sensing range	I_{pr}	-20		20	A	
Sensitivity	Sens		100		mV/A	$I_{prmin}<I_{pr}<I_{prmax}$
Reference voltage	V_{REF}		2.5		V	I_{pr}=0A
Sensitivity error[1][2]	E_{sens}	-2		2	%	TA = 25°C~125°C
			±3.5		%	TA = -40°C~25°C
Offset error[2]	V_{OE}	-10		10	mV	TA = 25°C~125°C, I_{pr}=0A
			±10		mV	TA = -40°C~25°C, I_{pr}=0A
Reference error[2]	V_{RE}	-10		10	mV	TA = 25°C~125°C, I_{pr}=0A, Vref-2.5V
			±10		mV	TA = -40°C~25°C, I_{pr}=0A, Vref-2.5V
Total output error [1]	E_{total}	-2		2	%	TA = 25°C~125°C
			±3.5		%	TA = -40°C~25°C
Sensitivity error lifetime drift[3]	E_{sens_drift}	-2.3		2.3	%	After reliability test, TA = 25°C
Offset error lifetime drift[3]	V_{OE_drift}	-12		12	mV	After reliability test, TA = 25°C
Total output error lifetime drift [3]	E_{total_drift}	-2.8		2.8	%	After reliability test, TA = 25°C

[1]: In production, total error and sensitivity error are measured and calculated at 20A, A single part will not have both the maximum/minimum sensitivity error and maximum/minimum offset voltage.

[2]: When TA = 25°C~125°C, Min/Max value is the mean value +/-3sigma; When TA = -40°C~25°C, Typical value is the mean value +/-3sigma.according to the statistical law, 99.73% of the data is in this range Inside.

[3]: The reliability data is implemented in accordance with the AEC-Q100 standard. This item is derived from the experimental results with the largest change after the PC, HTS, HAST, UHAST, HTOL, TC and other test data required by AEC-Q100 Grade1 as a reference, this is the worst case.

Copyright © 2025, NOVOSENSE

5.14. NSM2012-20B5R-DSPR Characteristics (TA= -40°C to 125°C, VCC = 5V, unless otherwise specified)

Parameters	Symbol	Min	Typ	Max	Unit	Comments
Current sensing range	I_{pr}	-20		20	A	
Sensitivity	Sens		100		mV/A	$I_{prmin}<I_{pr}<I_{prmax}$
Zero current output voltage	V_{QVO}		$V_{CC}/2$		V	I_{pr}=0A
Sensitivity error[1][2]	E_{sens}	-2		2	%	TA = 25°C~125°C
			±3.5		%	TA = -40°C~25°C
Offset error[2]	V_{OE}	-10		10	mV	TA = 25°C~125°C, Ipr=0A
			±10		mV	TA = -40°C~25°C, Ipr=0A
Total output error[1][2]	E_{total}	-2		2	%	TA = 25°C~125°C
			±3.5		%	TA = -40°C~25°C
Sensitivity error lifetime drift[3]	E_{sens_drift}	-2.3		2.3	%	After reliability test, TA = 25°C
Offset error lifetime drift[3]	V_{OE_drift}	-12		12	mV	After reliability test, TA = 25°C
Total output error lifetime drift [3]	E_{total_drift}	-2.8		2.8	%	After reliability test, TA = 25°C

[1]: In production, total error and sensitivity error are measured and calculated at 10A, A single part will not have both the maximum/minimum sensitivity error and maximum/minimum offset voltage.

[2]: When TA = 25°C~125°C, Min/Max value is the mean value +/-3sigma; When TA = -40°C~25°C, Typical value is the mean value +/-3sigma.according to the statistical law, 99.73% of the data is in this range Inside.

[3]: The reliability data is implemented in accordance with the AEC-Q100 standard. This item is derived from the experimental results with the largest change after the PC, HTS, HAST, UHAST, HTOL, TC and other test data required by AEC-Q100 Grade1 as a reference , this is the worst case.

Copyright © 2025, NOVOSENSE

5.15. NSM2012-25B5F-DSPR Characteristics (TA= -40°C to 125°C, VCC = 5V, unless otherwise specified)

Parameters	Symbol	Min	Typ	Max	Unit	Comments
Current sensing range	I_{pr}	-25		25	A	
Sensitivity	Sens		80		mV/A	$I_{prmin}<I_{pr}<I_{prmax}$
Reference voltage	V_{REF}		2.5		V	I_{pr}=0A
Sensitivity error[1][2]	E_{sens}	-2		2	%	TA = 25°C~125°C
			±3.5		%	TA = -40°C~25°C
Offset error[2]	V_{OE}	-10		10	mV	TA = 25°C~125°C, I_{pr}=0A
			±10		mV	TA = -40°C~25°C, I_{pr}=0A
Reference error[2]	V_{RE}	-10		10	mV	TA = 25°C~125°C, I_{pr}=0A, Vref-2.5V
			±10		mV	TA = -40°C~25°C, I_{pr}=0A, Vref-2.5V
Total output error [1]	E_{total}	-2		2	%	TA = 25°C~125°C
			±3.5		%	TA = -40°C~25°C
Sensitivity error lifetime drift[3]	E_{sens_drift}	-2.3		2.3	%	After reliability test, TA = 25°C
Offset error lifetime drift[3]	V_{OE_drift}	-12		12	mV	After reliability test, TA = 25°C
Total output error lifetime drift [3]	E_{total_drift}	-2.8		2.8	%	After reliability test, TA = 25°C

[1]: In production, total error and sensitivity error are measured and calculated at 20A, A single part will not have both the maximum/minimum sensitivity error and maximum/minimum offset voltage.

[2]: When TA = 25°C~125°C, Min/Max value is the mean value +/-3sigma; When TA = -40°C~25°C, Typical value is the mean value +/-3sigma.according to the statistical law, 99.73% of the data is in this range Inside.

[3]: The reliability data is implemented in accordance with the AEC-Q100 standard. This item is derived from the experimental results with the largest change after the PC, HTS, HAST, UHAST, HTOL, TC and other test data required by AEC-Q100 Grade1 as a reference, this is the worst case.

Copyright © 2025, NOVOSENSE

5.16. NSM2012-25B5R-DSPR Characteristics (TA= -40°C to 125°C, VCC = 5V, unless otherwise specified)

Parameters	Symbol	Min	Typ	Max	Unit	Comments
Current sensing range	I_{pr}	-25		25	A	
Sensitivity	Sens		80		mV/A	$I_{prmin}<I_{pr}<I_{prmax}$
Zero current output voltage	V_{QVO}		$V_{CC}/2$		V	I_{pr}=0A
Sensitivity error[1][2]	E_{sens}	-2		2	%	TA = 25°C~125°C
			±3.5		%	TA = -40°C~25°C
Offset error[2]	V_{OE}	-10		10	mV	TA = 25°C~125°C, Ipr=0A
			±10		mV	TA = -40°C~25°C, Ipr=0A
Total output error[1][2]	E_{total}	-2		2	%	TA = 25°C~125°C
			±3.5		%	TA = -40°C~25°C
Sensitivity error lifetime drift[3]	E_{sens_drift}	-2.3		2.3	%	After reliability test, TA = 25°C
Offset error lifetime drift[3]	V_{OE_drift}	-12		12	mV	After reliability test, TA = 25°C
Total output error lifetime drift [3]	E_{total_drift}	-2.8		2.8	%	After reliability test, TA = 25°C

[1]: In production, total error and sensitivity error are measured and calculated at 20A, A single part will not have both the maximum/minimum sensitivity error and maximum/minimum offset voltage.

[2]: When TA = 25°C~125°C, Min/Max value is the mean value +/-3sigma; When TA = -40°C~25°C, Typical value is the mean value +/-3sigma.according to the statistical law, 99.73% of the data is in this range Inside.

[3]: The reliability data is implemented in accordance with the AEC-Q100 standard. This item is derived from the experimental results with the largest change after the PC, HTS, HAST, UHAST, HTOL, TC and other test data required by AEC-Q100 Grade1 as a reference , this is the worst case.

Copyright © 2025, NOVOSENSE

5.17. NSM2012-30B3R-DSPR Characteristics (TA= -40°C to 125°C, VCC = 3.3V, unless otherwise specified)

Parameters	Symbol	Min	Typ	Max	Unit	Comments
Current sensing range	I_{pr}	-30		30	A	
Sensitivity	Sens		44		mV/A	$I_{prmin}<I_{pr}<I_{prmax}$
Zero current output voltage	V_{QVO}		$V_{CC}/2$		V	I_{pr}=0A
Sensitivity error[1][2]	E_{sens}	-2		2	%	TA = 25°C~125°C
			±3.5		%	TA = -40°C~25°C
Offset error[2]	V_{OE}	-10		10	mV	TA = 25°C~125°C, Ipr=0A
			±10		mV	TA = -40°C~25°C, Ipr=0A
Total output error[1][2]	E_{total}	-2		2	%	TA = 25°C~125°C
			±3.5		%	TA = -40°C~25°C
Sensitivity error lifetime drift[3]	E_{sens_drift}	-2.3		2.3	%	After reliability test, TA = 25°C
Offset error lifetime drift[3]	V_{OE_drift}	-12		12	mV	After reliability test, TA = 25°C
Total output error lifetime drift [3]	E_{total_drift}	-2.8		2.8	%	After reliability test, TA = 25°C

[1]: In production, total error and sensitivity error are measured and calculated at 20A, A single part will not have both the maximum/minimum sensitivity error and maximum/minimum offset voltage.

[2]: When TA = 25°C~125°C, Min/Max value is the mean value +/-3sigma; When TA = -40°C~25°C, Typical value is the mean value +/-3sigma.according to the statistical law, 99.73% of the data is in this range Inside.

[3]: The reliability data is implemented in accordance with the AEC-Q100 standard. This item is derived from the experimental results with the largest change after the PC, HTS, HAST, UHAST, HTOL, TC and other test data required by AEC-Q100 Grade1 as a reference , this is the worst case.

Copyright © 2025, NOVOSENSE

5.18. NSM2012-30B5F-DSPR Characteristics (TA= -40°C to 125°C, VCC = 5V, unless otherwise specified)

Parameters	Symbol	Min	Typ	Max	Unit	Comments
Current sensing range	I_{pr}	-30		30	A	
Sensitivity	Sens		66.67		mV/A	$I_{prmin}<I_{pr}<I_{prmax}$
Reference voltage	V_{REF}		2.5		V	I_{pr}=0A
Sensitivity error[1][2]	E_{sens}	-2		2	%	TA = 25°C~125°C
			±3.5		%	TA = -40°C~25°C
Offset error[2]	V_{OE}	-10		10	mV	TA = 25°C~125°C, I_{pr}=0A
			±10		mV	TA = -40°C~25°C, I_{pr}=0A
Reference error[2]	V_{RE}	-10		10	mV	TA = 25°C~125°C, I_{pr}=0A, Vref-2.5V
			±10		mV	TA = -40°C~25°C, I_{pr}=0A, Vref-2.5V
Total output error [1]	E_{total}	-2		2	%	TA = 25°C~125°C
			±3.5		%	TA = -40°C~25°C
Sensitivity error lifetime drift[3]	E_{sens_drift}	-2.3		2.3	%	After reliability test, TA = 25°C
Offset error lifetime drift[3]	V_{OE_drift}	-12		12	mV	After reliability test, TA = 25°C
Total output error lifetime drift [3]	E_{total_drift}	-2.8		2.8	%	After reliability test, TA = 25°C

[1]: In production, total error and sensitivity error are measured and calculated at 20A, A single part will not have both the maximum/minimum sensitivity error and maximum/minimum offset voltage.

[2]: When TA = 25°C~125°C, Min/Max value is the mean value +/-3sigma; When TA = -40°C~25°C, Typical value is the mean value +/-3sigma.according to the statistical law, 99.73% of the data is in this range Inside.

[3]: The reliability data is implemented in accordance with the AEC-Q100 standard. This item is derived from the experimental results with the largest change after the PC, HTS, HAST, UHAST, HTOL, TC and other test data required by AEC-Q100 Grade1 as a reference, this is the worst case.

Copyright © 2025, NOVOSENSE

5.19. NSM2012-30B5R-DSPR Characteristics (TA= -40°C to 125°C, VCC = 5V, unless otherwise specified)

Parameters	Symbol	Min	Typ	Max	Unit	Comments
Current sensing range	I_{pr}	-30		30	A	
Sensitivity	Sens		66.67		mV/A	$I_{prmin}<I_{pr}<I_{prmax}$
Zero current output voltage	V_{QVO}		$V_{CC}/2$		V	I_{pr}=0A
Sensitivity error[1][2]	E_{sens}	-2		2	%	TA = 25°C~125°C
			±3.5		%	TA = -40°C~25°C
Offset error[2]	V_{OE}	-10		10	mV	TA = 25°C~125°C, Ipr=0A
			±10		mV	TA = -40°C~25°C, Ipr=0A
Total output error[1][2]	E_{total}	-2		2	%	TA = 25°C~125°C
			±3.5		%	TA = -40°C~25°C
Sensitivity error lifetime drift[3]	E_{sens_drift}	-2.3		2.3	%	After reliability test, TA = 25°C
Offset error lifetime drift[3]	V_{OE_drift}	-12		12	mV	After reliability test, TA = 25°C
Total output error lifetime drift [3]	E_{total_drift}	-2.8		2.8	%	After reliability test, TA = 25°C

[1]: In production, total error and sensitivity error are measured and calculated at 20A, A single part will not have both the maximum/minimum sensitivity error and maximum/minimum offset voltage.

[2]: When TA = 25°C~125°C, Min/Max value is the mean value +/-3sigma; When TA = -40°C~25°C, Typical value is the mean value +/-3sigma.according to the statistical law, 99.73% of the data is in this range Inside.

[3]: The reliability data is implemented in accordance with the AEC-Q100 standard. This item is derived from the experimental results with the largest change after the PC, HTS, HAST, UHAST, HTOL, TC and other test data required by AEC-Q100 Grade1 as a reference , this is the worst case.

Copyright © 2025, NOVOSENSE

5.20. NSM2012-30U5R-DSPR Characteristics (TA= -40°C to 125°C, VCC = 5V, unless otherwise specified)

Parameters	Symbol	Min	Typ	Max	Unit	Comments
Current sensing range	I_{pr}	0		30	A	
Sensitivity	Sens		133.3		mV/A	$I_{prmin}<I_{pr}<I_{prmax}$
Zero current output voltage	V_{QVO}		$0.1*V_{CC}$		V	I_{pr}=0A
Sensitivity error[1][2]	E_{sens}	-2		2	%	TA = 25°C~125°C
			±3.5		%	TA = -40°C~25°C
Offset error[2]	V_{OE}	-10		10	mV	TA = 25°C~125°C, Ipr=0A
			±10		mV	TA = -40°C~25°C, Ipr=0A
Total output error[1][2]	E_{total}	-2		2	%	TA = 25°C~125°C
			±3.5		%	TA = -40°C~25°C
Sensitivity error lifetime drift[3]	E_{sens_drift}	-2.3		2.3	%	After reliability test, TA = 25°C
Offset error lifetime drift[3]	V_{OE_drift}	-12		12	mV	After reliability test, TA = 25°C
Total output error lifetime drift [3]	E_{total_drift}	-2.8		2.8	%	After reliability test, TA = 25°C

[1]: In production, total error and sensitivity error are measured and calculated at 20A, A single part will not have both the maximum/minimum sensitivity error and maximum/minimum offset voltage.

[2]: When TA = 25°C~125°C, Min/Max value is the mean value +/-3sigma; When TA = -40°C~25°C, Typical value is the mean value +/-3sigma.according to the statistical law, 99.73% of the data is in this range Inside.

[3]: The reliability data is implemented in accordance with the AEC-Q100 standard. This item is derived from the experimental results with the largest change after the PC, HTS, HAST, UHAST, HTOL, TC and other test data required by AEC-Q100 Grade1 as a reference , this is the worst case.

Copyright © 2025, NOVOSENSE

5.21. NSM2012-40B3R-DSPR Characteristics (TA= -40°C to 125°C, VCC = 3.3V, unless otherwise specified)

Parameters	Symbol	Min	Typ	Max	Unit	Comments
Current sensing range	I_{pr}	-40		40	A	
Sensitivity	Sens		33		mV/A	$I_{prmin}<I_{pr}<I_{prmax}$
Zero current output voltage	V_{QVO}		$V_{CC}/2$		V	I_{pr}=0A
Sensitivity error[1][2]	E_{sens}	-2		2	%	TA = 25°C~125°C
			±3.5		%	TA = -40°C~25°C
Offset error[2]	V_{OE}	-10		10	mV	TA = 25°C~125°C, Ipr=0A
			±10		mV	TA = -40°C~25°C, Ipr=0A
Total output error[1][2]	E_{total}	-2		2	%	TA = 25°C~125°C
			±3.5		%	TA = -40°C~25°C
Sensitivity error lifetime drift[3]	E_{sens_drift}	-2.3		2.3	%	After reliability test, TA = 25°C
Offset error lifetime drift[3]	V_{OE_drift}	-12		12	mV	After reliability test, TA = 25°C
Total output error lifetime drift [3]	E_{total_drift}	-2.8		2.8	%	After reliability test, TA = 25°C

[1]: In production, total error and sensitivity error are measured and calculated at 20A, A single part will not have both the maximum/minimum sensitivity error and maximum/minimum offset voltage.

[2]: When TA = 25°C~125°C, Min/Max value is the mean value +/-3sigma; When TA = -40°C~25°C, Typical value is the mean value +/-3sigma.according to the statistical law, 99.73% of the data is in this range Inside.

[3]: The reliability data is implemented in accordance with the AEC-Q100 standard. This item is derived from the experimental results with the largest change after the PC, HTS, HAST, UHAST, HTOL, TC and other test data required by AEC-Q100 Grade1 as a reference , this is the worst case.

Copyright © 2025, NOVOSENSE

5.22. NSM2012-40B5R-DSPR Characteristics (TA= -40°C to 125°C, VCC = 5V, unless otherwise specified)

Parameters	Symbol	Min	Typ	Max	Unit	Comments
Current sensing range	I_{pr}	-40		40	A	
Sensitivity	Sens		50		mV/A	$I_{prmin}<I_{pr}<I_{prmax}$
Zero current output voltage	V_{QVO}		$V_{CC}/2$		V	I_{pr}=0A
Sensitivity error[1][2]	E_{sens}	-2		2	%	TA = 25°C~125°C
			±3.5		%	TA = -40°C~25°C
Offset error[2]	V_{OE}	-10		10	mV	TA = 25°C~125°C, Ipr=0A
			±10		mV	TA = -40°C~25°C, Ipr=0A
Total output error[1][2]	E_{total}	-2		2	%	TA = 25°C~125°C
			±3.5		%	TA = -40°C~25°C
Sensitivity error lifetime drift[3]	E_{sens_drift}	-2.3		2.3	%	After reliability test, TA = 25°C
Offset error lifetime drift[3]	V_{OE_drift}	-12		12	mV	After reliability test, TA = 25°C
Total output error lifetime drift [3]	E_{total_drift}	-2.8		2.8	%	After reliability test, TA = 25°C

[1]: In production, total error and sensitivity error are measured and calculated at 20A, A single part will not have both the maximum/minimum sensitivity error and maximum/minimum offset voltage.

[2]: When TA = 25°C~125°C, Min/Max value is the mean value +/-3sigma; When TA = -40°C~25°C, Typical value is the mean value +/-3sigma.according to the statistical law, 99.73% of the data is in this range Inside.

[3]: The reliability data is implemented in accordance with the AEC-Q100 standard. This item is derived from the experimental results with the largest change after the PC, HTS, HAST, UHAST, HTOL, TC and other test data required by AEC-Q100 Grade1 as a reference , this is the worst case.

Copyright © 2025, NOVOSENSE

5.23. NSM2012-50B3R-DSPR Characteristics (TA= -40°C to 125°C, VCC = 3.3V, unless otherwise specified)

Parameters	Symbol	Min	Typ	Max	Unit	Comments
Current sensing range	I_{pr}	-50		50	A	
Sensitivity	Sens		26.4		mV/A	$I_{prmin}<I_{pr}<I_{prmax}$
Zero current output voltage	V_{QVO}		$V_{CC}/2$		V	I_{pr}=0A
Sensitivity error[1][2]	E_{sens}	-2		2	%	TA = 25°C~125°C
			±3.5		%	TA = -40°C~25°C
Offset error[2]	V_{OE}	-10		10	mV	TA = 25°C~125°C, Ipr=0A
			±10		mV	TA = -40°C~25°C, Ipr=0A
Total output error[1][2]	E_{total}	-2		2	%	TA = 25°C~125°C
			±3.5		%	TA = -40°C~25°C
Sensitivity error lifetime drift[3]	E_{sens_drift}	-2.3		2.3	%	After reliability test, TA = 25°C
Offset error lifetime drift[3]	V_{OE_drift}	-12		12	mV	After reliability test, TA = 25°C
Total output error lifetime drift [3]	E_{total_drift}	-2.8		2.8	%	After reliability test, TA = 25°C

[1]: In production, total error and sensitivity error are measured and calculated at 20A, A single part will not have both the maximum/minimum sensitivity error and maximum/minimum offset voltage.

[2]: When TA = 25°C~125°C, Min/Max value is the mean value +/-3sigma; When TA = -40°C~25°C, Typical value is the mean value +/-3sigma.according to the statistical law, 99.73% of the data is in this range Inside.

[3]: The reliability data is implemented in accordance with the AEC-Q100 standard. This item is derived from the experimental results with the largest change after the PC, HTS, HAST, UHAST, HTOL, TC and other test data required by AEC-Q100 Grade1 as a reference , this is the worst case.

Copyright © 2025, NOVOSENSE

5.24. NSM2012-50B5F-DSPR Characteristics (TA= -40°C to 125°C, VCC = 5V, unless otherwise specified)

Parameters	Symbol	Min	Typ	Max	Unit	Comments
Current sensing range	I_{pr}	-50		50	A	
Sensitivity	Sens		40		mV/A	$I_{prmin}<I_{pr}<I_{prmax}$
Reference voltage	V_{REF}		2.5		V	I_{pr}=0A
Sensitivity error[1][2]	E_{sens}	-2		2	%	TA = 25°C~125°C
			±3.5		%	TA = -40°C~25°C
Offset error[2]	V_{OE}	-10		10	mV	TA = 25°C~125°C, I_{pr}=0A
			±10		mV	TA = -40°C~25°C, I_{pr}=0A
Reference error[2]	V_{RE}	-10		10	mV	TA = 25°C~125°C, I_{pr}=0A, Vref-2.5V
			±10		mV	TA = -40°C~25°C, I_{pr}=0A, Vref-2.5V
Total output error [1]	E_{total}	-2		2	%	TA = 25°C~125°C
			±3.5		%	TA = -40°C~25°C
Sensitivity error lifetime drift[3]	E_{sens_drift}	-2.3		2.3	%	After reliability test, TA = 25°C
Offset error lifetime drift[3]	V_{OE_drift}	-12		12	mV	After reliability test, TA = 25°C
Total output error lifetime drift [3]	E_{total_drift}	-2.8		2.8	%	After reliability test, TA = 25°C

[1]: In production, total error and sensitivity error are measured and calculated at 20A, A single part will not have both the maximum/minimum sensitivity error and maximum/minimum offset voltage.

[2]: When TA = 25°C~125°C, Min/Max value is the mean value +/-3sigma; When TA = -40°C~25°C, Typical value is the mean value +/-3sigma.according to the statistical law, 99.73% of the data is in this range Inside.

[3]: The reliability data is implemented in accordance with the AEC-Q100 standard. This item is derived from the experimental results with the largest change after the PC, HTS, HAST, UHAST, HTOL, TC and other test data required by AEC-Q100 Grade1 as a reference, this is the worst case.

Copyright © 2025, NOVOSENSE

5.25. NSM2012-50B5R-DSPR Characteristics (TA= -40°C to 125°C, VCC = 5V, unless otherwise specified)

Parameters	Symbol	Min	Typ	Max	Unit	Comments
Current sensing range	I_{pr}	-50		50	A	
Sensitivity	Sens		40		mV/A	$I_{prmin}<I_{pr}<I_{prmax}$
Zero current output voltage	V_{QVO}		$V_{CC}/2$		V	I_{pr}=0A
Sensitivity error[1][2]	E_{sens}	-2		2	%	TA = 25°C~125°C
			±3.5		%	TA = -40°C~25°C
Offset error[2]	V_{OE}	-10		10	mV	TA = 25°C~125°C, Ipr=0A
			±10		mV	TA = -40°C~25°C, Ipr=0A
Total output error[1][2]	E_{total}	-2		2	%	TA = 25°C~125°C
			±3.5		%	TA = -40°C~25°C
Sensitivity error lifetime drift[3]	E_{sens_drift}	-2.3		2.3	%	After reliability test, TA = 25°C
Offset error lifetime drift[3]	V_{OE_drift}	-12		12	mV	After reliability test, TA = 25°C
Total output error lifetime drift [3]	E_{total_drift}	-2.8		2.8	%	After reliability test, TA = 25°C

[1]: In production, total error and sensitivity error are measured and calculated at 20A, A single part will not have both the maximum/minimum sensitivity error and maximum/minimum offset voltage.

[2]: When TA = 25°C~125°C, Min/Max value is the mean value +/-3sigma; When TA = -40°C~25°C, Typical value is the mean value +/-3sigma.according to the statistical law, 99.73% of the data is in this range Inside.

[3]: The reliability data is implemented in accordance with the AEC-Q100 standard. This item is derived from the experimental results with the largest change after the PC, HTS, HAST, UHAST, HTOL, TC and other test data required by AEC-Q100 Grade1 as a reference , this is the worst case.

Copyright © 2025, NOVOSENSE

5.26. NSM2012-50U5F-DSPR Characteristics (TA= -40°C to 125°C, VCC = 5V, unless otherwise specified)

Parameters	Symbol	Min	Typ	Max	Unit	Comments
Current sensing range	I_{pr}	0		50	A	
Sensitivity	Sens		80		mV/A	$I_{prmin}<I_{pr}<I_{prmax}$
Reference voltage	V_{REF}		0.5		V	I_{pr}=0A
Sensitivity error[1][2]	E_{sens}	-2		2	%	TA = 25°C~125°C
			±3.5		%	TA = -40°C~25°C
Offset error[2]	V_{OE}	-10		10	mV	TA = 25°C~125°C, I_{pr}=0A
			±10		mV	TA = -40°C~25°C, I_{pr}=0A
Reference error[2]	V_{RE}	-10		10	mV	TA = 25°C~125°C, I_{pr}=0A, Vref-0.5V
			±10		mV	TA = -40°C~25°C, I_{pr}=0A, Vref-0.5V
Total output error [1]	E_{total}	-2		2	%	TA = 25°C~125°C
			±3.5		%	TA = -40°C~25°C
Sensitivity error lifetime drift[3]	E_{sens_drift}	-2.3		2.3	%	After reliability test, TA = 25°C
Offset error lifetime drift[3]	V_{OE_drift}	-12		12	mV	After reliability test, TA = 25°C
Total output error lifetime drift [3]	E_{total_drift}	-2.8		2.8	%	After reliability test, TA = 25°C

[1]: In production, total error and sensitivity error are measured and calculated at 20A, A single part will not have both the maximum/minimum sensitivity error and maximum/minimum offset voltage.

[2]: When TA = 25°C~125°C, Min/Max value is the mean value +/-3sigma; When TA = -40°C~25°C, Typical value is the mean value +/-3sigma.according to the statistical law, 99.73% of the data is in this range Inside.

[3]: The reliability data is implemented in accordance with the AEC-Q100 standard. This item is derived from the experimental results with the largest change after the PC, HTS, HAST, UHAST, HTOL, TC and other test data required by AEC-Q100 Grade1 as a reference, this is the worst case.

Copyright © 2025, NOVOSENSE

5.27. NSM2012-65B5R-DSPR Characteristics (TA= -40°C to 125°C, VCC = 5V, unless otherwise specified)

Parameters	Symbol	Min	Typ	Max	Unit	Comments
Current sensing range	I_{pr}	-65		65	A	
Sensitivity	Sens		30.77		mV/A	$I_{prmin}<I_{pr}<I_{prmax}$
Zero current output voltage	V_{QVO}		$V_{CC}/2$		V	I_{pr}=0A
Sensitivity error[1][2]	E_{sens}	-2		2	%	TA = 25°C~125°C
			±3.5		%	TA = -40°C~25°C
Offset error[2]	V_{OE}	-10		10	mV	TA = 25°C~125°C, Ipr=0A
			±10		mV	TA = -40°C~25°C, Ipr=0A
Total output error[1][2]	E_{total}	-2		2	%	TA = 25°C~125°C
			±3.5		%	TA = -40°C~25°C
Sensitivity error lifetime drift[3]	E_{sens_drift}	-2.3		2.3	%	After reliability test, TA = 25°C
Offset error lifetime drift[3]	V_{OE_drift}	-12		12	mV	After reliability test, TA = 25°C
Total output error lifetime drift [3]	E_{total_drift}	-2.8		2.8	%	After reliability test, TA = 25°C

[1]: In production, total error and sensitivity error are measured and calculated at 20A, A single part will not have both the maximum/minimum sensitivity error and maximum/minimum offset voltage.

[2]: When TA = 25°C~125°C, Min/Max value is the mean value +/-3sigma; When TA = -40°C~25°C, Typical value is the mean value +/-3sigma.according to the statistical law, 99.73% of the data is in this range Inside.

[3]: The reliability data is implemented in accordance with the AEC-Q100 standard. This item is derived from the experimental results with the largest change after the PC, HTS, HAST, UHAST, HTOL, TC and other test data required by AEC-Q100 Grade1 as a reference , this is the worst case.

*In the Chapter 5, the increase or decrease of the material number and the tightening of the parameter range, NOVOSENSE reserves the right not to send PCN to the customer, unless the expansion of the parameter range affects the customer's use and product performance.

Copyright © 2025, NOVOSENSE

5.28. Typical Performance Characteristics

NSM2012-30B3R-DSPR[1]

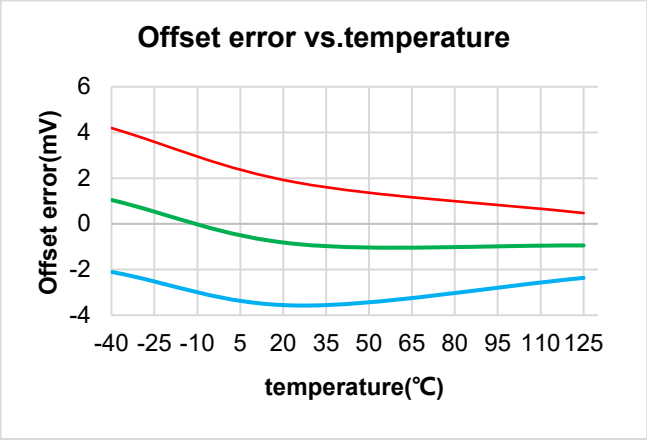

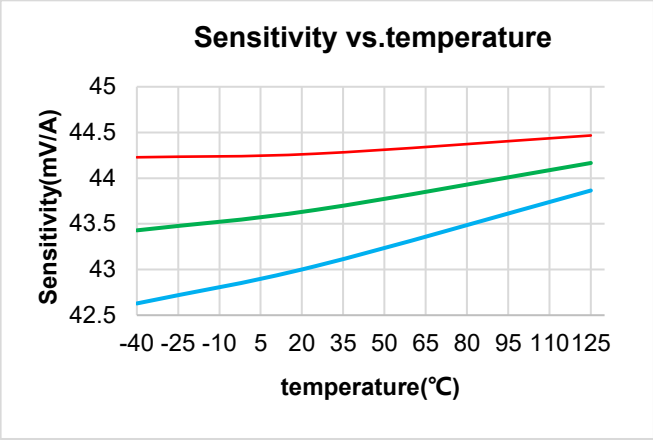

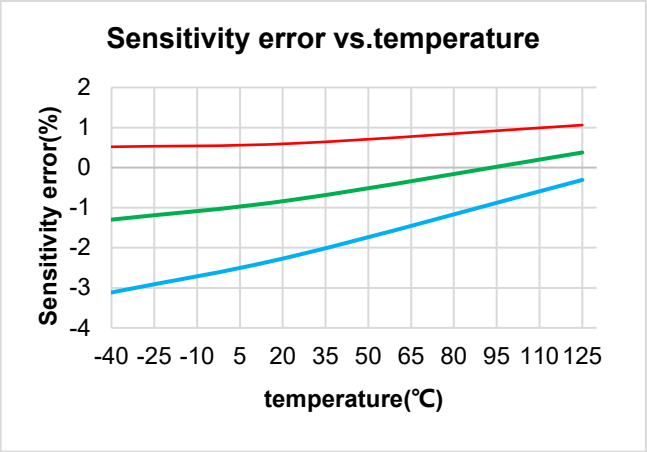

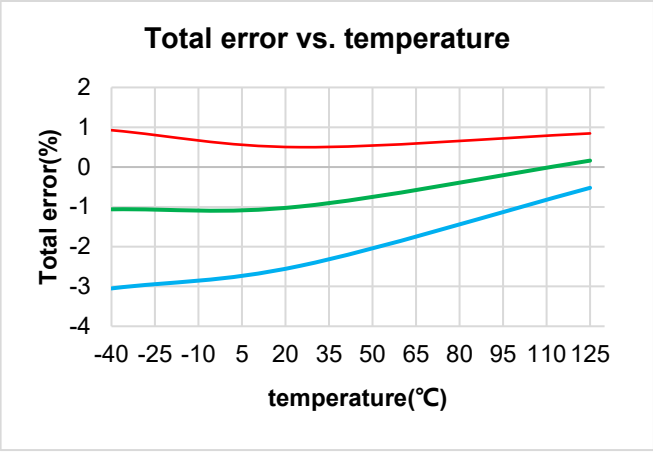

[1] : Green represents the average value, the red line represents the average value + 3 Sigma, and the blue line represents the average value-3 Sigma.

Copyright © 2025, NOVOSENSE

NSM2012-30B5R-DSPR[1]

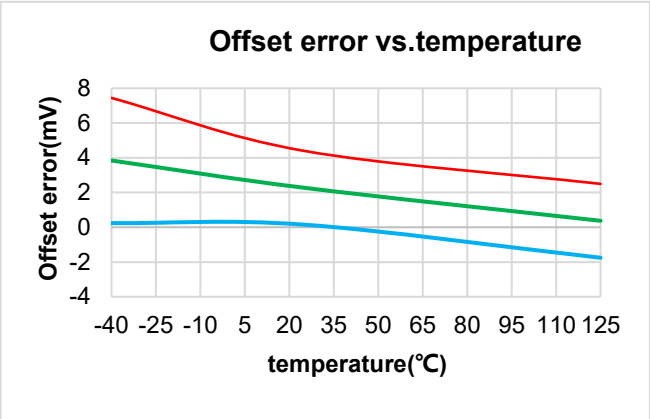

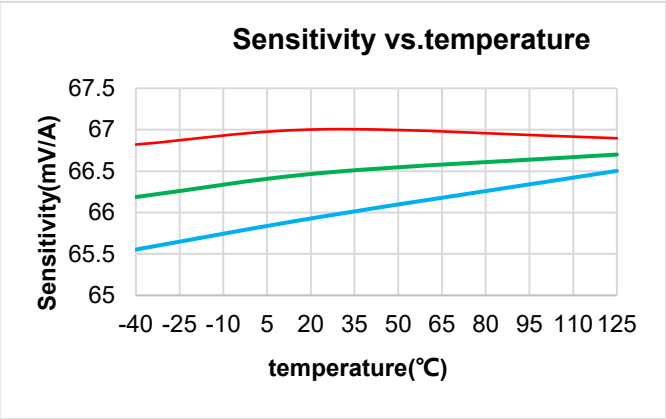

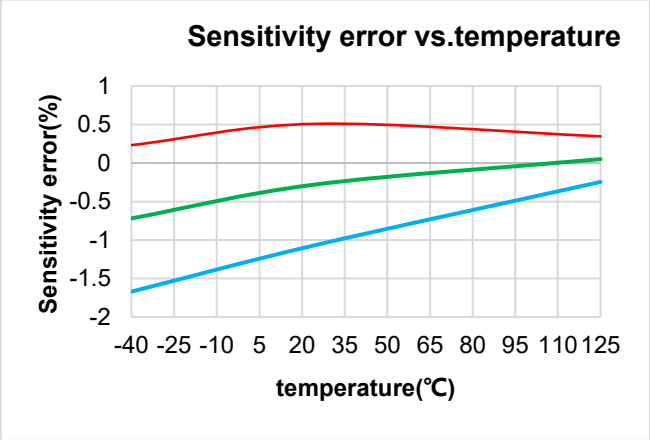

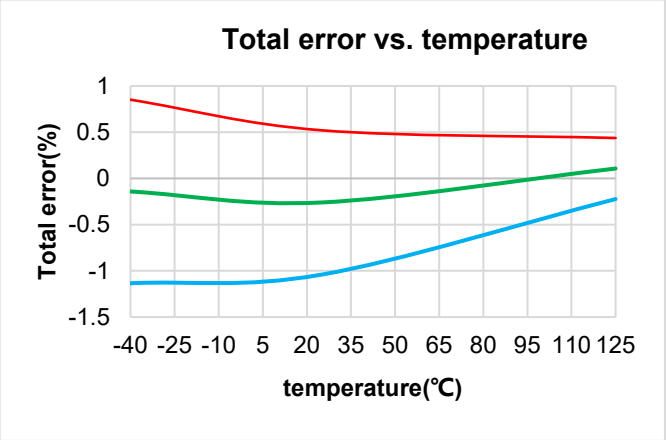

[1] ： Green represents the average value, the red line represents the average value + 3 Sigma, and the blue line represents the average value-3 Sigma.

Copyright © 2025, NOVOSENSE

NSM2012-10U5R-DSPR[1]

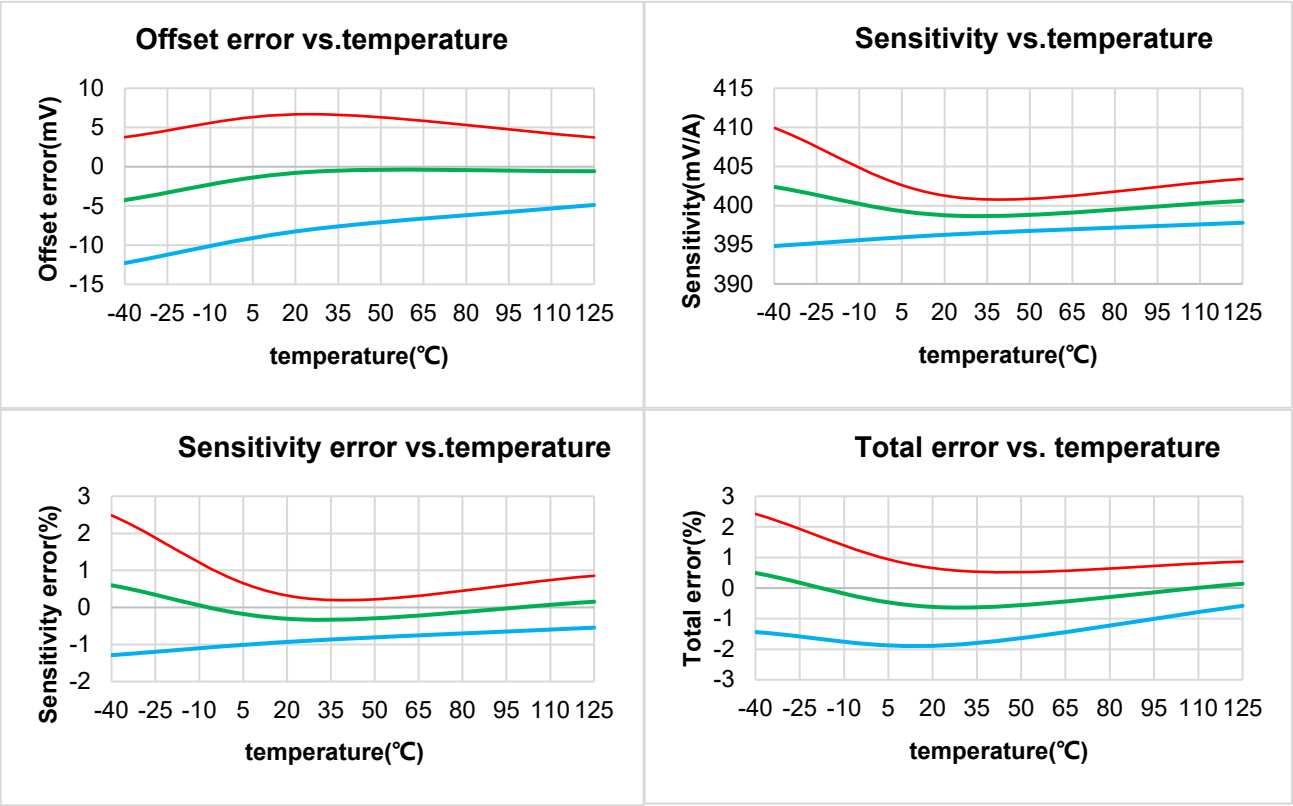

[1] : Green represents the average value, the red line represents the average value + 3 Sigma, and the blue line represents the average value-3 Sigma.

Copyright © 2025, NOVOSENSE

NSM2012-20B5R-DSPR[1]

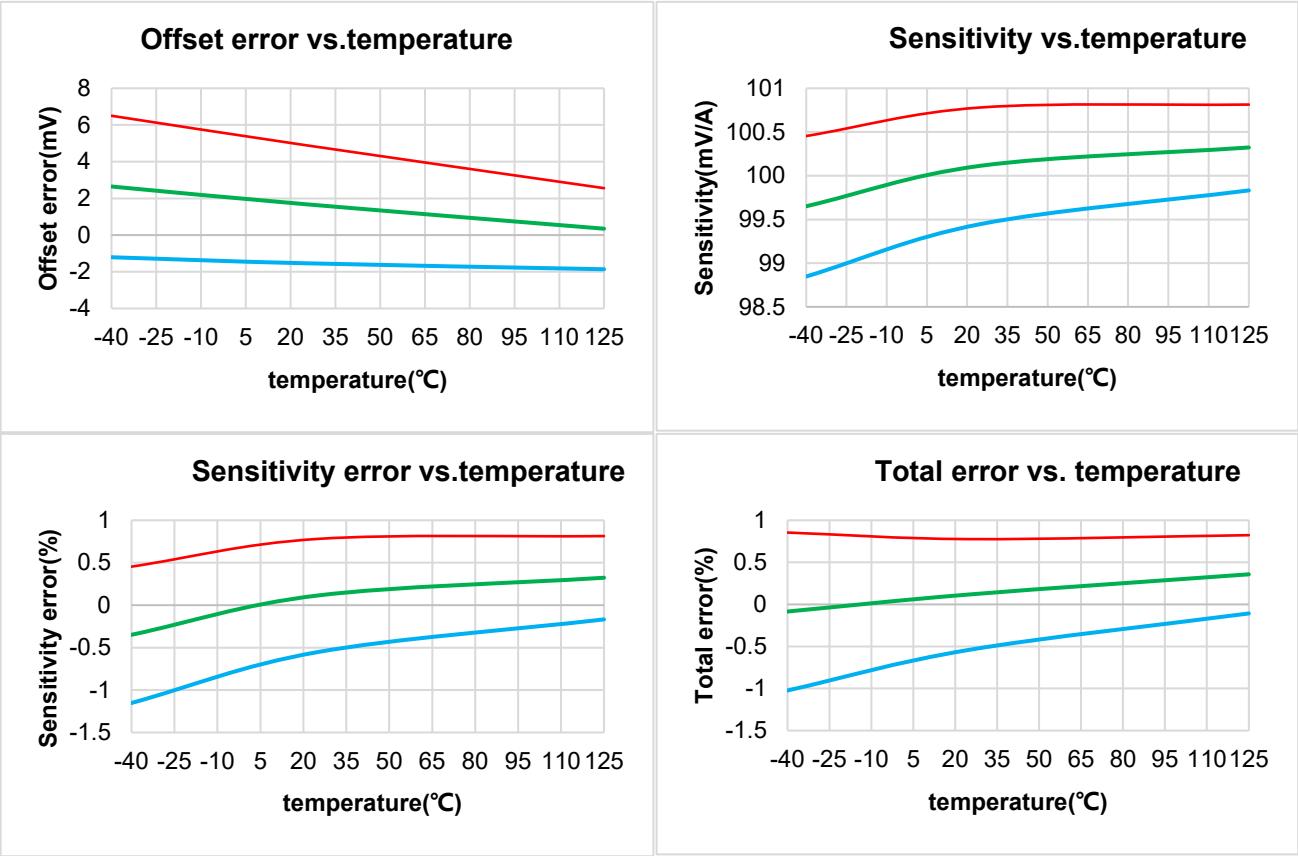

[1] : Green represents the average value, the red line represents the average value + 3 Sigma, and the blue line represents the average value-3 Sigma.

Copyright © 2025, NOVOSENSE

Response time, Yellow is Vout, Blue line is step primary current

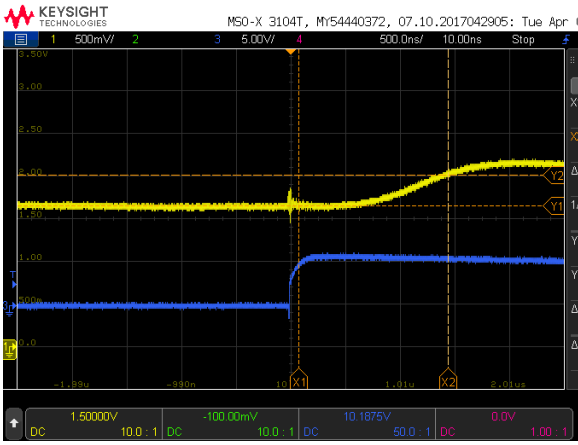

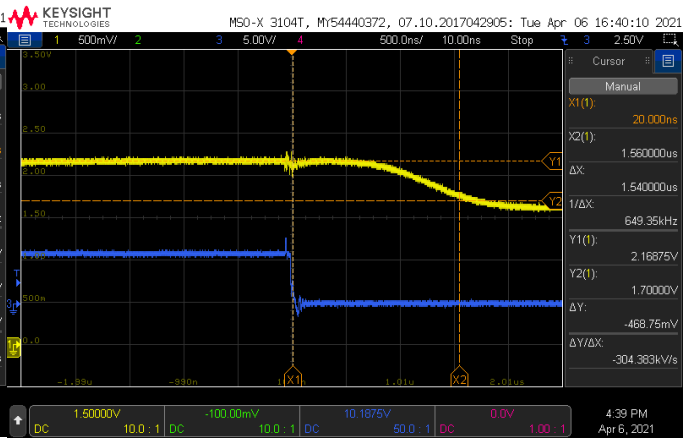

Rise time, yellow is Vout, blue line is step primary current

fall time, yellow is Vout, blue line is step primary current

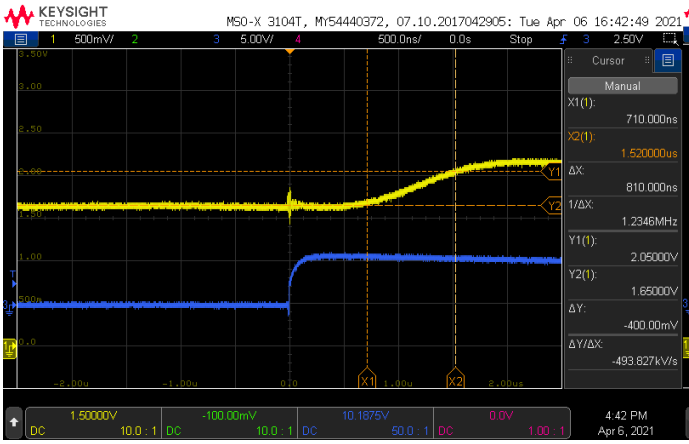

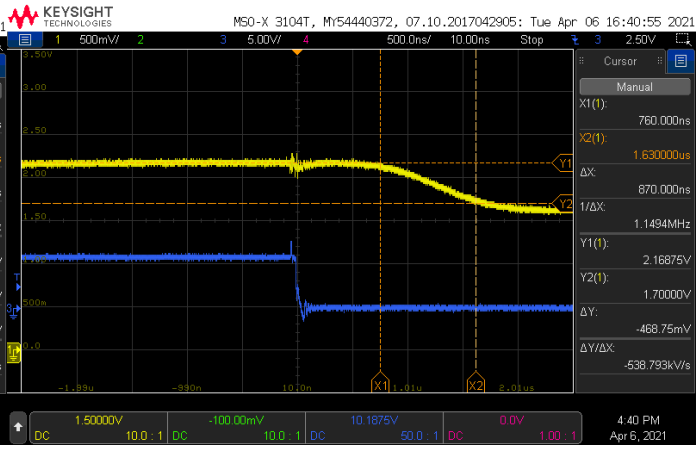

Yellow is Vout, blue is 1kHz , 1A primary current

Yellow is Vout, blue is 400kHz , 1A primary current

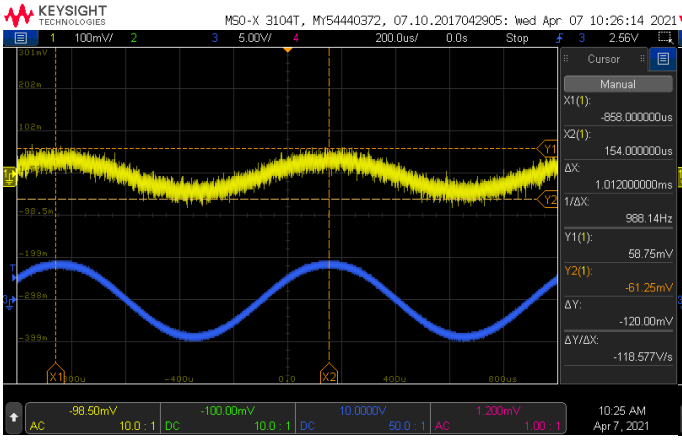

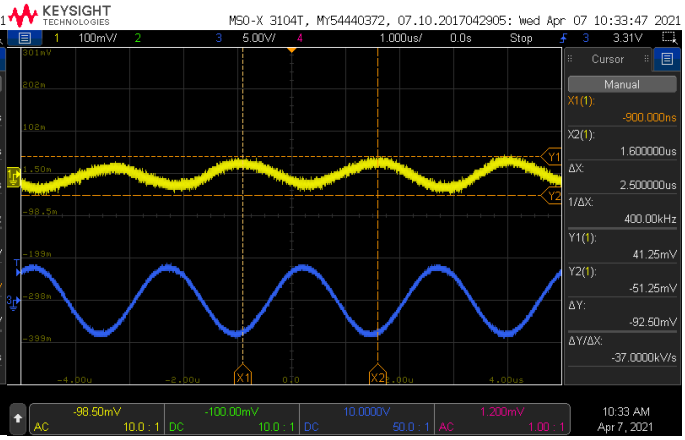

Note：Above waveform is evaluated by NSM2012-30B3R-DSPR

6. Function Description

6.1. Overview

NSM2012 current sensor can accurately measure AC/DC current while minimizing the overall measurement cost. Current sensors based on the Hall principle can be widely used in all current monitoring applications such as consumption, industry, and automotive. Compared with current transformers, the extremely small size of NSM2012 SOIC8 can help customers reduce the overall PCB area; compared to Shunt+isolated op amps, NSM2012 only needs low-voltage side power supply, reducing the inconvenience of isolated op amps requiring power supply for both high and low voltages. When using NSM2012, you only need to string the primary side pin into the measured current. According to the part of Maxwell equations about electricity and magnetism, a magnetic field will be generated around the energized conductor of the primary side. The Hall and conditioning amplifier circuits in NSM2012 will convert magnetic field into an output voltage, and the output voltage increases or decreases in proportion to the input current.

Benefiting from the typical value of the primary resistance of NSM2012 is only 1.2mohm, as long as the customer conducts a reasonable heat dissipation design, the temperature rise brought by the measurement of large current can be effectively reduced.

At the same time, NSM2012 uses dual Hall sampling internally, the common mode magnetic field brought by the outside world can be effectively reduced. According to the measured typical value, if the 100G common mode magnetic field acts vertically on the chip, it will only bring an error of less than 1G in the output. (Equivalent to input). Because NSM2012 has a good ability to resist common-mode magnetic fields, it can still maintain excellent performance in motor control or some harsh current measurement environments.

6.2. NSM2012 R version (single-ended ratiometric output)

The NSM2012 R version is a ratiometric output mode. The definition of ratiometric output is that if the power supply Vcc changes by 1% under ideal conditions, the output Vout will also change by 1% under ideal conditions. In this mode, the output calculation formula is as follows：

$$V_{out} = S_{Vcc} * I + QVO_{Vcc}$$

S_{VCC} is the sensitivity under the current supply voltage, and QVO_{VCC} is the zero point voltage of the current supply voltage, VCC/2 (bidirectional version) or 0.1 VCC (unidirectional version). If the customer chooses the measurement range of ±20A, then under the 5V power supply, the sensitivity is 4V/40A=100mV/A; if the power supply voltage is changed to 4.8V, the sensitivity will become 100mV/A*4.8V/5V=96mV/A, and the zero point voltage changes to 2.5V*4.8V/5V=2.4V at the same time. Due to the above proportional characteristics, the NSM2012 R version is mostly used in applications where the ADC power supply (reference) and the current sensor power supply use the same power supply.

6.3. NSM2012 F version (fixed output)

In some applications, the ADC and the current sensor do not share the same power rail, so the sensor needs to have absolute sensitivity, which does not change with the power supply voltage. The value of the sensing current can be obtained with (Vout-VREF)/Sensitivity. For the measurement range of ±50A, if Vout measures 3.7V and VREF measures 2.5V, then the input current is (3.7V-2.5V)/40mV/A=30A. In practical applications, the differential ADC can be used to directly collect Vout and VREF to obtain the input current, and the accuracy of the measurement will not be affected by power supply changes.

Copyright © 2025, NOVOSENSE

6.4. Definition of NSM2012 terms

Power-on time (T_{po})

When the power supply climbs from 0 to the chip's working range, NSM2012 needs some time to establish the internal working logic. Tpo time is defined as: the time from the power supply climbing to V_{ccmin} to the output reaching the steady state within ±10%, As shown below:

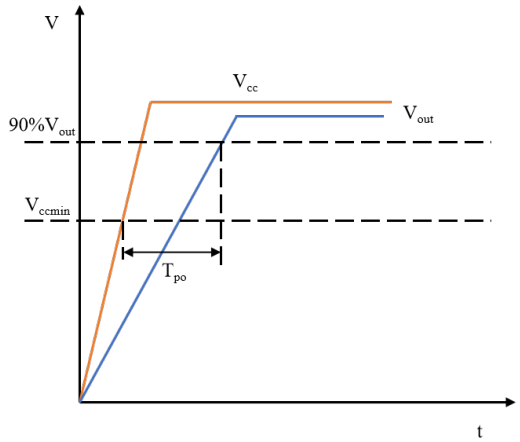

Figure 6.1 NSM2012 Power-on time

Rise time (T_r)

The time from 10% to 90% of the output signal is defined as the output rise time. For step input signals, there is such an approximate relationship between the rise time and bandwidth of the output signal: f(-3dB) = 0.35/T_r.

Propagation delay (T_{pd})

The time from 20% of the primary current to 20% of the output signal is defined as the output propagation delay time.

Response time ($T_{response}$)

The time from 90% of the primary current to 90% of the output signal is defined as the output response time.

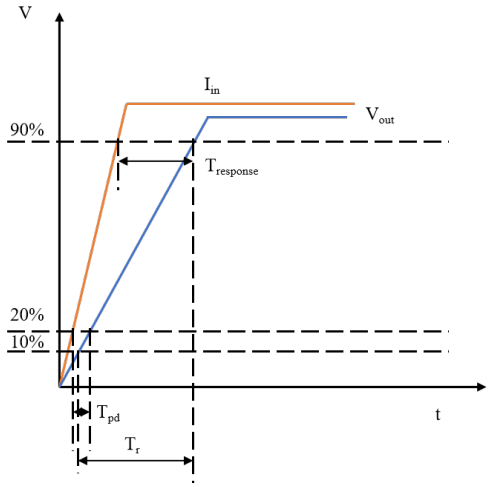

Figure 6.2 NSM2012 response time

Sensitivity/sensitivity error

Sensitivity is defined as the ratio of the output voltage proportional to the primary input current. Sensitivity is the slope of the curve in the figure below.

Copyright © 2025, NOVOSENSE

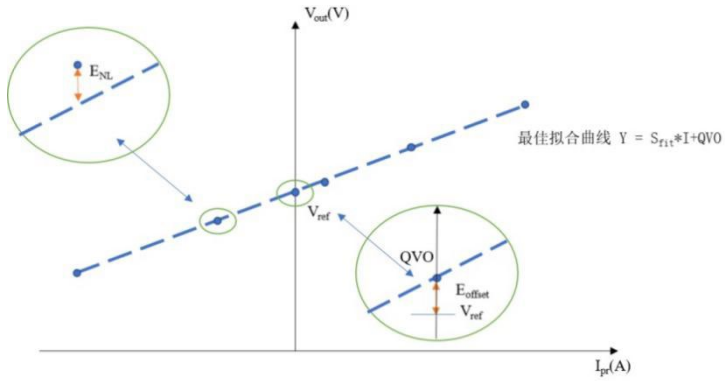

Figure 6.3 NSM2012 Sensitivity and error

The sensitivity error is defined as the deviation between the slope of the best-fit curve and the slope of the ideal curve. The slope of the best-fit curve comes from the measured value:

$$E_{sens} = \frac{(S_{fit} - S_{ideal})}{S_{ideal}} * 100\%$$

Offset error

The zero current output error is defined as the difference between the output voltage and the reference voltage when the primary current is 0A, V_{ref} here is VCC/2 or 0.1*VCC (R version):

$$E_{offset} = QVO - V_{ref}$$

Nonlinear error

The linearity error is defined as the error from the maximum deviation point of the best-fit curve to the full scale. The mathematical expression is as follows:

$$V_{NL} = V_{outmax} - (S_{fit} * I_{max} + QVO)$$

among them:

V_{outmax} is the output voltage furthest from the fitted curve;

I_{max} is the primary current farthest from the fitted curve;

Therefore, the nonlinear error can be mathematically expressed as the following formula:

$$E_{NL} = \frac{V_{NL}}{FS} * 100\%$$

Total error

The total error is defined as the error between the actual given current and the current measured by the chip, in other words, the difference between the actual output voltage and the ideal output voltage. It should be known that in different current ranges, the factors that dominate the total error are different. If it is under low current measurement, the zero point error is the main source of error; if under high current measurement, the total error caused by the zero point error is very small, and the dominant error is the sensitivity error.

$$E_{total}(I_{pr}) = \frac{V_{out_{ideal}}(I_{pr}) - V_{out}(I_{pr})}{FS}$$

Ratiometric output sensitivity error

The ratiometric output sensitivity error is defined as the error of the sensitivity change with the change of Vcc. In a perfectly ideal situation, when Vcc changes by 10%, the sensitivity should also change by 10%. The error is expressed by the following formula:

$$S_{ERR} = 100\,\% \times \{(S(Vcc)/S(5V)) - (Vcc/5)\}$$

Ratiometric output offset error

The offset error of the ratiometric output is defined as the error condition of the zero point change with the change of Vcc. In a perfectly ideal situation, the output zero point is Vcc/2, Vcc changes 10%, and the zero point should also change 10%. The error is expressed by the following formula:

$$V_{OUT0R} = 100\% \times \{(VOUT0(Vcc) / VOUT0(5V)) - (Vcc / 5)\}$$

7. Application Note

7.1. Typical Application Circuit

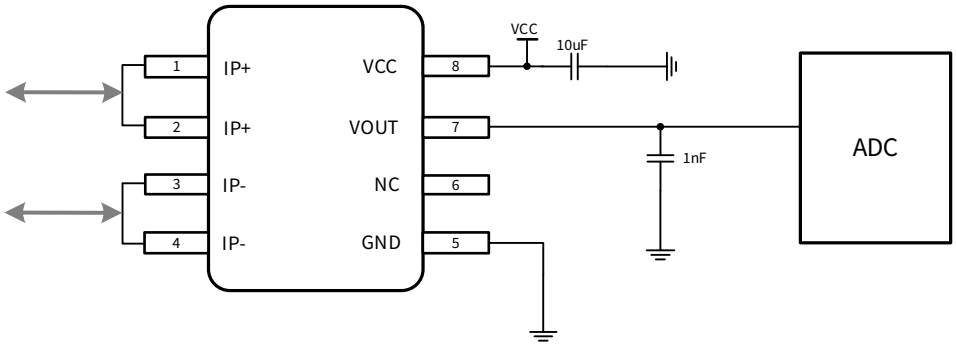

Figure 7.1 Typical application diagram of ratiometric output mode

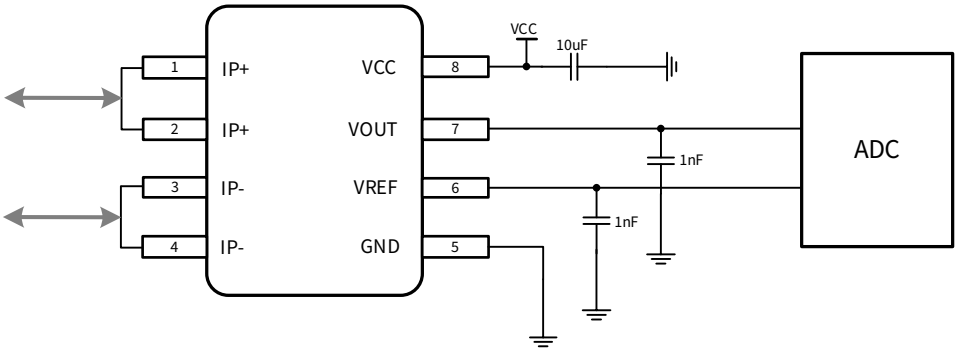

Figure 7.2 Typical Application Diagram of Fixed Output Mode

7.2. PCB Layout

For NSM2012 in current monitoring applications, a reasonable layout will make the system heat dissipation faster and better. The copper area on the NSM2012 Demo board is 380mm^2 (very small copper area is used to illustrate the worse situation, rather than a large copper area), the top layer and the bottom layer are 2oz copper thick. The reason why NSM2012 is better than competitors for heat dissipation is due to the use of packaging materials with better heat dissipation coefficients and a copper frame with better heat dissipation coefficients. If customers want to achieve better heat dissipation, they can use multi-layer boards and thicken the copper thickness to achieve it, and can use active heat dissipation solutions in the system, such as adding heat sinks and fans. If you need to use the NSM2012 Demo board to evaluate the performance of this current sensor, please contact NOVOSENSE sales team for support.

Copyright © 2025, NOVOSENSE

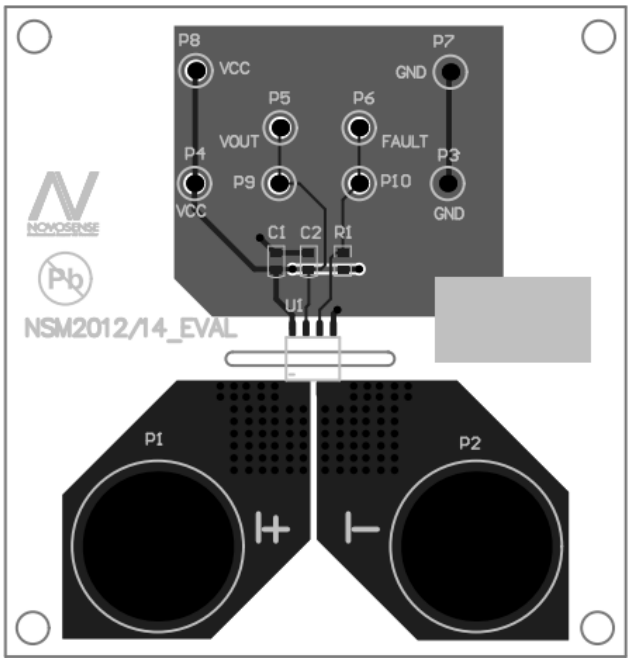

Figure 7.3 NSM2012 PCB Layout

7.3. Thermal Evaluation

The thermal evaluation experiment is tested at room temperature, which mainly illustrates the temperature rise of the NSM2012 current sensor under different currents. With these data and the above-mentioned layout guide, customers can design heat dissipation according to actual application requirements. The ambient temperature in this experiment is room temperature. The surface is mounted on the above Demo board for temperature rise test. There is no external active heat dissipation device (such as a fan, etc.). The relationship between junction temperature and time is measured. 20 minutes of temperature data are collected. Under normal circumstances, the temperature rise It is basically fixed in about 10 minutes, and the specific test data are as follows:

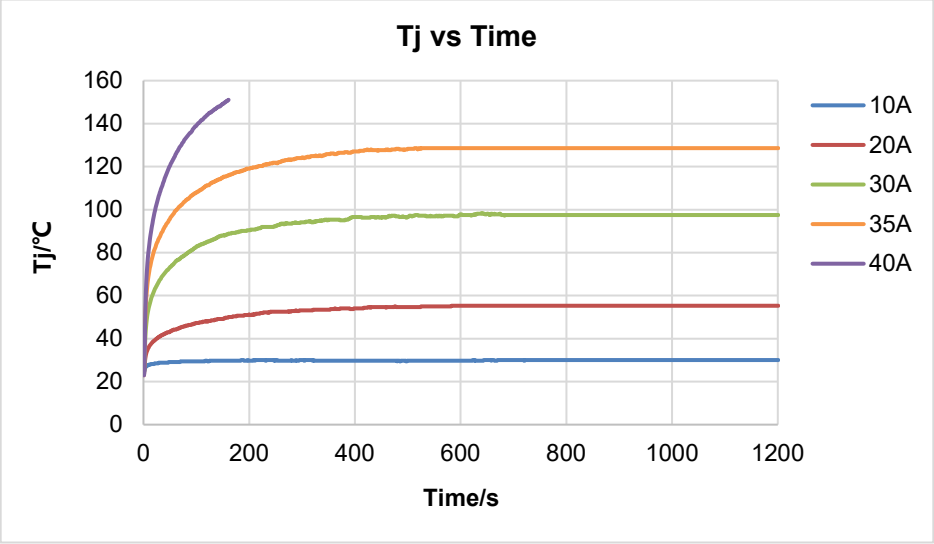

Figure 7.4 NSM2012 Junction temperature vs. Different continues current

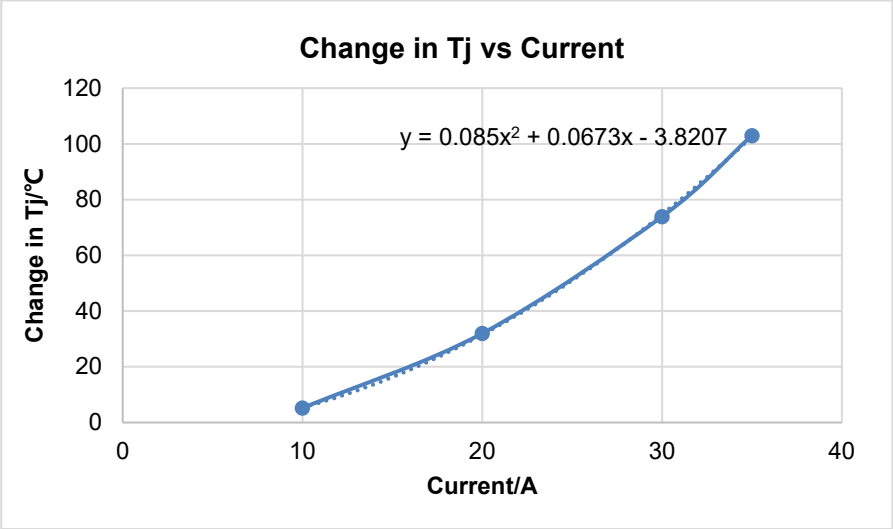

Figure 7.5 NSM2012 Estimation function of junction temperature at different currents (PCB is in worst case)

It is important to note that the above temperature rise experiment data is only based on the Demo board, in order to reflect the relationship between NSM2012 current and temperature in a worst case. Customers can reduce the temperature rise of Tj by increasing or thickening the copper area of the PCB, using multi-layer boards, or adding active heat dissipation devices such as fans (Tj<150°C). If customers compare NSM2012 with other competing products, please refer to the same PCB design instead of using specially designed PCB provided by competing products. NOVOSENSE can provide a 8-pin general-purpose Demo board for comparison of temperature rises of competing products.

Copyright © 2025, NOVOSENSE

8. Package Information

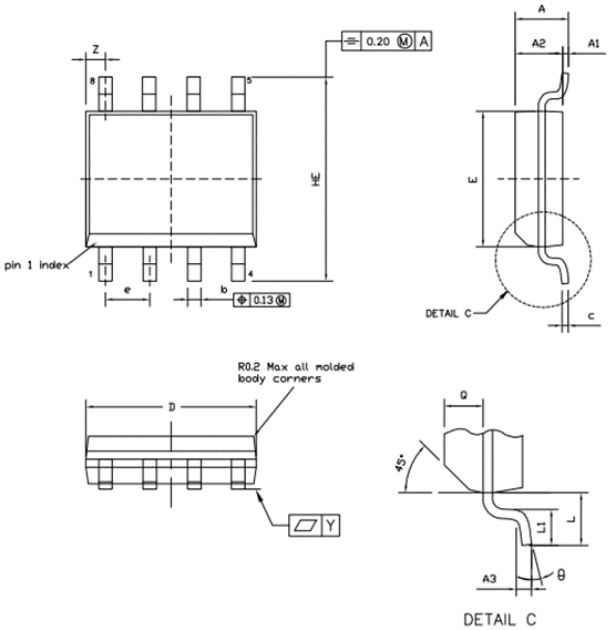

* CONTROLLING DIMENSION : MM

SYMBOL	MILLIMETER		
	MIN.	NOM.	MAX.
A	---	---	1.75
A1	0.10	---	0.25
A2	1.25	1.35	1.45
b	0.33	0.38	0.49
c	0.19	0.20	0.25
D	4.80	4.90	5.00
E	3.80	3.90	4.00
Q	0.60	0.65	0.70
HE	5.80	6.00	6.20
e	1.27 BSC		
L	1.05 BSC		
L1	0.40	0.64	1.00
Y	---	0.10	---
Z	0.3	0.5	0.7
A3	0.25 BSC		
θ	0°	5°	8°

Figure 8.1 SOIC8 Package Shape and Dimension in millimeters

9. Order Information

Part number	Primary current(A)	Power supply(V)	Sensitivity(mV/A)	MSL	MPQ	Package
NSM2012-02B3R-DSPR	±2	3.3	660	2	2.5k	SOIC8
NSM2012-02B5R-DSPR	±2	5	1000	2	2.5k	SOIC8
NSM2012-05B3F-DSPR	±5	3.3	264	2	2.5k	SOIC8
NSM2012-05B5R-DSPR	±5	5	400	2	2.5k	SOIC8
NSM2012-10B3R-DSPR	±10	3.3	132	2	2.5k	SOIC8
NSM2012-10B5F-DSPR	±10	5	200	2	2.5k	SOIC8
NSM2012-10B5R-DSPR	±10	5	200	2	2.5k	SOIC8
NSM2012-10U3R-DSPR	10	3.3	264	2	2.5k	SOIC8
NSM2012-10U5R-DSPR	10	5	400	2	2.5k	SOIC8
NSM2012-20B3F-DSPR	±20	3.3	66	2	2.5k	SOIC8
NSM2012-20B3R-DSPR	±20	3.3	66	2	2.5k	SOIC8
NSM2012-20B5F-DSPR	±20	5	100	2	2.5k	SOIC8
NSM2012-20B5R-DSPR	±20	5	100	2	2.5k	SOIC8
NSM2012-25B5F-DSPR	±25	5	80	2	2.5k	SOIC8
NSM2012-25B5R-DSPR	±25	5	80	2	2.5k	SOIC8
NSM2012-30B3R-DSPR	±30	3.3	44	2	2.5k	SOIC8
NSM2012-30B5F-DSPR	±30	5	66.67	2	2.5k	SOIC8
NSM2012-30B5R-DSPR	±30	5	66.67	2	2.5k	SOIC8
NSM2012-30U5R-DSPR	30	5	133.3	2	2.5k	SOIC8
NSM2012-40B3R-DSPR	±40	3.3	33	2	2.5k	SOIC8
NSM2012-40B5R-DSPR	±40	5	50	2	2.5k	SOIC8
NSM2012-50B3R-DSPR	±50	3.3	26.4	2	2.5k	SOIC8
NSM2012-50B5F-DSPR	±50	5	40	2	2.5k	SOIC8
NSM2012-50B5R-DSPR	±50	5	40	2	2.5k	SOIC8
NSM2012-50U5F-DSPR	50	5	80	2	2.5k	SOIC8
NSM2012-65B5R-DSPR	±65	5	30.77	2	2.5k	SOIC8

Copyright © 2025, NOVOSENSE

Naming rules：

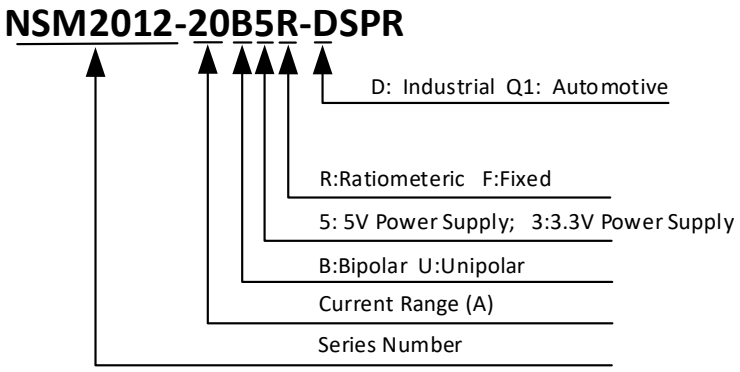

10. Tape and Reel Information

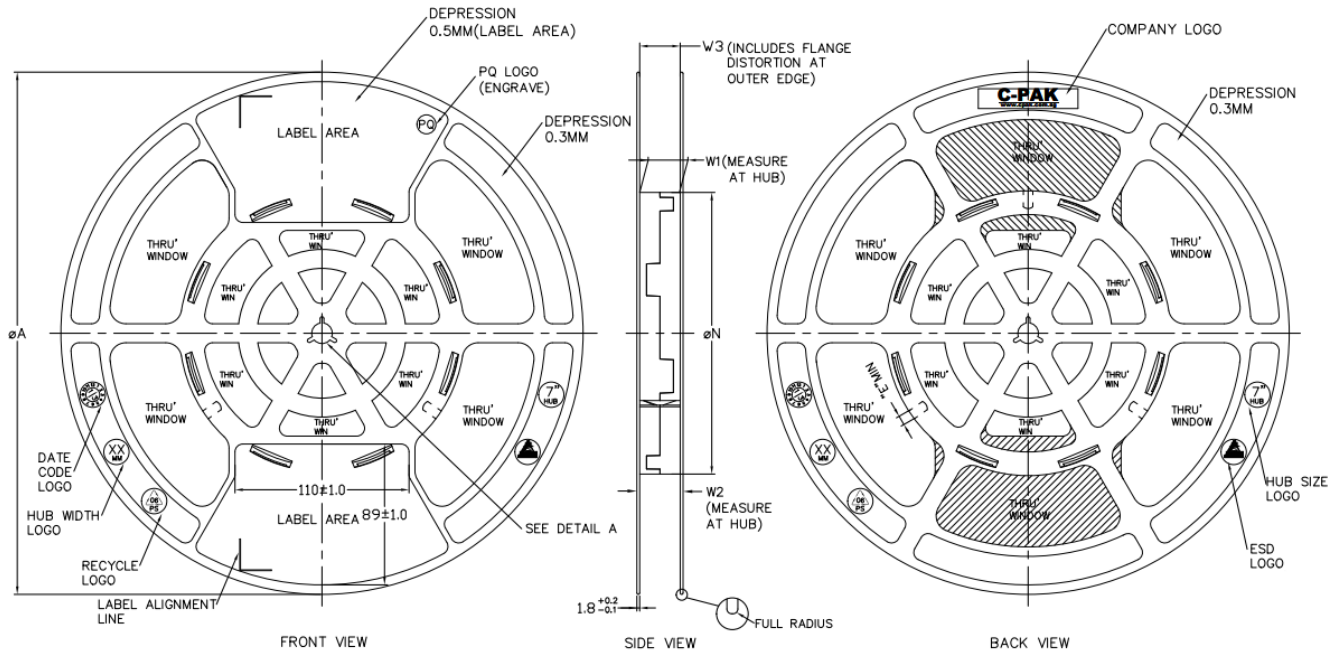

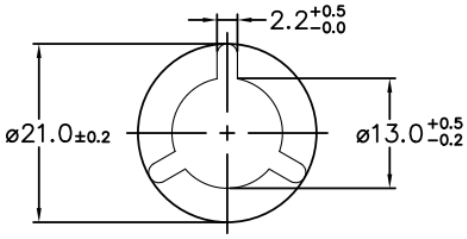

ARBOR HOLE
DETAIL A
SCALE : 3:1

PRODUCT SPECIFICATION						
TAPE WIDTH	øA ±2.0	øN ±2.0	W1	W2 (MAX)	W3	E (MIN)
08MM	330	178	8.4 +1.5 −0.0	14.4	SHALL ACCOMMODATE TAPE WIDTH WITHOUT INTERFERENCE	5.5
12MM	330	178	12.4 +2.0 −0.0	18.4		5.5
16MM	330	178	16.4 +2.0 −0.0	22.4		5.5
24MM	330	178	24.4 +2.0 −0.0	30.4		5.5
32MM	330	178	32.4 +2.0 −0.0	38.4		5.5

SURFACE RESISTIVITY			
LEGEND	SR RANGE	TYPE	COLOUR
A	BELOW 10^{12}	ANTISTATIC	ALL TYPES
B	10^{6} TO 10^{11}	STATIC DISSIPATIVE	BLACK ONLY
C	10^{5} & BELOW 10^{5}	CONDUCTIVE (GENERIC)	BLACK ONLY
E	10^{9} TO 10^{11}	ANTISTATIC (COATED)	ALL TYPES

Note: MPQ(SOP8):2.5K

Copyright © 2025, NOVOSENSE

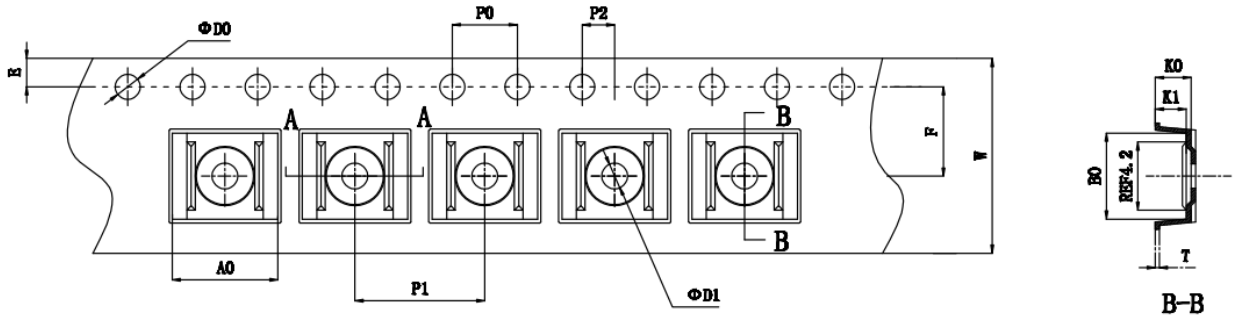

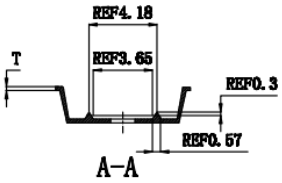

Symbol	Spec (mm)
E	1.75±0.10
F	5.5±0.10
P2	2.00±0.10
D0	1.55±0.05
D1	1.6±0.10
P0	4.00±0.10
10P0	40.00±0.20

Symbol	Spec (mm)
W	12.00±0.30
P1	8.00±0.10
A0	6.50±0.10
B0	5.30±0.10
K0	2.20±0.10
K1	1.90±0.10
T	0.30±0.05

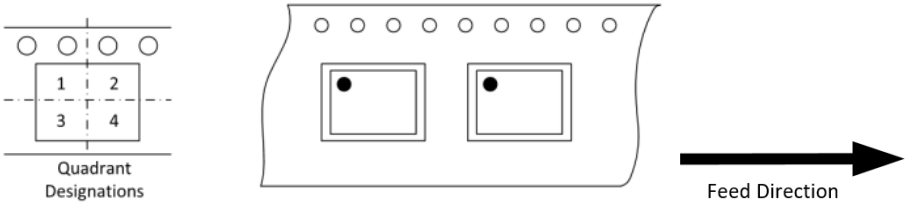

Figure 10.1 Tape and Reel Information of SOP8

11. Revision History

Revision	Description	Date
1.0	Released 1.0 Version	2021/10/19
1.1	Add tape and reel information	2021/10/26
1.2	(a) Changed ESD description according to new template (b) Update part-number in chapter 5.2~5.27 and order information in chapter 9 (c) Add MSL information (d) Add MPQ in order information (e) Update the Data curve in chapter 5.28	2024/9/10

Copyright © 2025, NOVOSENSE

IMPORTANT NOTICE

The information given in this document (the “Document”) shall in no event be regarded as any warranty or authorization of, express or implied, including but not limited to accuracy, completeness, merchantability, fitness for a particular purpose or infringement of any third party’s intellectual property rights.

Users of this Document shall be solely responsible for the use of NOVOSENSE’s products and applications, and for the safety thereof. Users shall comply with all laws, regulations and requirements related to NOVOSENSE’s products and applications, although information or support related to any application may still be provided by NOVOSENSE.

This Document is provided on an “AS IS” basis, and is intended only for skilled developers designing with NOVOSENSE’s products. NOVOSENSE reserves the rights to make corrections, modifications, enhancements, improvements or other changes to the products and services provided without notice. NOVOSENSE authorizes users to use this Document exclusively for the development of relevant applications or systems designed to integrate NOVOSENSE’s products. No license to any intellectual property rights of NOVOSENSE is granted by implication or otherwise. Using this Document for any other purpose, or any unauthorized reproduction or display of this Document is strictly prohibited. In no event shall NOVOSENSE be liable for any claims, damages, costs, losses or liabilities arising out of or in connection with this Document or the use of this Document.

For further information on applications, products and technologies, please contact NOVOSENSE (www.novosns.com).

Suzhou NOVOSENSE Microelectronics Co., Ltd

Copyright © 2025, NOVOSENSE