**XL-HD2835UVA2S-A2** 技术数据表 **Technical Data Sheet**

# 2835 球头 紫光 365+395 1W 贴片式发光二极管

模型图仅供参考

## 特点（Characteristics）：

＊ 外观尺寸（L/W/H）:2.8*3.5*1.7mm

Outline Dimensions (L / w / h): 2.8*3.5*1.7 mm

＊ 发光颜色及胶体: 高亮度紫色/透明胶体

Luminous color and colloid: high brightness purple/ transparent colloid

＊ 环保工艺符合 ROHS 要求

Environmental protection products Complied With RoHS Directive

＊ 湿气敏感性等级（MSL）:3 级

Moisture sensitivity level（MSL）: 3 levels

＊ EIA 规范标准包装

EIA standard packaging

＊ 适用于 SMT 自动化贴片机

Suitable for SMT automatic production

＊ 适用于回流焊制程

Suitable for reflow soldering process

## 应用领域（Product application）：

＊ 杀毒消菌

Disinfect toxin and bacteria

＊ 空气和水净化

Air and water purification

＊ 紫外探测与通讯技术

Ultraviolet detection and communication technology

＊ 食品加工保鲜、食品饮料的包装，生鲜储存等

Food processing and preservation, packaging of food and beverage, fresh storage, etc

＊ 医疗卫生，皮肤病治疗等

Medical health, skin disease treatment, etc

# 目录

## Catalogue

**电性参数**
**Electrical Characteristics.....3**

**典型特性曲线**
**Typical Characteristic Curves.....5**

**可靠性实验**
**Reliability Test Items And Conditions.....6**

**外形尺寸**
**Outline Dimensions.....7**

**包装**
**Packaging.....8**

**焊接指导**
**Guideline for Soldering.....10**

**使用注意事项**
**Precautions.....12**

# 电性参数

Electrical Characteristics

## 极限参数（Ta=25℃）Absolute Maximum Rating（ta=25 ℃）

| 参数名称<br>Parameter | 符号<br>Symbol | 数值<br>Rating | 单位<br>Unit |
|---|---|---|---|
| 消耗功率<br>（Power Dissipation） | Pd | 0.5*2=1.0 | W |
| 最大正向电流<br>（Max Continuous Forward Current） | IF | 150 | mA |
| 顺向脉冲电流<br>Pulsed Forward Current<br>(1/10Duty Cycle, 0.1msPulsewidth） | IFP | 600 | mA |
| 反向电压<br>（Reverse Voltage） | VR | 5 | V |
| 静电<br>（Electrostatic Discharge ）(HBM) | ESD | 2000 | V |
| 操作温度<br>（Operating Temperature） | Topr | -20～+85 | ℃ |
| 存储温度<br>（Storage Temperature） | Tstg | -40～+85 | ℃ |
| 结温<br>(Junction Temperature) | Tj | ≤115 | ℃ |

## 光电参数 （Ta=25℃） Optical-electrical parameter（ta=25 ℃）

| 项目参数<br>Parameter | 符号<br>Symbol | 最小值<br>Min. | 一般值<br>Typ. | 最大值<br>Max. | 单位<br>Unit | 测试条件<br>Test conditions |
|---|---|---|---|---|---|---|
| 辐射功率<br>（Radiation Flux） | Φe | 180 | / | 300 | mW | IF=120mA |
| 峰值波长<br>（Peak Wave Length） | λp | / | 365 | / | nm | IF=120mA |
| | | / | 395 | / | | IF=120mA |
| 正向电压<br>（Forward Voltage） | VF | 6.4 | / | 7.6 | V | IF=120mA |
| 发光角度<br>（Viewing Angle） | 2θ1/2 | / | 120 | / | deg | IF=120mA |
| 半波宽<br>Half wave width | Δλ | / | 12 | / | nm | IF=120mA |
| 反向电流<br>（Reverse Current） | IR | / | / | ≤10 | μA | VR=5V |

**亮度分档:**
**Brightness grading:**

| 代码<br>Code | 最小值<br>Min | 最大值<br>Max | 单位<br>Unit | 测试条件<br>Test conditions |
|---|---|---|---|---|
| P2-6 | 180 | 220 | mw | IF=120mA |
| P2-7 | 220 | 300 | | |

**电压分档:**
**Voltage grading:**

| 代码<br>Code | 最小值<br>Min | 最大值<br>Max | 单位<br>Unit | 测试条件<br>Test conditions |
|---|---|---|---|---|
| R31-6 | 6.4 | 7.0 | V | IF=120mA |
| R32-6 | 7.0 | 7.6 | | |

**波长分档:**
**Wavelength grading:**

| 代码<br>Code | 最小值<br>Min | 最大值<br>Max | 单位<br>Unit | 测试条件<br>Test conditions |
|---|---|---|---|---|
| SZ03 | 365 | 370 | nm | IF=120mA |
| SZ04 | 370 | 375 | | |
| SZ05 | 390 | 395 | | |
| SZ06 | 395 | 400 | | |

# 典型特性曲线

## Typical Characteristics Curves

光谱分布曲线
Relative Spectral Distrbution

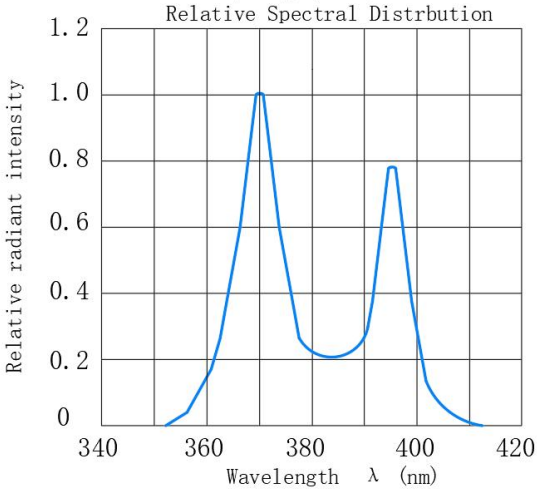


伏安特性
Volt ampere characteristic

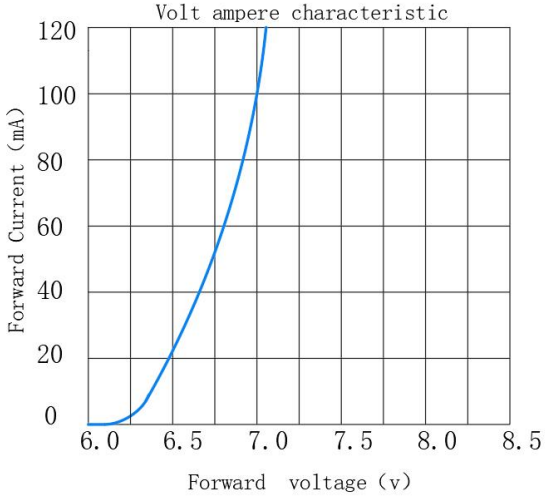


光强与环境温度曲线
Luminous Intensity VS Ambient Temperature

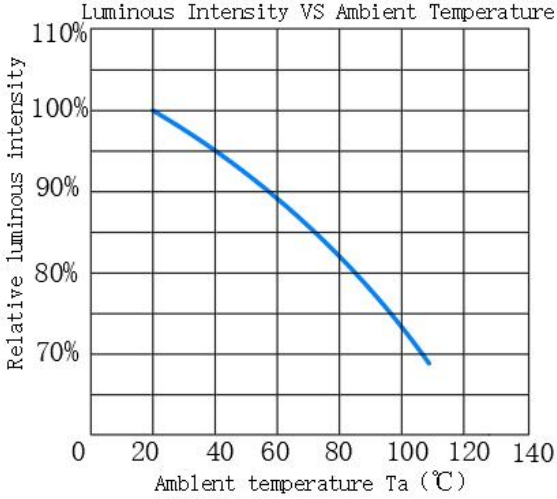


相对光强与正向电流特性
Relative Luminous VS Forward Current

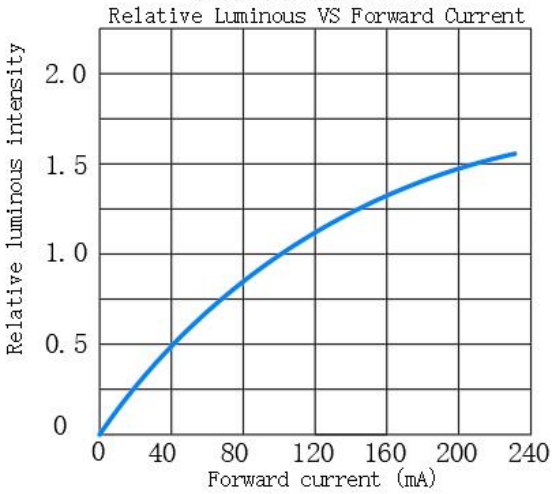


相对辐射强度与空间角度关系
Radiation diagram

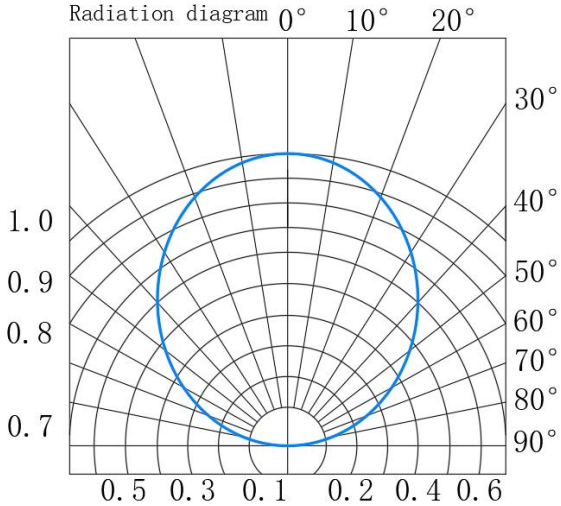


注：如无另外注明，测试环境温度为 25±5℃/Note：If not otherwise indicated the test environment temp erature is 25±5℃

## 可靠性试验

**Reliability Test Items And Conditions**

| 测试项目<br>Test items | 参考标准<br>Reference standard | 测试条件<br>Test conditions | 时间<br>Time | 数量<br>Quantity | 接收/拒收<br>Ac/Re |
|---|---|---|---|---|---|
| 回流焊<br>Reflow | IEC/TR<br>60068-3-12-2014 | Temp:260°C<br>max T=8 sec | 3 times | 22PCS | 22PCS 0/1 |
| 温度循环<br>Temperature Cycle | IEC60068-2-<br>14 : 2009 | 120°C±5°C 30min<br>↑↓5 min<br>-40°C±5°C 30min | 100Cycles | 22PCS | 22PCS 0/1 |
| 高温高湿老化测试<br>High Humidity Heat Life Test | IEC60068-2-78:<br>2001 | Ta=85°C<br>RH=85%<br>IF=150mA | 1000H | 22PCS | 22PCS 0/1 |
| 高温储存<br>High Temperature Storage | Tested with<br>yuliang<br>standard | Temp:85°C±5°C | 1000H | 22PCS | 22PCS 0/1 |
| 低温储存<br>Low Temperature Storage | IEC60068-2-1:<br>2007 | Temp:-30°C±5°C | 1000H | 22PCS | 22PCS 0/1 |
| 常温通电老化<br>Life Test | Tested with yuliang<br>standard | Ta=25°C±5°C<br>IF=150mA | 1000H | 22PCS | 22PCS 0/1 |

**失效判定标准 Failure Criteria**

| 项目<br>Test items | 符号<br>Symbol | 测试条件<br>Test conditions | 判定标准 Failure Criteria | |
|---|---|---|---|---|
| | | | 最小（MIN） | 最大（MAX） |
| 正向电压<br>Forward voltage | VF | IF=150mA | --- | U.S.L*)x1.1 |
| 反向电流<br>Reverse current | VF | VR = 5V | --- | 1uA |
| 光通量<br>Luminous flux | lm | IF=150mA | L.S.L*)x0.7 | --- |

## 外形尺寸

**Outline Dimension**

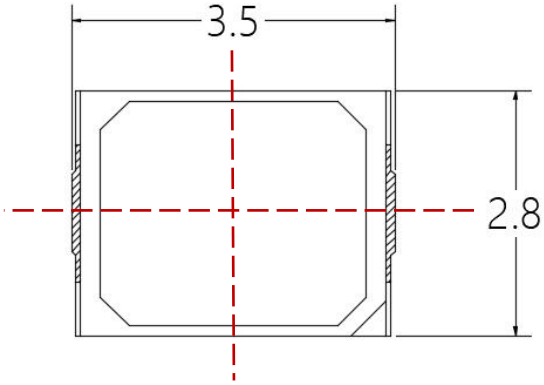


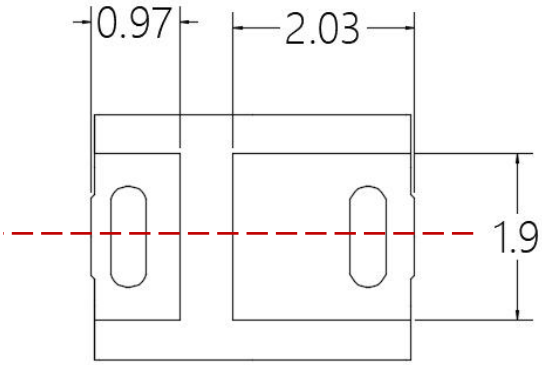


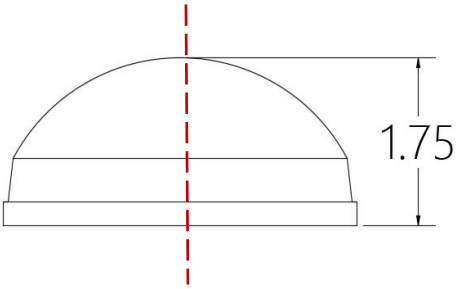


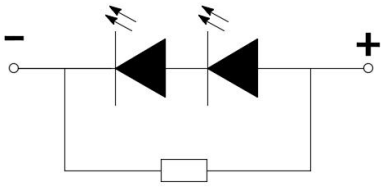


极性
Polarity

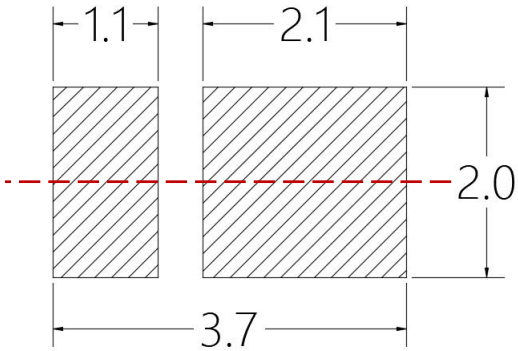


建议焊盘尺寸
Recommended Soldering Pattern

备注： 1. 以上尺寸单位均为 mm
Remarks: All dimensions are in millimeters.

2. 未特别标注公差的尺寸公差均为±0.25mm
Tolerance is ±0.25mm unless otherwise noted

# 包装（1）

## Packaging (1)

**载带与圆盘尺寸 Belt and disk dimensions**

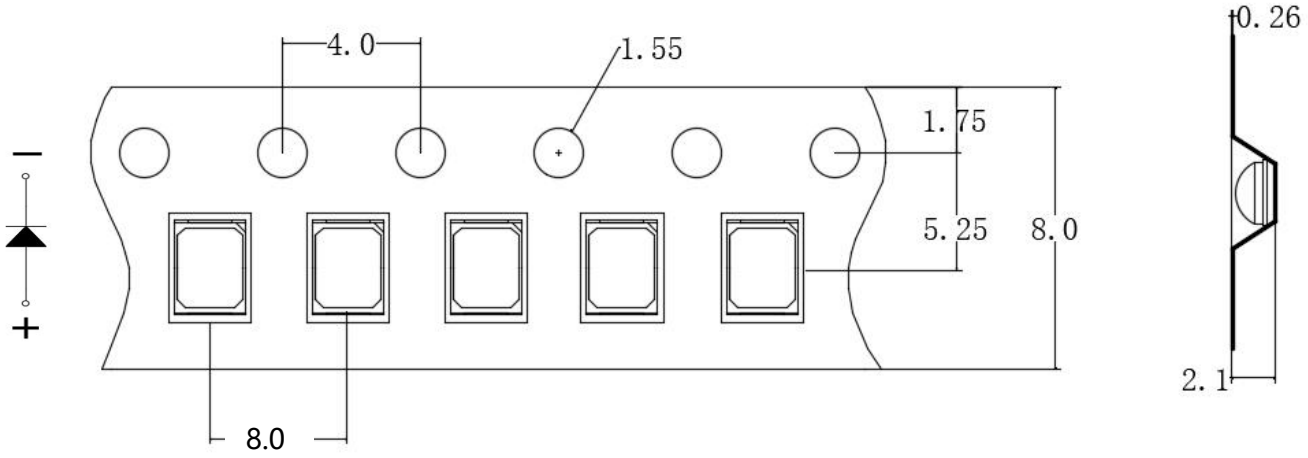


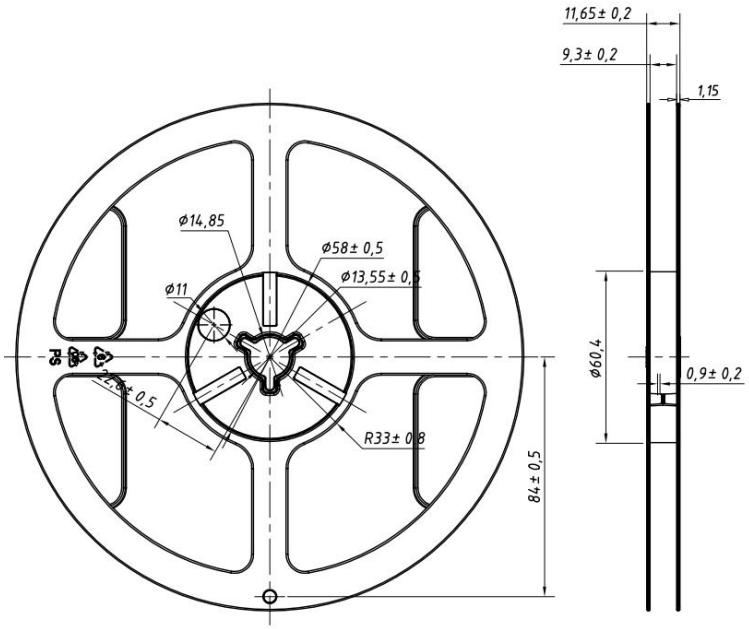


注:

1. 尺寸单位为毫米(mm)。
1. Size unit is mm (mm).
2. 尺寸公差是±0.1mm。
2. The dimensional tolerance is ± 0.1mm.

✧ **圆盘及载带卷出方向及空穴规格 Disk and carrier belt direction of roll and hole dimensions**

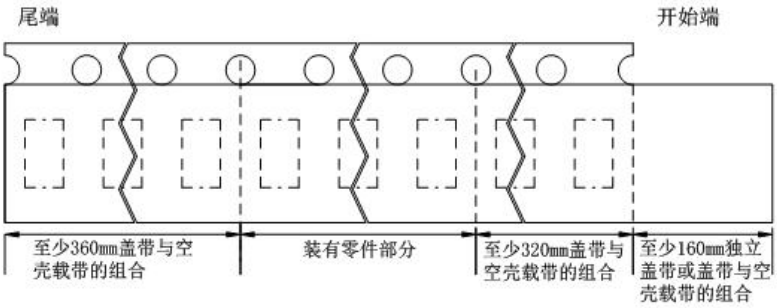


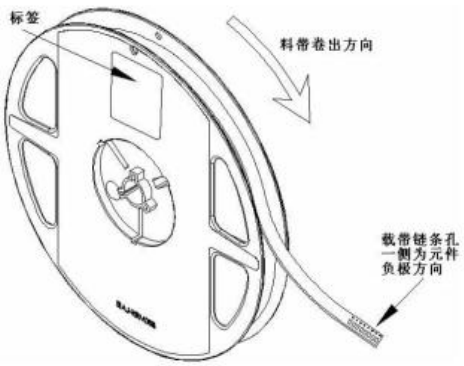

# 包装（2）

Packaging (2)

## ◇ 防潮抗静电包装 Moisture Proof and Antti-Electrostic Foil Bag

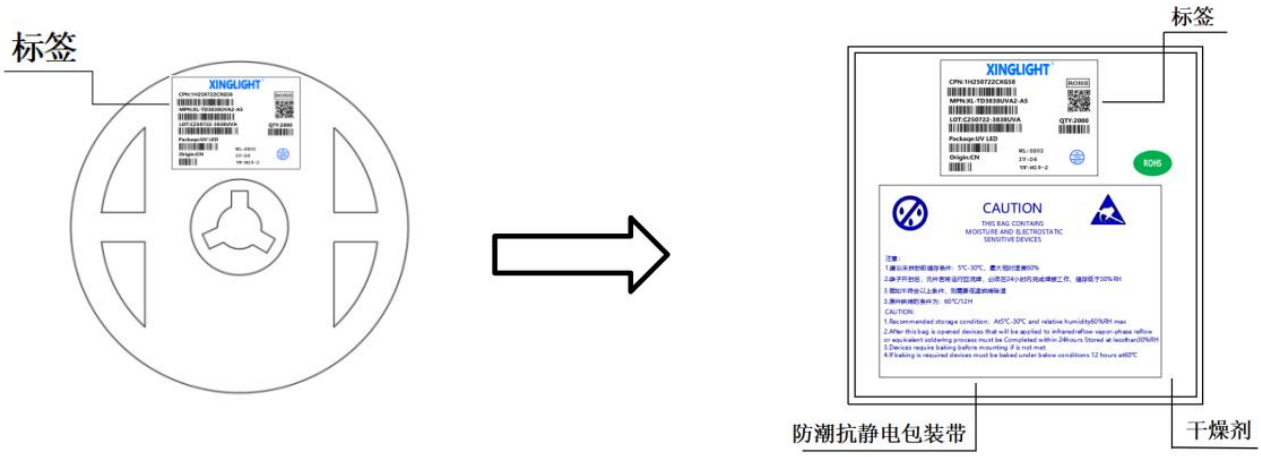


## ◇ 外包装箱 Cardboard Box

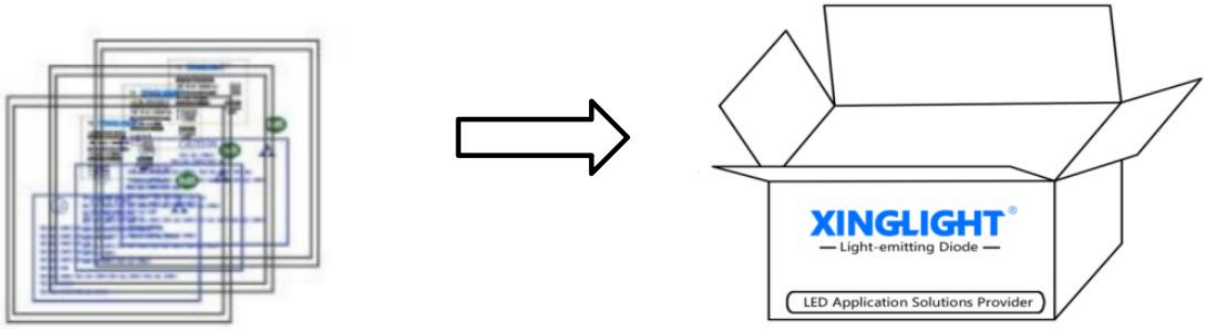


## ◇ 标签说明 Label Expantion

CPN：批号/档位　　LOT：日期/封装颜色

MPN：型号　　VF：电压代码

WL：波长代码　　IV：亮度代码

ORIGIN：产地　　QTY：数量

PACKAQE：封装

# 焊接指导（1）

## Guideline for Soldering (1)

**1. 使用烙铁人手焊接**

**Hand Soldering**

只建议在修理和重工的情况下使用手工焊接；推荐使用功率低于 30W 的烙铁，焊接时烙铁的温度必须保 持在 300℃以下，且每个电极只能进行一次焊接，每次焊接的持续时间不得超过 3 秒。

人手焊接过程中的不慎操作易引起 LED 产品的损坏，应当小心谨慎。

Manual welding is recommended only for repair and heavy industry situations. A soldering iron of less than 30W is recommended to be used in Hand Soldering. Please keep the temperature of the soldering iron under 300℃ while soldering. Each terminal of the LED is to go for less than 3 second and for one time only.

Be careful because the damage of the product is often started at the time of the hand soldering.

**2. 回流焊接：** 推荐使用以下无铅回流焊接温度图进行。

**Reflow Soldering:** Use the conditions shown in the under Figure of Pb -Free Reflow Soldering.

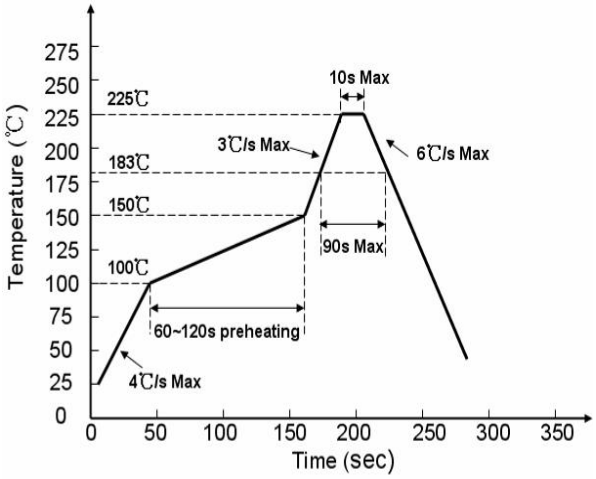


有铅制程 Lead process

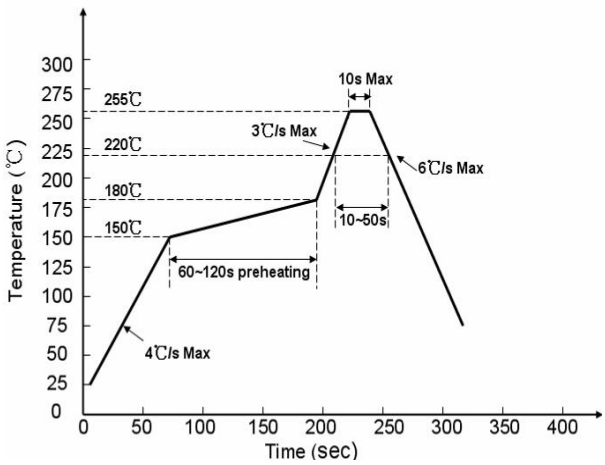


无铅制程 lead free

回流焊接最多只能进行两次。

Reflow soldering should not be done more than two times.

在回流焊接升温过程中，请不要对 LED 施加任何压力。

Stress on the LEDs should be avoided during heating in soldering process.

在焊接完成后，待产品温度下降到室温之后，再进行其他处理。

After soldering, do not deal with the product before its temperature drop down to room temperature.

产品最佳的最高焊接温度建议控制在 240±5℃/6S

The recommended maximum welding temperature for the product is 240±5 °C/6s

# 焊接指导（2）

## Guideline for Soldering (2)

**3. 清洗：**

**Cleaning**

在焊接后推荐使用酒精进行清洗，在温度不高于 30℃的条件下持续 3 分钟， 不高于 50℃的条件下持续 30 秒。

使用其他类似溶剂清洗前，请先确认使用的溶剂不会对 LED 的封装和环氧树脂部分造成损伤。超声波清洗也是有效的方法，一般最大功率不应超过 300W，否则可能对 LED 造成损伤。请根据具体的 情况预先测试清洗条件是否会对 LED 造成损伤。

It is recommended that alcohol be used as a solvent for cleaning after soldering. Cleaning is to go under 30℃ for 3 minutes or 50℃ for 30 seconds. When using other solvents, it should be confirmed beforehand whether the solvents will dissolve the package and the resin or not.

Ultrasonic cleaning is also an effective way for cleaning. But the influence of Ultrasonic cleaning on LED depends on factors such as ultrasonic power. Generally, the ultrasonic power should not be higher than 300W. Before cleaning, a pretest should be done to confirm whether any damage to LEDs will occur.

* **注意：** 此一般指导原则并不适用于所有 PCB 设计和焊接设备的配置。具体工艺受到诸多因素的影响， 请根据特定的 PCB 设计和焊接设备来确定焊接方案。

* **Note:** This general guideline may not apply to all PCB designs and configurations of all soldering equipment. The technics in practise is influenced by many factors, it should be specialized base on the PCB designs and configurations of the soldering equipment..

## 使用注意事项（1）

**Precautions (1)**

**1. 贮存：**

**Storage**

• 本产品使用密封防潮抗静电袋包装，并附有干燥剂，未开封的产品有一年的保存时间。

Moisture proof and anti-electrostatic package with moisture absorbent material is used, to keep moisture to a minimum.

• 开封前，产品须存放在温度不高于 30℃，湿度不高于 60%RH 的环境中。

Before opening the package, the product should be kept at 30℃ or less and humidity less than 60% RH, and be used within a year.

• 开封后，产品须存放在温度不高于 30℃，湿度不高于 10%RH 的环境中，且应该在 168 小时（7 天） 内使 用完。建议工作环境为温度不高于 30℃，湿度不高于 60%RH。

After opening the package, the product should be stored at 30℃ or less and humidity less than 10%RH, and be soldered within 168 hours (7 days). It is recommended that the product be operated at the workshop condition of 30℃ or less and humidity less than 60%RH.

• 对于尚未焊接的 LED，如果吸湿剂或包装失效，或者产品没有符合以上有效存储条件，烘焙可以起到一定的性能恢复效果。烘焙条件：60±5）℃，持续24 小时。

If the moisture absorbent material has fade away or the LEDs have exceeded the storage time, baking treatment should be performed based on the following condition: (60±5)℃ for 24 hours.

**2. 静电：**

**Static Electricity**

静电和电涌会导致产品特性发生改变，例如正向电压降低等，如果情况严重甚至会损毁产品。所以在使用时必须采取有效的防静电措施。所有相关的设备和机器都应该正确接地，同时必须采取其他防止静电和电涌的措施。使用防静电手环，防静电垫子，防静电工作服、工作鞋、手套，防静电容器，都是有效的防止静电和电涌的措施。

Static electricity or surge voltage damages the LEDs. Damaged LEDs will show some unusual characteristic such as the forward voltage becomes lower, or the LEDs do not light at the low current. even not light.

All devices, equipment and machinery must be properly grounded. At the same time, it is recommended that wrist bands or anti-electrostatic gloves, anti-electrostatic containers be used when dealing with the LEDs.

## 使用注意事项（2）

**Precautions (2)**

**3. 设计建议：**

**Design Consideration**

设计电路时，通过 LED 的电流不能超过规定的最大值，同时，还需使用保护电阻，否则，微小的电压变 化将会引起较大的电流变化，可能导致产品损毁。

建议使用以下（A）电路，该电路能够很好的调节通过每个 LED 的电流； 不推荐使用（B）电路，该电路 在持续的电压驱动下，LED 的正向电压（$V_F$ ）发生变化，电流会随之而发生变化，可能使某些 LED 承受高于规定的电流值。

In designing a circuit, the current through each LED must not exceed the absolute maximum rating specified for each LED. In the meanwhile, resistors for protection should be applied, otherwise slight voltage shift will cause big current change, burn out may happen.

It is recommended to use Circuit A which regulates the current flowing through each LED rather than Circuit B. When driving LEDs with a constant voltage in Circuit B, the current through the LEDs may vary due to the variation in Forward Voltage ($V_F$) of the LEDs. In the worst case, some LED may be subjected to stresses in excess of the Absolute Maximum Rating.

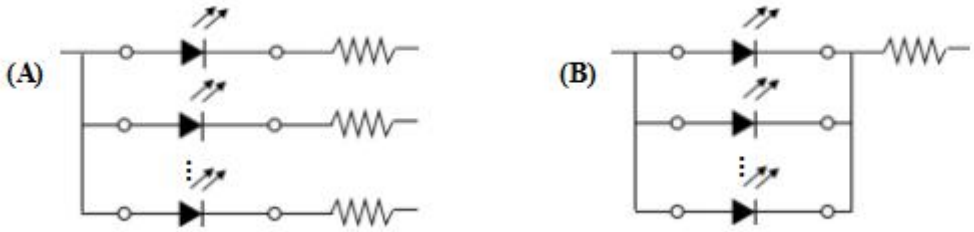


LED 的特性容易因为自身的发热和环境的温度的改变而发生改变。温度的升高会降低 LED 的发光效率、影响发光颜色等，所以在设计时应充分考虑散热的问题。

Thermal Design is paramount importance because heat generation may result in the Characteristics decline, such as brightness decreased, Color changed and so on. Please consider the heat generation of the LEDs when making the system design.

## 使用注意事项（3）

**Precautions (3)**

**4. 其他事项：**

**Others**

直接用手拿取产品不但会污染封装树脂表面，也可能由于静电等因素导致产品性能的改变。过度的压力也可能直接影响封装内部的管芯和金线，因此请勿对产品施加过度压力，特别当产品处于高温状态下，例如在回流焊接过程中。

When handling the product, touching the encapsulant with bare hands will not only contaminate its surface, but also affect on its optical characteristics. Excessive force to the encapsulant might result in catastrophic failure of the LEDs due to die breakage or wire deformation. For this reason, please do not put excessive stress on LEDs, especially when the LEDs are heated such as during Reflow Soldering.

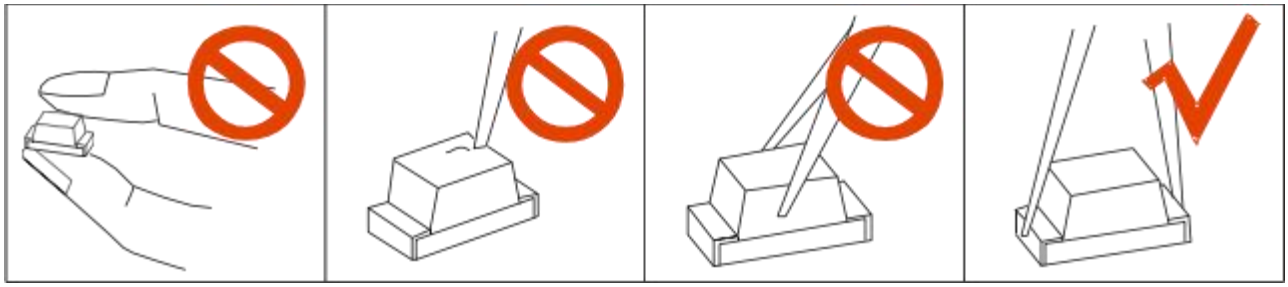

LED 的环氧树脂封装部分相当脆弱，请勿用坚硬、尖锐的物体刮、擦封装树脂部分。在用镊子夹取的时候也应当小心注意。

The epoxy resin of encapsulant is fragile, so please avoid scratch or friction over the epoxy resin surface. While handling the product with tweezers, do not hold by the epoxy resin, be careful.

**5. 眼睛保护忠告：**

**Safety Advice For Human Eyes**

LED 发光时，请勿直视发光光源，特别是对于一些光强较高的 LED，强光可能伤害你的眼睛。

Viewing direct to the light emitting center of the LEDs, especially those of great Luminous Intensity, will cause great hazard to human eyes. Please be careful.