6070 球头冰蓝 耐高温 3W

模型图仅供参考
The model diagram is for reference only

特点（Characteristics）：

- 外观尺寸（L/W/H）:8.0*14.5*5.1mm
  Outline Dimensions（L/W/H）:8.0*14.5*5.1mm
- 发光颜色及胶体: 冰蓝光/透明胶体
  Luminous color and colloid:ice blue light/water colloid
- 环保工艺符合 ROHS 要求
  Environmental protection products Complied With ROHS Directive
- 湿气敏感性等级（MSL）:3 级
  Moisture sensitivity level（MSL）: 3 levels
- EIA 规范标准包装
  EIA standard packaging
- 适用于 SMT 贴片自动化生产
  Suitable for SMT automatic production
- 适用于红外线回流焊制程
  Suitable for infrared reflow soldering process

应用领域（Product application）：

- 建筑照明灯、洗墙灯、投光灯
  Building lighting,wall washing,and projection lights
- 城市亮化照明、雕塑照明
  Urban lighting,sculpture lighting
- 舞台灯、广告牌照明
  stage lights,billboard lighting
- 展览展示、体育场馆、商场
  Exhibition,sports venues,shopping malls
- 公共交通
  mass transit

目录

Catalogue

电性参数
Electrical Characteristics.....3

分 BIN 规格
Bin Structures.....4

典型特性曲线
Typical Characteristic Curves.....5

可靠性实验
Reliability Test Items And Conditions.....6

外形尺寸
Outline Dimensions.....7

包装
Packaging.....8

焊接指导
Guideline for Soldering.....10

使用注意事项
Precautions.....12

电性参数

Electrical Characteristics

1.极限参数（Ta=25℃） Absolute Maximum Rating(ta=25 ℃)

项目参数 Parameter	符号 Symbol	数值 Value	单位 Unit
最大功耗 Max Power Dissipation	PD	3.0	W
最大正向电流 Max Continuous Forward Current	IF	700	mA
最大脉冲峰值电流 Peak Forward Current	IFP	2.8	A
最大反向电压 Max Reverse Voltage	VR	5	V
工作环境 Operating Temperature Range	TOPR	-30 ~ +85	℃
储存温度 Storage Temperature Range	TSTR	-40 ~ +85	℃
焊接条件 Welding conditions	TSOL	260℃≤6S	/

* 注： 脉冲宽度≤0. 1ms ， 占空比≤1/10 Note: Pulse width≤0. 1ms, Duty≤1/10

2.光电参数 （Ta=25℃） Optical-electrical parameter(ta=25 ℃)

项目参数 Parameter	符号 Symbol	最小值 Min.	一般值 Typ.	最大值 Max.	单位 Unit	测试条件 Test conditions
正向电压 Forward Voltage	VF	2.8	/	3.4	V	IF=700mA
光通量 Luminous Intensity	Φ	110	-	150	LM	IF=700mA
色温 Color temperature	TC	17000	/	33000	K	IF=700mA
发光角度 Viewing Angle	2θ1/2	-	120	-	deg	IF=700mA
反向电流 Reverse Current	IR	-	-	10	μA	VR=5V

*注 ： 光通量偏差±10%; Note: the light flux error is 10%;
电压偏差±0.1V; The pressure drop error is ±0.1V;
色温偏差±1%; The light color temperature error is 1%;

分 BIN 规格

Bin Structures

亮度分档:
Brightness grading:

代码 Code	最小值 Min	最大值 Max	单位 Unit	测试条件 Test conditions
K4	110	120	LM	IF=700mA
K5	120	130		
K6	130	140		
K7	140	150		

电压分档:
Voltage grading:

代码 Code	最小值 Min	最大值 Max	单位 Unit	测试条件 Test conditions
N13-3	2.8	3.0	V	IF=700mA
N13-4	3.0	3.2		
N13-5	3.2	3.4		

色温分档:
Color Temperature grading:

代码 Code	最小值 Min	最大值 Max	单位 Unit	测试条件 Test conditions
CW12-CW13	17000	18000	K	IF=700mA
CW13-CW14	18000	19000		
CW14-CW15	19000	20000		
CW15-CW16	20000	23000		
CW16-CW17	23000	25000		
CW17-CW18	25000	27000		
CW18-CW19	27000	30000		
CW19-CW20	30000	33000		

典型特性曲线

Typical Characteristic Curves

光谱分布曲线
Relative Intensity Vs. Wavelength

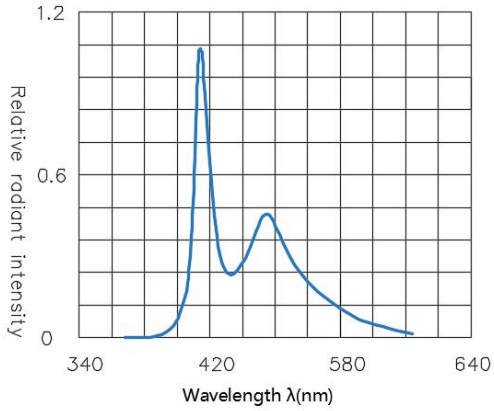

正向电压与正向电流的关系
Forward voltage Vs. Forward current

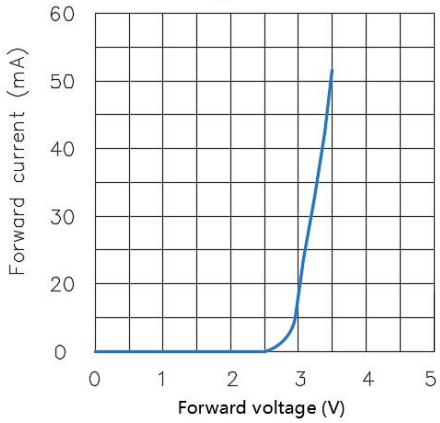

环境温度与相对光强的关系
Amblent temperature Vs. Relative luminous intensity

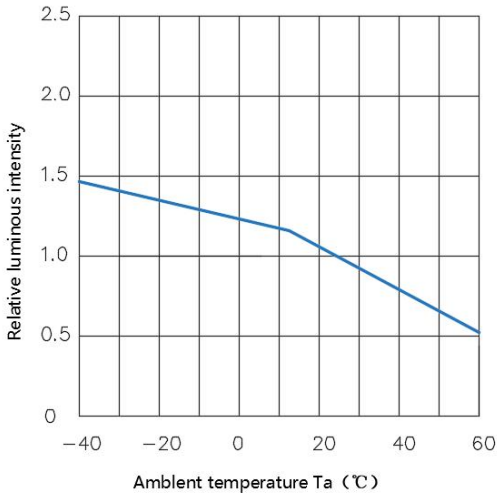

正向电流与亮度的关系
Relative luminous intensity Vs. Forward current

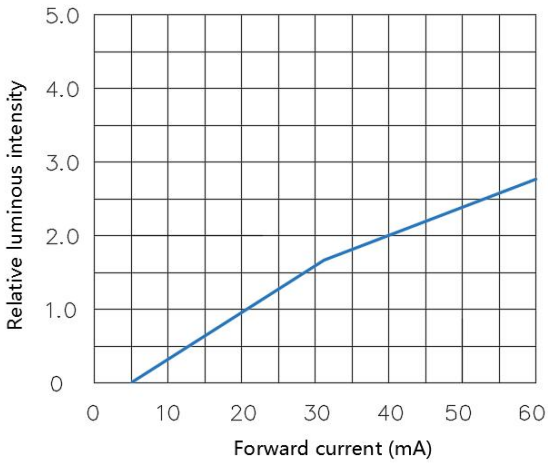

正向电流降额曲线
Forward current derating curve

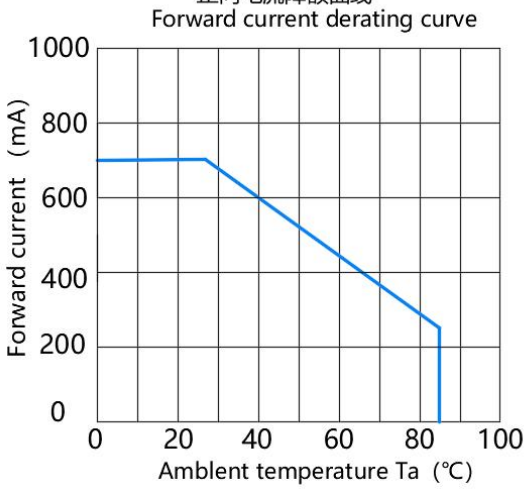

相对辐射强度与空间角度关系
Radiation diagram

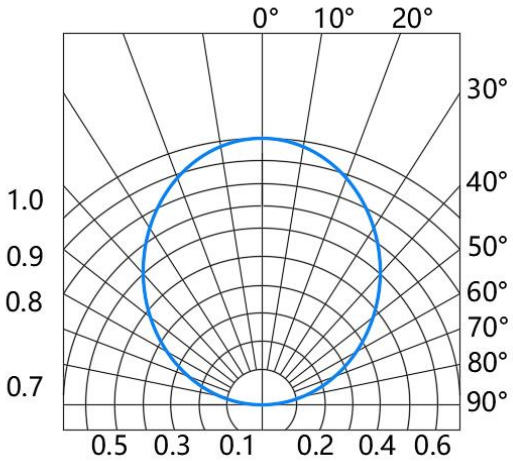

＊注： 如无另外注明，测试环境温度为 25±5℃

Note: If not otherwise indicated the test environment temp erature is 25±5℃

可靠性实验

Reliability Test Items And Conditions

1.测试项目和标准 Test items and criteria

测试项目 Test Parameter	参考标准 Reference Criterion	测试条件 Test Condition	时间 Time	数量 Quantity	接受/拒收 Ac/Re
回流焊 Resistance to Soldering Heat	JESD22-B106	Temp:260℃max T=6sec	3 times	22Pcs	0/1
温度循环 thermocycling	JESD22-A104	120℃±5℃30min. -40℃±5℃30min.	100 Cycles	22Pcs	0/1
高温储存 High-temperature storage	JESD22-A103	Temp:100℃±5℃	1000Hrs	22Pcs	0/1
低温储存 Low temperature storage	JESD22-A119	Temp:-40℃±5℃	1000Hrs	22Pcs	0/1
工作寿命 Working life	JESD22-A108	Ta=25℃±5℃ IF=350mA	1000Hrs	22Pcs	0/1
高温高湿实验 High temperature	JESD22-A101	85℃±5℃/85%RH	1000Hrs	22Pcs	0/1

2.失效判断标准 Criteria For Judging Damage

项目 Parameter	符号 Symbol	测试条件 Test Condition	判定标准 Judgement standard	
			最小 Min	最大 Max
正向电压 Forward Voltage	VF	IF=700mA	-	U.S.L*1.2
反向电流 Reverse current	IR	VR=5V	-	U.S.L*2.0
光通量 Luminous Intensity	Φ	IF=700mA	L.S.L*0.7	-

* 注： 1.USL：标准值上限值，LSL：标准值下限值

Note： USL: Upper Standard Level, LSL: Lower Standard Level

2.数据表格中所示的技术信息仅限于典型特征值和电路实例引用的产品，它既不构成工业特性的保证，也不构成任何许可的授权。

The technical information shown in the data sheet is limited to the products cited by typical feature values and circuit examples, which is neither a guarantee of industrial characteristics nor an authorization of any license.

外形尺寸

Outline Dimensions

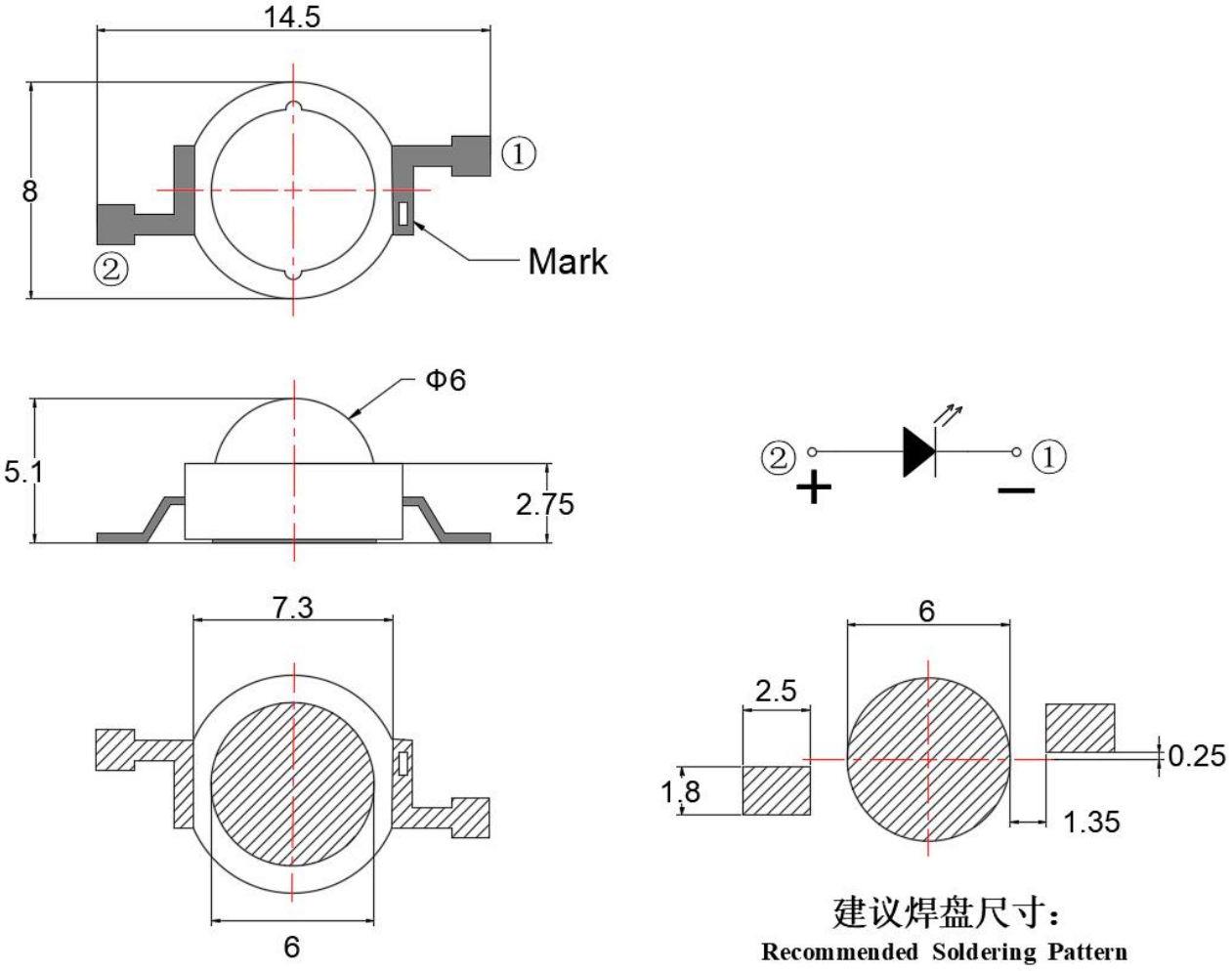

* 注： 1.以上尺寸单位均为毫米（mm）

Note： All dimensions are in millimeters.

2.未特别标注公差的尺寸公差均为±0.25mm

Tolerance is±0.25mm unless otherwise noted

包装(1)

Packaging

1. 载带与圆盘尺寸 Belt and disk dimensions

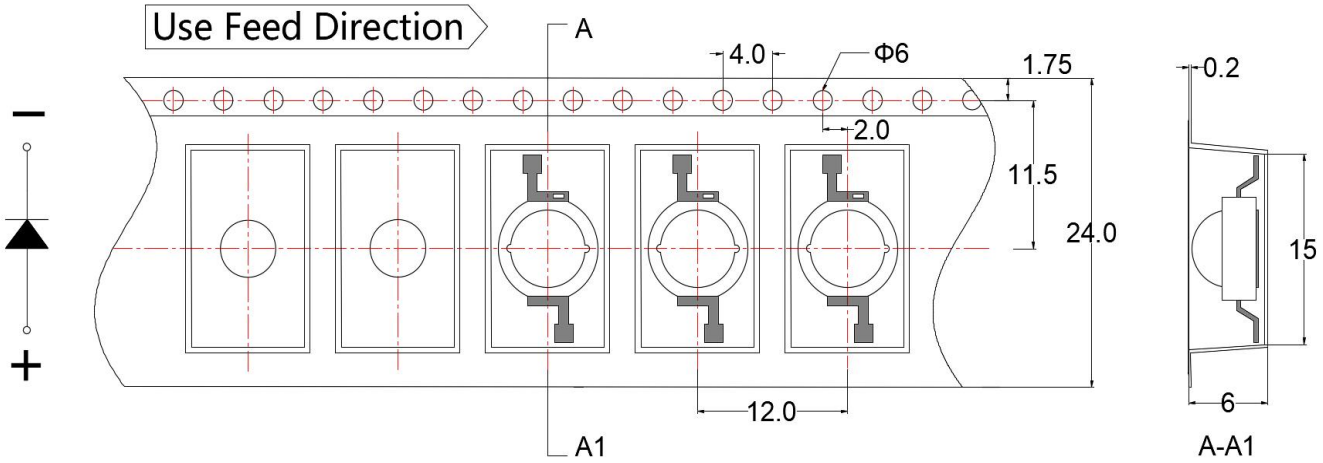

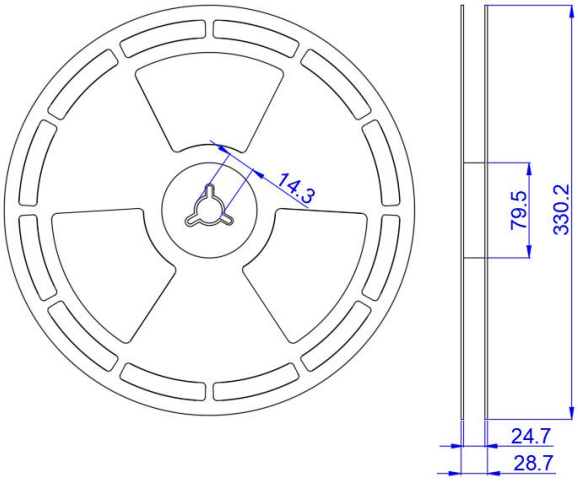

* 注： 1.以上尺寸单位均为毫米（mm）

Note： All dimensions are in millimeters（mm）.

2.未特别标注公差的尺寸公差均为±0.10mm

Tolerance is±0.10mm unless otherwise noted

2.圆盘及载带卷出方向及空穴规格

Disk and carrier belt direction of roll and hole dimensions

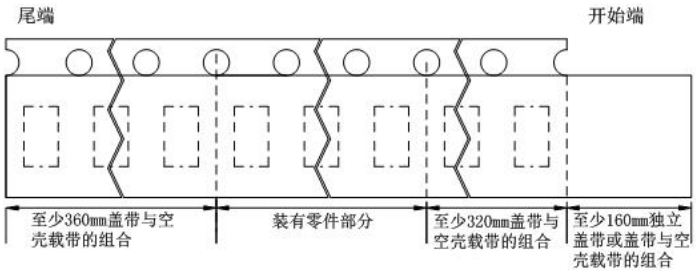

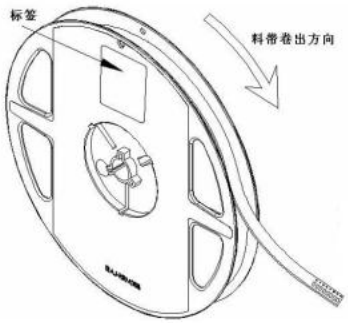

包装(2)

Packaging

3.防潮抗静电包装 Moisture Proof and Antti-Electrostic Foil Bag

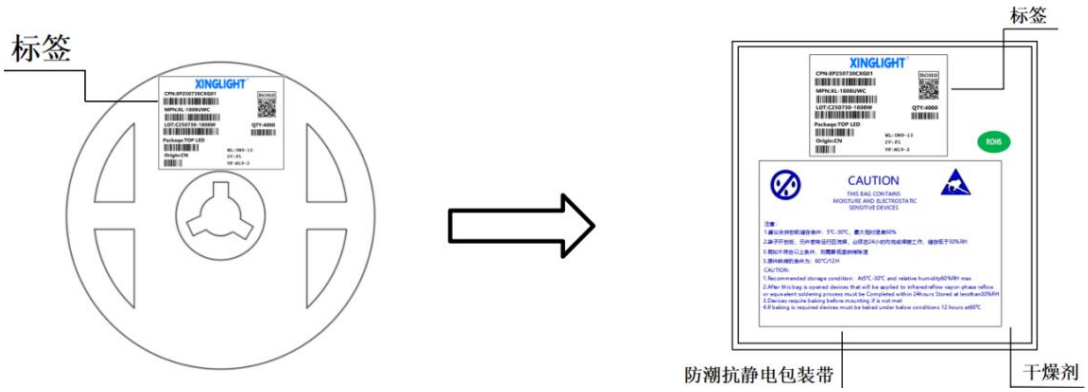

4.外箱包装 Cardboard Box

◇ **外包装箱 Cardboard Box**

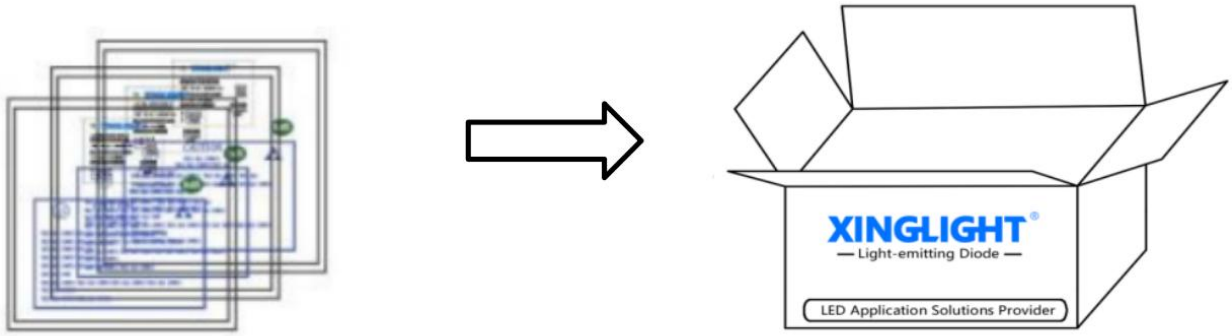

5.标签说明 Label Expantion

◇ **标签说明 Label Expantion**

CPN：批号/档位　　LOT：日期/封装颜色

MPN：型号　　VF：电压代码

WL：波长代码　　IV：亮度代码

ORIGIN：产地　　QTY：数量

PACKAQE：封装

焊接指导(1)

Guideline for Soldering

1. 使用烙铁人手焊接 Hand Soldering

只建议在修理和重工的情况下使用手工焊接；推荐使用功率低于 30W 的烙铁，焊接时烙铁的温度必须保持在 300℃以下，且每个电极只能进行一次焊接，每次焊接的持续时间不得超过 3 秒。

人手焊接过程中的不慎操作易引起 LED 产品的损坏，应当小心谨慎。

Manual welding is recommended only for repair and heavy industry situations. A soldering iron of less than 30W is recommended to be used in Hand Soldering. Please keep the temperature of the soldering iron under 300℃ while soldering. Each terminal of the LED is to go for less than 3 second and for one time only.Be careful because the damage of the product is often started at the time of the hand soldering.

2. 回流焊接： 推荐使用以下无铅回流焊接温度图进行。

Reflow Soldering: Use the conditions shown in the under Figure of Pb -Free Reflow Soldering.

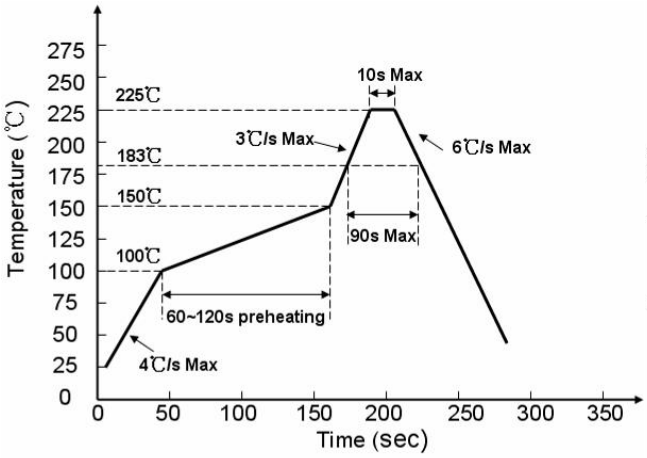

有铅制程 Lead process

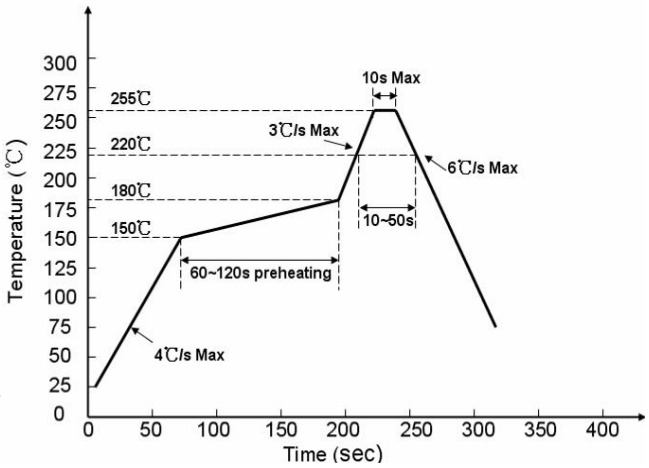

无铅制程 lead free

＊注： 1.回流焊接最多只能进行两次。

Note: Reflow soldering should not be done more than two times.

2.在回流焊接升温过程中，请不要对 LED 施加任何压力。

Stress on the LEDs should be avoided during heating in soldering process.

3.在焊接完成后，待产品温度下降到室温之后，再进行其他处理。

After soldering, do not deal with the product before its temperature drop down to room temperature.

4.产品最佳的最高焊接温度建议控制在 260±5℃/6S

The recommended maximum welding temperature for the product is 260±5 ℃/6s

焊接指导(2)

Guideline for Soldering

3. 清洗 Cleaning

在焊接后推荐使用酒精进行清洗，在温度不高于 30℃的条件下持续 3 分钟， 不高于 50℃的条件下持续 30 秒。

It is recommended that alcohol be used as a solvent for cleaning after soldering. Cleaning is to go under 30℃ for 3 minutes or 50℃ for 30 seconds. When using other solvents, it should be confirmed beforehand whether the solvents will dissolve the package and the resin or not.

使用其他类似溶剂清洗前，请先确认使用的溶剂不会对 LED 的封装和环氧树脂部分造成损伤。超声波清洗也是有效的方法，一般最大功率不应超过 300W ，否则可能对 LED 造成损伤。请根据具体的 情况预先测试清洗条件是否会对 LED 造成损伤。

Ultrasonic cleaning is also an effective way for cleaning. But the influence of Ultrasonic cleaning on LED depends on factors such as ultrasonic power. Generally, the ultrasonic power should not be higher than 300W. Before cleaning, a pretest should be done to confirm whether any damage to LEDs will occur.

* 注：此一般指导原则并不适用于所有 PCB 设计和焊接设备的配置。具体工艺受到诸多因素的影响， 请根据特定的 PCB 设计和焊接设备来确定焊接方案。

Note: This general guideline may not apply to all PCB designs and configurations of all soldering equipment. The technics in practise is influenced by many factors, it should be specialized base on the PCB designs and configurations of the soldering equipment.

使用注意事项(1)

Precautions

1. 贮存 Storage

- 本产品使用密封防潮抗静电袋包装，并附有干燥剂，未开封的产品有一年的保存时间。
  Moisture proof and anti-electrostatic package with moisture absorbent material is used, to keep moisture to a minimum.
- 开封前，产品须存放在温度不高于 30℃，湿度不高于 60%RH 的环境中。
  Before opening the package, the product should be kept at 30℃ or less and humidity less than 60% RH, and be used within a year.
- 开封后，产品须存放在温度不高于 30℃，湿度不高于 40%RH 的环境中，且应该在 168 小时（7 天） 内使 用完。建议工作环境为温度不高于 30℃，湿度不高于 60%RH。
  After opening the package, the product should be stored at 30℃ or less and humidity less than 40%RH, and be soldered within 168 hours (7 days). It is recommended that the product be operated at the workshop condition of 30℃ or less and humidity less than 60%RH.
- 对于尚未焊接的 LED ，如果吸湿剂或包装失效，或者产品没有符合以上有效存储条件，烘焙可以起到一定的性能恢复效果。烘焙条件： （60±5） ℃ ，持续 24 小时。
  If the moisture absorbent material has fade away or the LEDs have exceeded the storage time, baking treatment should be performed based on the following condition: (60±5)℃ for 24 hours.

2. 静电 Static Electricity

- 静电和电涌会导致产品特性发生改变，例如正向电压降低等，如果情况严重甚至会损毁产品。所以在使用时必须采取有效的防静电措施。所有相关的设备和机器都应该正确接地，同时必须采取其他防止静电和电涌的措施。使用防静电手环，防静电垫子，防静电工作服、工作鞋、手套，防静电容器，都是有效的防止静电和电涌的措施。
  Static electricity or surge voltage damages the LEDs. Damaged LEDs will show some unusual characteristic such as the forward voltage becomes lower, or the LEDs do not light at the low current. even not light.All devices, equipment and machinery must be properly grounded. At the same time, it is recommended that wrist bands or anti-electrostatic gloves, anti-electrostatic containers be used when dealing with the LEDs.

3. 设计建议 Design Consideration

- 设计电路时，通过 LED 的电流不能超过规定的最大值，同时，还需使用保护电阻，否则，微小的电压变化将会引起较大的电流变化，可能导致产品损毁。
  In designing a circuit, the current through each LED must not exceed the absolute maximum rating specified for each LED. In the meanwhile, resistors for protection should be applied, otherwise slight voltage shift will cause big current change, burn out may happen.

使用注意事项(2)

Precautions

- 建议使用以下（A）电路，该电路能够很好的调节通过每个 LED 的电流； 不推荐使用（B）电路，该电路 在持续的电压驱动下，LED 的正向电压（VF ）发生变化，电流会随之而发生变化，可能使某些 LED 承受高于规定的电流值。

  It is recommended to use Circuit A which regulates the current flowing through each LED rather than Circuit B. When driving LEDs with a constant voltage in Circuit B, the current through the LEDs may vary due to the variation in Forward Voltage (VF) of the LEDs. In the worst case, some LED may be subjected to stresses in excess of the Absolute Maximum Rating.

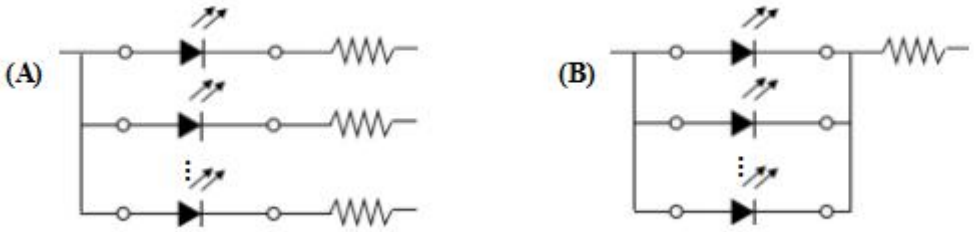

- LED 的特性容易因为自身的发热和环境的温度的改变而发生改变。温度的升高会降低 LED 的发光效率、影响发光颜色等，所以在设计时应充分考虑散热的问题。

  Thermal Design is paramount importance because heat generation may result in the Characteristics decline, such as brightness decreased, Color changed and so on. Please consider the heat generation of the LEDs when making the system design.

4. 其他事项 Others

- 直接用手拿取产品不但会污染封装树脂表面，也可能由于静电等因素导致产品性能的改变。过度的压力也可能直接影响封装内部的管芯和金线，因此请勿对产品施加过度压力，特别当产品处于高温状态下，例如在回流焊接过程中。

  When handling the product, touching the encapsulant with bare hands will not only contaminate its surface, but also affect on its optical characteristics. Excessive force to the encapsulant might result in catastrophic failure of the LEDs due to die breakage or wire deformation. For this reason, please do not put excessive stress on LEDs, especially when the LEDs are heated such as during Reflow Soldering.

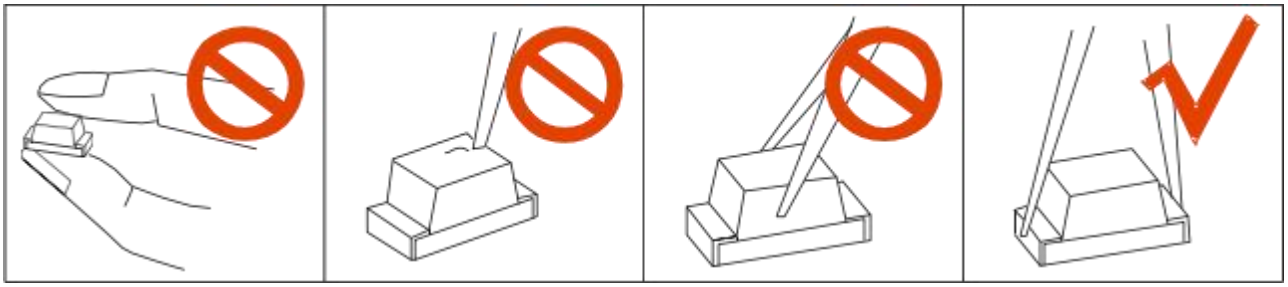

使用注意事项(3)

Precautions

- LED 的环氧树脂封装部分相当脆弱，请勿用坚硬、尖锐的物体刮、擦封装树脂部分。在用镊子夹取的时候也应当小心注意。
  The epoxy resin of encapsulant is fragile, so please avoid scratch or friction over the epoxy resin surface. While handling the product with tweezers, do not hold by the epoxy resin, be careful.

5. 眼睛保护忠告 Safety Advice For Human Eyes

- LED 发光时，请勿直视发光光源，特别是对于一些光强较高的 LED ，强光可能伤害你的眼睛。
  Viewing direct to the light emitting center of the LEDs, especially those of great Luminous Intensity, will cause great hazard to human eyes. Please be careful.

规格书如有修改，不另行通知

If there are any modifications to the specification sheet, no further notice will be given