FEATURE

- Tiny and light with thick film technology
- High reliability
- RoHS complaint
- Compatible with reflow and wave soldering type
- MSL class: MSL 1
- Applications
  - Home appliances
  - Telecommunications
  - Smart wears
  - Computer, notebook, workstation, tablet, and peripherals
  - Instruments and meters
  - etc.

MANUFACTURER PART NO.

For example: GR1206J100KT5G00-GR1206 ±5% 100KΩ T/R-5000

Series	Size	Tol.	Nominal Resistance Value	PKG	SPQ	Feature	TCR
2 codes	4 codes	1 code	2~5 codes	1 code	1 code	1 code	2 codes
GR	1206	J	100K	T	5	G	00
General Purpose Thick Film Chip Resistors	0105 0201 0402 0603 0805 1206 1210 1812 2010 2512	D=±0.5% F=±1% J=±5%	0R=Jumper(< 50mΩ) 1R①=1Ω 4R7=4.7Ω 4K7②=4.7KΩ 100K=100KΩ 4M7③=4.7MΩ 22M=22MΩ	T=T/R④	4=4K 5=5K A=10K B=15K C=20K D=50K E=60K	G=Std. S=P.C.⑤	00=Refer to item RELIABILITY.

Note: ① R=Radix, 10^0, Ω ② K=Kilo, 10^3, KΩ ③ M=Mega, 10^6, MΩ

④ T/R=Taping in Reel Package. ⑤ P.C.=Personal and Customized.

CHARACTERISTICS

Series	Rated Power	MWV①	MOV②	DWV③	Jumper MRC④	Jumper MOC⑤	Resistance Value Range			
							±0.5%	±1%	±5%	Jumper
GR0105	1/32W	15V	30V	-	0.5A	1A	-	10Ω-10MΩ	1Ω-10MΩ	< 50mΩ
GR0201	1/20W	25V	50V	-	0.5A	1A	-	1Ω-10MΩ	1Ω-10MΩ	< 50mΩ
GR0402	1/16W	50V	100V	100V	1A	2A	1Ω-10MΩ	1Ω-22MΩ	1Ω-22MΩ	< 50mΩ
GR0603	1/10W	75V	150V	300V	1A	2A	1Ω-10MΩ	1Ω-22MΩ	1Ω-100MΩ	< 50mΩ
GR0805	1/8W	150V	300V	500V	2A	5A	1Ω-10MΩ	1Ω-22MΩ	1Ω-100MΩ	< 50mΩ
GR1206	1/4W	200V	400V	500V	2A	10A	1Ω-10MΩ	1Ω-22MΩ	1Ω-100MΩ	< 50mΩ
GR1210	1/2W	200V	500V	500V	2A	10A	1Ω-10MΩ	1Ω-22MΩ	1Ω-100MΩ	< 50mΩ
GR1812	3/4W	200V	500V	500V	2A	10A	1Ω-10MΩ	1Ω-22MΩ	1Ω-100MΩ	< 50mΩ
GR2010	3/4W	200V	500V	500V	2A	10A	1Ω-10MΩ	1Ω-22MΩ	1Ω-100MΩ	< 50mΩ
GR2512	1W	200V	500V	500V	2A	10A	1Ω-10MΩ	1Ω-22MΩ	1Ω-100MΩ	< 50mΩ

Note: ① MWV=Max. Working Voltage. ② MOV=Max. Overload Voltage. ③ DWV=Dielectric Withstanding Voltage

④ MRC=Max. Rated Current ⑤ MOC=Max. Overload Current

This document is subject to change without notice. The products described herein, and this document are subject to specific disclaimers, set forth at GiantOhm official website, http://www.giantohm.com/download/cid/22.html

POWER DERATING CURVE

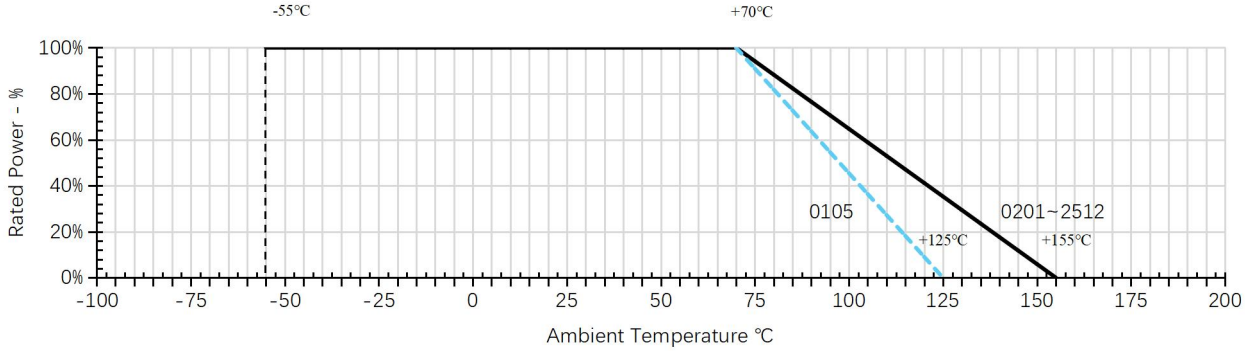

Operating temperature range: 0105 size: from -55℃ to +125℃; 0201~2512 size: from -55℃ to +155℃.

STRUCTURE GRAPH

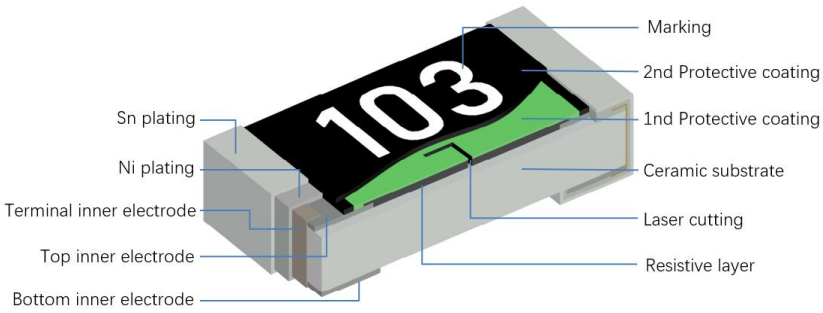

RATED VOLTAGE

Resistors should have a Rated Voltage DC or AC corresponding to Rated Power which can be calculated by formula as below.

The Rated Voltage of certain resistance value should be the calculated result or Max. Working Voltage of product series whichever less.

Formula:

$$E = \sqrt{P \times R}$$

E=Rated voltage(V)
P=Rated power(W)
R=Nominal resistance(Ω)

DIMENSIONS

Unit: mm

Figure	Type	L	W	H	A	B
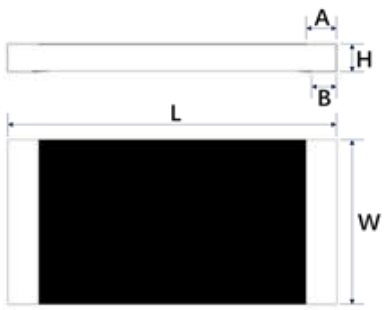	0105	0.40±0.02	0.20±0.02	0.13±0.02	0.10±0.03	0.10±0.03
	0201	0.60±0.03	0.30±0.03	0.23±0.03	0.10±0.05	0.15±0.05
	0402	1.00±0.10	0.50±0.05	0.35±0.05	0.20±0.10	0.25±0.10
	0603	1.60±0.10	0.80±0.10	0.45±0.10	0.30±0.20	0.30±0.20
	0805	2.00±0.15	1.25±0.15	0.55±0.10	0.40±0.20	0.40±0.20
	1206	3.10±0.15	1.55±0.15	0.55±0.10	0.45±0.20	0.45±0.20
	1210	3.10±0.10	2.60±0.20	0.55±0.10	0.50±0.25	0.50±0.20
	1812	4.50±0.20	3.20±0.20	0.55±0.20	0.50±0.20	0.50±0.20
	2010	5.00±0.10	2.50±0.20	0.55±0.10	0.60±0.25	0.50±0.20
	2512	6.35±0.10	3.20±0.20	0.55±0.10	0.60±0.25	0.50±0.20

This document is subject to change without notice. The products described herein, and this document are subject to specific disclaimers, set forth at GiantOhm official website, http://www.giantohm.com/download/cid/22.html

RELIABILITY

Item	Test Method	Acceptable criterion
Temperature Coefficient of Resistance (T.C.R.)	$TCR(PPM/℃)=\frac{(R_2-R_1)}{R_1\times(T_2-T_1)}\times10^6$ R_1=Value in room temperature R_2=Value in test temperature -55℃ or +125℃ T_1=Room temperature T_2=Test temperature -55℃ or +125℃ Reference: IEC 60115-1 6.2	GR0105: 1Ω≤R < 10Ω: -200~+600PPM/℃ 10Ω≤R < 100Ω: ±300PPM/℃ ≥100Ω: ±200PPM/℃ GR0201: 1Ω≤R≤10Ω: -100~+350PPM/℃ > 10Ω: ±200PPM/℃ GR0402~2512: 1Ω≤R≤10Ω: ±200PPM/℃ 10 Ω < R≤10M: ±100PPM/℃ 10M < R≤22MΩ: ±200PPM/℃ 22M < R≤100MΩ: ±300PPM/℃
Insulation Resistance	Using the parallel clamp method: 100±15V_{DC} voltage is applied between the electrode and the substrate within 60 seconds. Test the insulation resistance between the terminal and the back of the part. Reference: IEC 60115-1 12.1.3.5	≥ 10^9Ω
Dielectric Withstanding Voltage	Apply an alternating current between the electrode and substrate, with the effective value of the maximum overload voltage referring to the DWV characteristics, and maintain the pressure for 60 ± 5 seconds. Reference: IEC 60115-1 12.2.4	Test to confirm if the presence of current or arc breakdown by ≥10uA
Short Time Over Load	Apply 2.5 times of rated voltage or maximum overload voltage (whichever is the smallest) for 5 seconds Reference: IEC 60115-1 8.1.4.2	1% series: △R/R=±(1.0%+0.05Ω) 5% series: △R/R=±(2.0%+0.05Ω) 0105: △R/R=±(2.0%+0.05Ω) Jumper: < 50mΩ
Intermittent Overload	Put it in the thermostat, apply 2.5 times of rated voltage, 1 second ON, 25 seconds OFF, 10000^{+400}_{-0} cycles, take it out and stand for 60 minutes, then measure the change rate of resistance value. Reference: IEC 60115-1 8.4.4	△R/R=±(5.0%+0.05Ω) Jumper: < 50mΩ
Resistance to Solvent	Immerse in isopropanol solvent at room temperature (23±5℃) for 5min, wipe 10 times with a hard toothbrush, repeat 3 times, take out and blow dry for examination Reference: IEC 60115-1 11.3.2 method1	No obvious damage, peeling, swelling phenomenon
Solderability	Pretreatment: dry heat 155℃, 4H, after take out, stand at room temperature for 2 hours. Test method B1: Dip the resistance in a tin furnace at 245±5℃ for 5 seconds, then take it out and observe the solder area under a microscope; Method D: 260±5℃, T=30+5/-0s. Reference: J-STD-002 & IEC 60115-1 11.1.4.3	1. Solder coverage over 95% 2. No more than 5% of the partially exposed substrate, non-wetted plating or ceramic substrate part.
Resistance to Soldering Heat	Reflow test, time above 217 °C is 60s-150s, time above 250 ± 5°C is 30±5s. Reference: IEC 60115-1 11.2.4.3& MIL-STD-202 Method 210	△R/R=±(1.0%+0.05Ω) Jumper: < 50mΩ
Thermal Shock	High and low temperature test is carried out according to the upper and lower limits of the application temperature of the parts, the residence time of the upper and lower limits of the temperature is 30min, and the temperature conversion time is less than 30s, lasting 500 cycles Reference: IEC 60115-1 10.1.4	△R/R=±(1.0%+0.05Ω) Jumper: < 50mΩ
Solder Joint Endurance Test	The SMD resistance was welded to the test board and bent with the standard pressure block. After standing for 60 sec. under the corresponding deformation condition, the change rate of resistance value of the part was tested. Size: 0402, 0603, 0805 / 0105, 0201, 1206, 1210 / 1812, 2010, 2512 Depth: 5mm / 3mm / 2mm Reference: IEC 60115-1 9.8.4	△R/R=±(1.0%+0.05Ω) Jumper: < 50mΩ
Resistance to Dry Heat	Put it in an oven at 155±5℃ for 1000^{+48}_{-0}hrs., take it out and let it stand for more than 1hr., then measure the change rate of resistance value Reference: IEC 60115-1 7.3	1% series: △R/R=±(1.0%+0.05Ω) 5% series: △R/R=±(3.0%+0.05Ω) 0105: △R/R=±(3.0%+0.05Ω) Jumper: < 50mΩ

This document is subject to change without notice. The products described herein, and this document are subject to specific disclaimers, set forth at GiantOhm official website, http://www.giantohm.com/download/cid/22.html

Item	Test Method	Acceptable criterion
Loading Life in Moisture	Place it in a constant temperature and humidity box with 40±2℃ and 90~96%RH and apply the voltage (IEC 60115-1 10.4 Table 22) for 1000 hrs. Take it out and stand for 30 minutes before applying rated voltage for 1 minute, and then measure the change rate. Reference: IEC 60115-1 10.4	1% series: △R/R=±(1.0%+0.05Ω) 5% series: △R/R=±(3.0%+0.05Ω) 0105: △R/R=±(3.0%+0.05Ω) Jumper: < 100mΩ
Load Life	Put in an oven at 70±2℃, apply rated voltage, 90 min ON, 30 min OFF, 1000 hrs., take out and stand for more than 60 min, then measure the resistance change rate. Reference: IEC 60115-1 7.1	1% series: △R/R=±(1.0%+0.05Ω) 5% series: △R/R=±(3.0%+0.05Ω) 0105: △R/R=±(3.0%+0.05Ω) Jumper: < 100mΩ
Low temperature load test	-55℃, unpowered, 1 hr.: Rated voltage/current for 45 minutes, then unpowered within 15 minutes, return to room temperature, take out and stand for 24 hours, then measure the change rate of resistance value. Reference: IEC 60115-1 10.2.4	1% series: △R/R=±(1.0%+0.05Ω) 5% series: △R/R=±(2.0%+0.05Ω) 0105: △R/R=±(2.0%+0.05Ω) Jumper: < 50mΩ
Shear force test	Weld the part to the PCB. Apply the corresponding test stress from the side of the part with the test terminal for 10s. Check the appearance of the welded end of the part under the stress condition Size: 0201 / 0402 / 0603, 0805, 1206, 1210, 1812, 2010, 2512 Test force: 2N / 10N / 18N Reference: IEC 60115-1 9.7	Without visible damage.

SOLDERING TEMPERATURE

- Recommendation only. Please adjust it according to the actual application

Lead-free IR Reflow Soldering Profile	Lead-free Double-Wave Soldering Profile
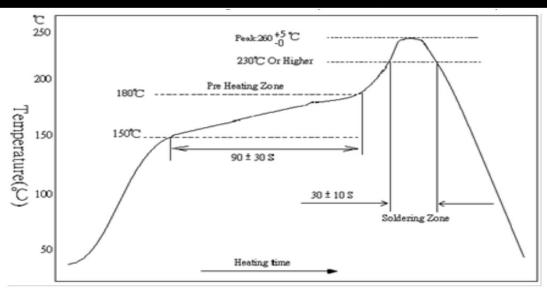	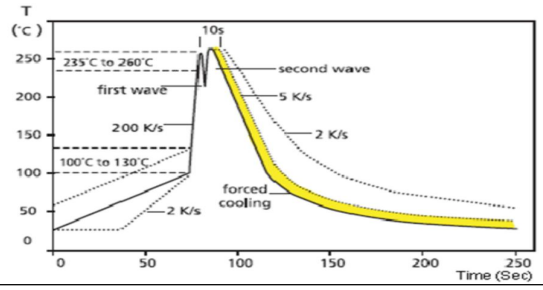
Note: - The Max. Temp. is 260^{+5}_{-0}℃ within 10 sec - Reference: J-STD-020D	Note: - Suit for ⩾ 0603 size - Manual soldering in 350±10℃ within 3 sec.

SOLDERING PAD

Resistance value would be lower than nominal value because of joint with soldering material, so designing circuit should adjust the pad size

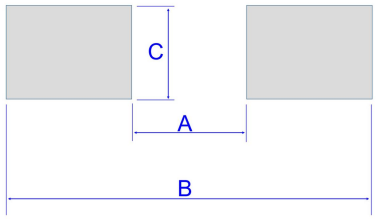

Unit: mm

Type	A	B	C
0105	0.2	0.5	0.2
0201	0.3	1.0	0.4
0402	0.5	1.5	0.6
0603	0.8	2.1	0.9
0805	1.2	3.0	1.3
1206	2.2	4.2	1.6
1210	2.2	4.2	2.8
1812	3.1	5.9	3.0
2010	3.5	6.1	2.8
2512	3.8	8.0	3.5

This document is subject to change without notice. The products described herein, and this document are subject to specific disclaimers, set forth at GiantOhm official website, http://www.giantohm.com/download/cid/22.html

WORKING ENVIRONMENT

If user intends to use products in special environments or states (including but not limited to the following), it is necessary to approve special characteristics and reliability for the following or other application environments.

A. High temperature, high moisture.
B. Near the sea, or corrosive gas, such as Cl_2, H_2S, NH_3, SO_2 and NO_2, etc.
C. Unverified liquids, such as water, oil, chemical or organic solvent.
D. Unverified resin or paint to cover products.
E. Products should be washed with water soluble cleaner even if non cleaning flux.

STORAGE / CARRY CONDITIONS

A. Temperature: 25±5℃
B. Humidity: 60±15%RH
C. Storage life: 0105/0201 size: 1 year; ⩾0402 size: 2 years. FIFO.
D. Please hold box correct orientation when storing and carrying. It is strictly prohibited to fall or squeeze the box, otherwise the product electrode or body may be damaged.

TAPING SPECIFICATIONS

A. Taping drawing

Carrier Taping A

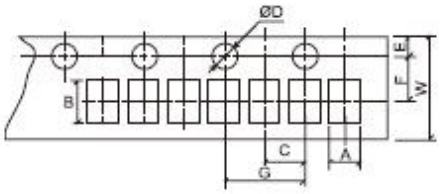

Carrier Taping B

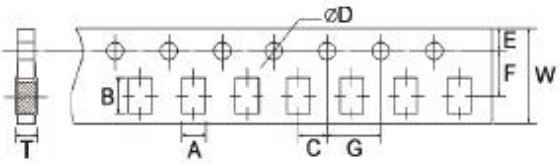

Embossed Taping

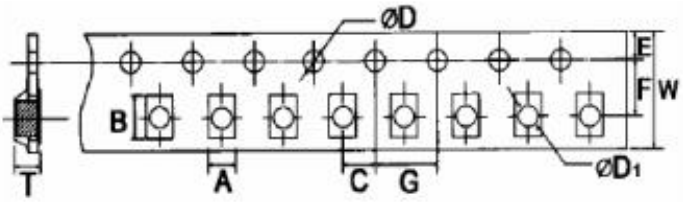

B. Taping Dimensions unit: mm

Type or Size		A±0.2	B±0.2	C±0.05	$ØD^{+0.1}_{-0}$	E±0.1	F±0.05	G±0.1	W±0.2	T±0.1
Carrier Taping A	0105	0.24±0.05	0.45±0.05	2.0	1.5	1.75	3.5	4.0	8.0	0.40
	0201	0.40±0.05	0.70±0.05	2.0	1.5	1.75	3.5	4.0	8.0	0.47
	0402	0.67±0.1	1.17±0.1	2.0	1.5	1.75	3.5	4.0	8.0	0.47
Carrier Taping B	0603	1.10	1.90	2.0	1.5	1.75	3.5	4.0	8.0	0.67
	0805	1.65	2.40	2.0	1.5	1.75	3.5	4.0	8.0	0.81
	1206	1.90	3.45	2.0	1.5	1.75	3.5	4.0	8.0	0.81
	1210	2.85	3.50	2.0	1.5	1.75	3.5	4.0	8.0	0.81

This document is subject to change without notice. The products described herein, and this document are subject to specific disclaimers, set forth at GiantOhm official website, http://www.giantohm.com/download/cid/22.html

Type or Size		A±0.2	B±0.2	C±0.05	$ØD^{+0.1}_{-0}$	$ØD^{+0.25}_{-0}$	E±0.1	F±0.05	G±0.1	W±0.2	T±0.1
Embossed Taping	2010	2.90	5.60	2.00	1.50	1.50	1.75	5.50	4.00	12.00	1.00
	1812	3.50	4.80	2.00	1.50	1.50	1.75	5.50	4.00	12.00	1.00
	2512	3.50	6.70	2.00	1.50	1.50	1.75	5.50	4.00	12.00	1.00

REEL SPECIFICATION

A. Reel drawing

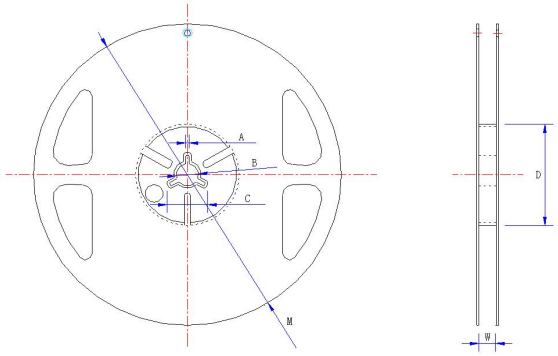

B. Reel dimension unit: mm

Type	SPQ PCS/Rl.	A±0.5	B±0.5	C±0.5	D±1	M±2	W±1
0105	20,000	2.0	13.0	21.0	60.0	178.0	10.0
0201	15,000	2.0	13.0	21.0	60.0	178.0	10.0
0402	10,000	2.0	13.0	21.0	60.0	178.0	10.0
0603	5,000	2.0	13.0	21.0	60.0	178.0	10.0
0805	5,000	2.0	13.0	21.0	60.0	178.0	10.0
1206	5,000	2.0	13.0	21.0	60.0	178.0	10.0
1210	5,000	2.0	13.0	21.0	60.0	178.0	10.0
1812	4,000	2.0	13.0	21.0	60.0	178.0	13.8
2010	4,000	2.0	13.0	21.0	60.0	178.0	13.8
2512	4,000	2.0	13.0	21.0	60.0	178.0	13.8

LABEL SPECIFICATION

A. Produce Label（Ref.）

B. Customer Label（Ref.）

This document is subject to change without notice. The products described herein, and this document are subject to specific disclaimers, set forth at GiantOhm official website, http://www.giantohm.com/download/cid/22.html

PACKING BOX

A. Packing Type

Taping in reel / Bulk in plastic bag.

B. Inner box

The inner box has several capacities hold 1 reel, 2 reels, 3 reels, 4 reels, 5 reels and 10 reels.

C. Out box

The out box has two capacities hold 6- or 8-pieces inner box.

NOTE OF COVER TAPE PEEL OFF

A. Figure of cover tape peel off.

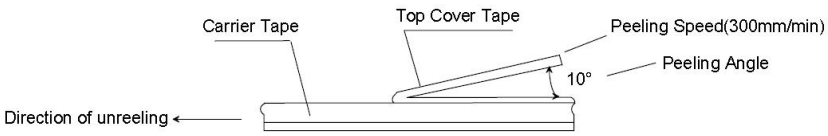

B. Please keep peeling speed under 300mm per minute.

C. Please keep the angle between cover tape and direction of unreeling narrower than 10 degree.

D. There is limit of adhesive force between cover tape and carrier tape or embossed tape shown as following table.

Size of chip resistors	0105, 0201	0402	0603 and above
Adhesive force limit	6~30gf	10~40gf	10~70gf

This document is subject to change without notice. The products described herein, and this document are subject to specific disclaimers, set forth at GiantOhm official website, http://www.giantohm.com/download/cid/22.html

LEGAL DISCLAIMER

GiantOhm and its distributors or agents (hereinafter referred to as GiantOhm) shall not bear any responsibility for any error, inaccuracy or incompleteness contained in any product related information (including but not limited to product specifications, data, pictures, and charts). GiantOhm may change, revise, or improve product related information at any time without prior notice.

GiantOhm makes no commitment, guarantee for the suitability of its products for special purposes or the continuous production of any of its products. To the maximum extent permitted by law, GiantOhm does not assume any of the following responsibilities:

A. All liabilities arising from the application or use of any GiantOhm's products.
B. All liabilities, including but not limited to the loss of profits or direct damage, indirect damage, special damage, punitive damage, derivative damage, or incidental damage caused by or related to GiantOhm's products.
C. All implied warranties, including fitness for a particular purpose, non-infringement, and merchantability.

GiantOhm defines this product as a general consumer electronic purpose, which is not applicable to any medical lifesaving or life-sustaining equipment, nor to any application that may cause casualties in case of failure of GiantOhm's products.

All technical suggestions on product application provided by GiantOhm are provided free of charge. GiantOhm assumes no obligation and responsibility for adopting such technical suggestions and available results, and all risks of adopting such suggestions shall be borne by the buyer. All risks and responsibilities arising from the buyer's use of GiantOhm's products in combination with other materials or raw materials, or in any combination in its manufacturing process, shall be borne by the buyer, regardless of any oral or written technical instructions, suggestions or other requirements given by GiantOhm for the use of the products.

The information provided above is only to explain the product specifications. If the product is not changed, GiantOhm has all the rights to modify the above contents without prior notice, and the product change will be notified to the customer by ECN.

This document is subject to change without notice. The products described herein, and this document are subject to specific disclaimers, set forth at GiantOhm official website, http://www.giantohm.com/download/cid/22.html

VERSION HISTORY

Version	Date	Change Item(s)	Description
A	2022/05/25	-	First version
B	2022/10/31	Reliability	Updated test items, test methods and acceptable criterion.
C	2023/01/31	Characteristics	0402~2512 size, Resistance Value range extended to 22MΩ
D	2023/02/03	Full	Add 1812 size
E	2023/04/27	Full	Add 0105 size 0603~2512 size, Resistance Value range extended to 100MΩ
F	2023/07/21	Reliability	Updated test items, test methods.
G	2023/12/26	Full	Add Packing Specifications.
H	2024/05/13	Full	Add Jumper Description in MPN Add Jumper test acceptable criterion. Add Moisture sensitivity level description.

This document is subject to change without notice. The products described herein, and this document are subject to specific disclaimers, set forth at GiantOhm official website, http://www.giantohm.com/download/cid/22.html