JYEG

RoHS Compliant

Tangshan Guoxin Jingyuan Electronics Co.,Ltd

Add: Xinxing Electronics Industrial Park, Yutian,Tangshan,Hebei,China

TEL: 86-315-6118179 E-mail: sales@jingyuan.com

FAX: 86-315-6113576 Web : www.jingyuan.com

APPROVAL SHEET

Customer :

Part Number :

JYEG P/N : JYVCD3H7G3BC5Y-32.768

Holder : SMD3225 VCXO

Frequency : 32.768MHZ

Manufacturer : Guoxin Jingyuan Electronics

Date : 2024/11/06

Prepared	Checked	Approved
Huang Mingxing	Yang Tiesheng	Zhang Liqiang

(For Customer Use)

Acceptable	Non-Acceptable

Revision History

No.	Revised Date	Change Content	Approved	Remark
V1.0	24.11.06	Initial release	Yang Tiesheng	

1. This specification applies to SMD Voltage Controlled Crystal Oscillator with a frequency of 32.768MHz.

2. Electrical characteristics

PARAMETER	SYMBOL	CONDITIONS	MIN	TYP	MAX	UNIT
Nominal Frequency				32.768		MHz
Oscillation Mode		Fund.				
Operating Temperature	TA	–	-40	25	85	℃
Storage Temperature	TSTG	–	-55		125	℃
Total Stability		See Note 1	-50		50	ppm
Operating Supply Voltage	VDD	±10%		3.3		V
Current Consumption	Icc		-		10	mA
Standby Function		Internal Pull Up	YES			
Output Type			CMOS			
Output Load			15PF			
Output Voltage High			0.9VDD	-	-	V
Output Voltage Low					0.1VDD	V
Rise and Fall Time	Tr/Tf	10%~90%Output Swing			5	nS
Duty Cycle			45		55	%
Phase Jitter	RMS	12kHz to 20MHzBW	-		0.8	pS
Start-up Time		T0 90% of Final Amplitude			5	mS
Control Voltage	VC	–	0		3.3	V
Pull Range			±100			ppm
Modulation Band Width	Fc		15	20		KHZ
VC Pin Input Impedance			5			MΩ
Linearity	Lin	Vc=0 to 3.3V	-10		10	%
Aging		One Year Aging Rate	-3		+3	ppm
		15 Years Aging Rate	-10		+10	ppm
Phase Noise		10Hz	-	-		dBc
		100Hz	-	-		dBc
		1KHz	-	-		dBc
		10KHz	-	-		dBc
		100KHz	-	-		dBc
		1M	-	-		dBc

Note: 1.inclusive of frequency tolerance@25℃ and frequency stability vs.operating temperature range.

3. Construction

3.1 Crystal enclosure seal:

■ Seam seal ☐ resistance weld ☐cold weld

3.2 crystal enclosure medium

☐ nitrogen ■ vacuum ☐ dry air

4.Dimension:

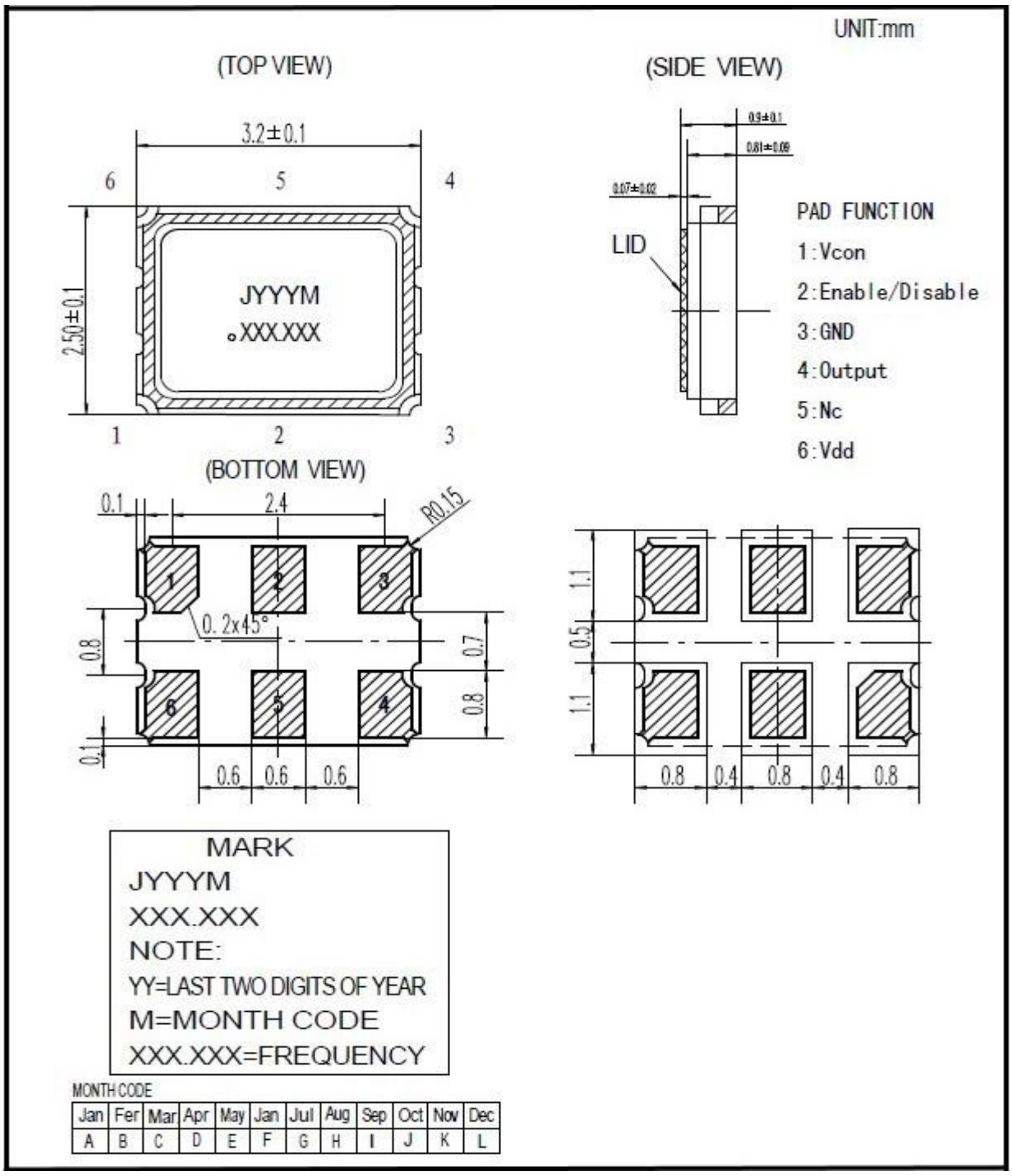

MONTH CODE

Jan	Fer	Mar	Apr	May	Jan	Jul	Aug	Sep	Oct	Nov	Dec
A	B	C	D	E	F	G	H	I	J	K	L

Remark: • **---Pin 1 #**

5. Marking

■ Laser Marking ☐ Ink Marking

6.Inside Structure

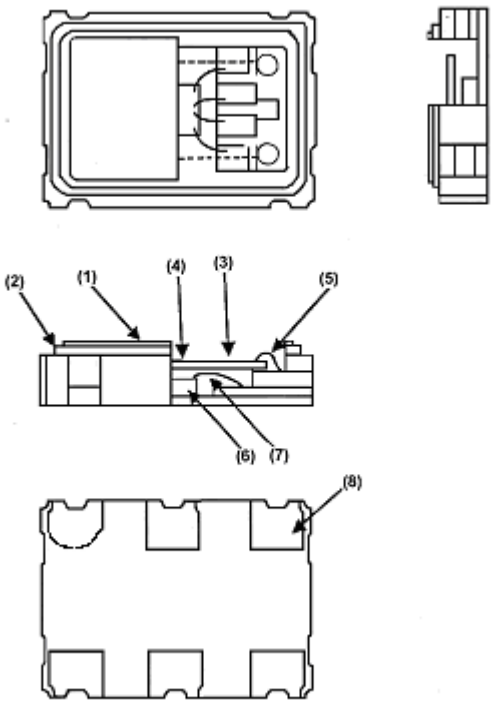

No.	Name	Material
(1)	Can	Fe-Co-Ni
(2)	Base	Ceramic
(3)	Blank	Quartz
(4)	Electrode	Ag
(5)	Epoxy	Silicon +Ag
(6)	IC	Silicon
(7)	Wire	Au
(8)	Soldering pads	Au plated

7.Taping Dimension and Packing Instruction

7.1

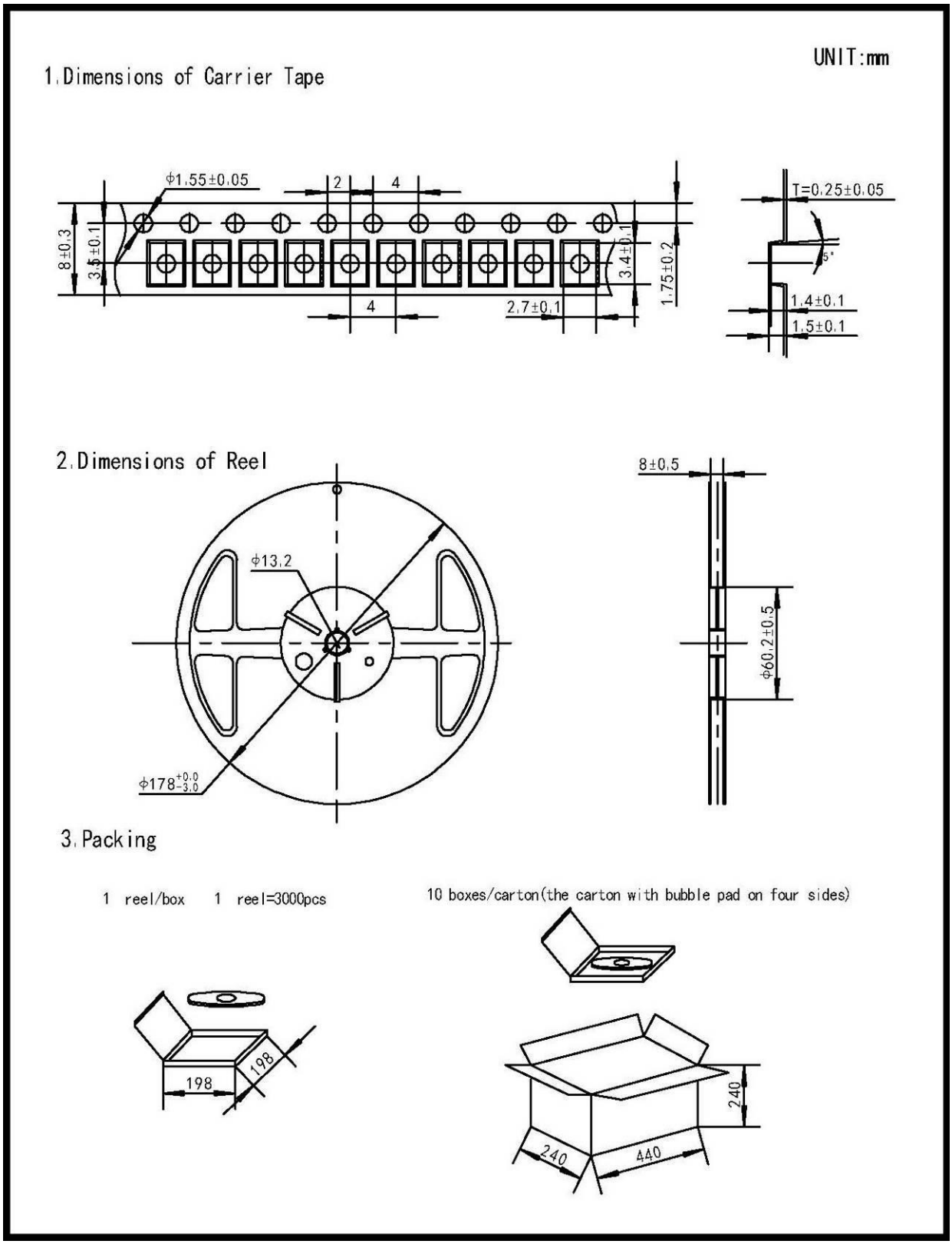

7.2

Release strength of cover tape

It has to between 30g to 90g under following condition.

Pulling direction : 165 deg. to 180 deg.

Speed : 300mm/min.

Otherwise unless specified.

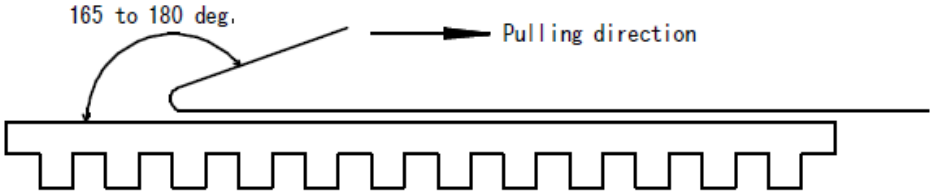

8. Test circuit

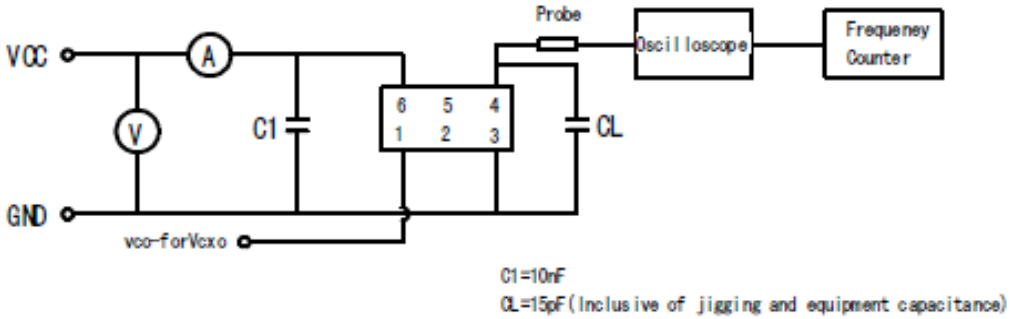

ENABLE TRUTH TABLE

PIN 2 or PIN 5	PIN 4
Logic '1'	Output
Open	Output
Logic '0'	High Imp.

9.Electro-static Discharges

9.1 HBM/ESD and MM/ESD Classilication

HBM/ESD Component Classilication:

HBM/ESD	Voltage Range(V)
1	0~1999
2	2000~3999
3	4000~ABOVE

MM/ESD Component Classilication:

MM/ESD	Voltage Range(V)
A	0~199
B	200~399
C	400~ABOVE

9.2 OSCILLATOR Production For ESD Classilication:

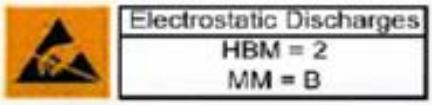

10.Reliability characteristic:

	Item	Condition	Reference	Specifications
10.1	Solderability	Solder bath temperature:260℃ , dwell time:5 seconds, Solder: 100% tin	IEC68-2-20:1979	A new uniform coating of solder shall cover a minimum of 95% of the surface being immersed.
10.2	Resistance to soldering heat	Solder temperature 260+/-3℃,Immersion time:10 S Solder bath composition:100% tin	IEC68-2-58:1989	△F≤+/-5ppm
10.3	Vibration	The entire frequency range: 10Hz to 55Hz ,Amplitude:1.5mm This motion shall be applied for a period of 2 h in each of 3 mutually perpendicular axes(a total of 6h)	IEC 68-2-21:1992	△F≤+/-5ppm
10.4	Drop test	Drop from 75cm height on 3cm hard wooden board for 6 times	IEC68-2-32:1990	△F≤+/-5ppm
10.5	Cold Storage	The quartz crystal unit shall be stored at a temperature of –40+/-3℃ for 1000 h.then it shall be subjected to standard atmospheric conditions for 1h after which measurement shall be made.	IEC68-2-6:1982	△F≤+/-5ppm
10.6	High temperature high humidity storage (steady state)	The quartz crystal unit shall be stored at a temperature of 40+/-2℃ with relative humidity of 95% for 1000h, then it shall be subjected to standard atmospheric conditions for 2h after which measurement shall be made.	IEC60068-2-1:1990	△F≤+/-5ppm
10.7	Thermal shock	The quartz crystal unit shall be subjected to 50 successive Change of temperature cycles. Each as shown in table below ,then it shall be subjected to standard atmospheric conditions for 1h after which measurement shall be made.	IEC68-2-14:1986	△F≤+/-5ppm
10.8	Sealing	Helium leakage detector shall used to measure the leakage rate of gas through any faulty seal. Pressure:500Kpa, duration:120 minutes.	IEC68-2-3:1984	Leakage rate≤ $1*10^{-9}$ Pa.m^3/S
10.9	High temperature Life test	The quartz crystal unit shall be stored at a temperature of 105+/-3℃ for 168h ,then it shall be subjected to standard atmospheric condition for 1h after which measurement shall be made.	IEC60068-2-2:1974	△F≤+/-5ppm

	Temperature	Duration
1	-40+/-3℃	15minutes
2.	105+/-2℃	15minutes
3.	Transition time	Within 10 seconds

11.All products are RoHs compliant

12. Reflow Profile

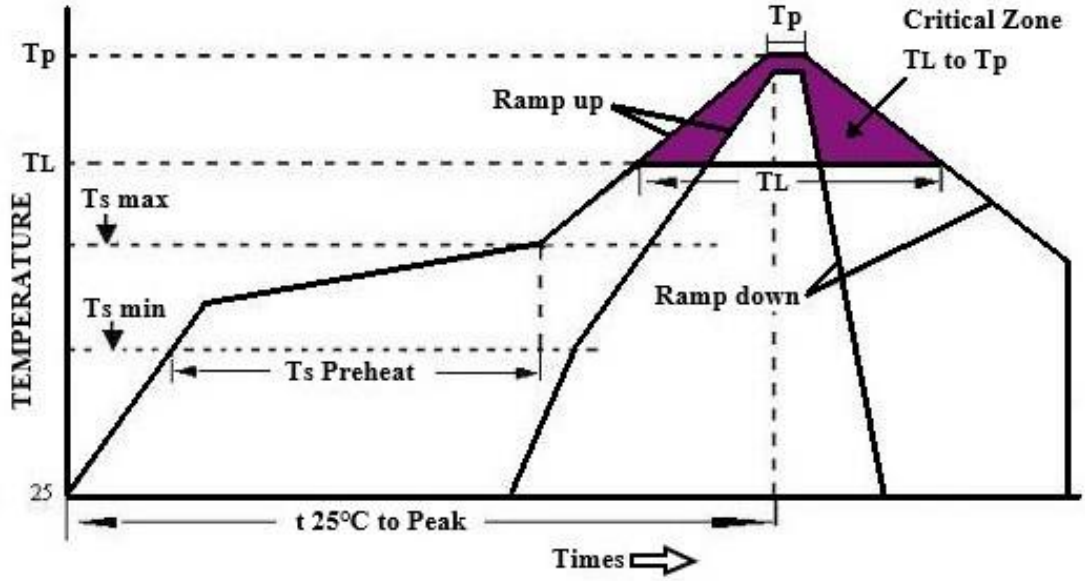

High Temperature Infrared /Convection

Note:Temperature shown are applied to body of device

Ts max to T_L(Ramp-up Rate)	3℃/second max
Preheat Temperature Min(Ts Min) Temperature Typical(Ts Typ) Temperature Max.(Ts Max) Time(ts)	 150℃ 175℃ 200℃ 60-180 seconds
Ram-up Rate(T_L to Tp)	3℃/second Max
Time Maintained Above: --Temperature(T_L) --Time(T_L)	 217℃ 60-150seconds
Peak Temperature (Tp)	260℃ Max for 10 seconds
Time within 5℃ of actual peak(t_p)	20-40 seconds
Ramp-down Rate	6℃/seconds Max
Tune 25℃ to Peak Temperature(t)	8 minutes Max
Moisture Sensitivity Level	Level 1

High Temperature Manual Soldering

Note:Temperature shown are applied to body of device

260℃ Max for 10 seconds Max, 4 times Max