DATASHEET

4 PIN DIP PHOTOTRANSISTOR PHOTOCOUPLER
EL817-G Series

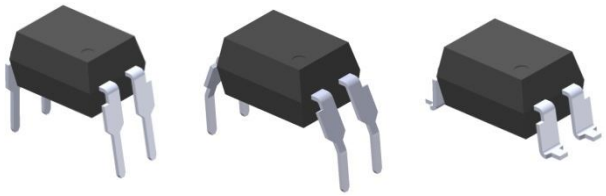

Schematic

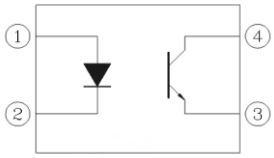

Pin Configuration
1. Anode
2. Cathode
3. Emitter
4. Collector

Features:

- Compliance Halogens Free
  (Br < 900 ppm, Cl < 900 ppm, Br+Cl < 1500 ppm)
- Current transfer ratio
  (CTR: 50~600% at I_F = 5mA, V_{CE} = 5V)
- High isolation voltage between input
  and output (Viso = 5000Vrms)
- Creepage distance > 7.62mm
- Operating temperature up to +110°C
- Compact small outline package
- Compliance with EU REACH.
- The product itself will remain within RoHS compliant version
- UL and cUL approved(No.E214129)
- VDE approved (No.132249)
- SEMKO approved
- NEMKO approved
- DEMKO approved
- FIMKO approved
- CQC approved

Description

The EL817-G series of devices each consist of an infrared emitting diodes,
optically coupled to a phototransistor detector.
They are packaged in a 4-pin DIP package and available in wide-lead spacing and SMD option.

Applications

- Programmable controllers
- System appliances, measuring instruments
- Telecommunication equipments
- Home appliances, such as fan heaters, etc.
- Signal transmission between circuits of different potentials and impedances

Copyright © 2010, Everlight All Rights Reserved. Release Date: Aug 16, 2019. Issue No : DPC-0000011 Rev.12
Ver.:12 Release Date:08/22/2019 狀態:Approved(正式發行)

Absolute Maximum Ratings (Ta=25˚C)

	Parameter	Symbol	Rating	Unit
Input	Forward current	I_F	60	mA
	Peak forward current (1us, pulse)	I_{FP}	1	A
	Reverse voltage	V_R	6	V
	Power dissipation	P_D	100	mW
	Derating factor (above T_a = 100°C)		2.9	mW/˚C
Output	Power dissipation	P_C	150	mW
	Derating factor (above T_a = 100˚C)		5.8	mW/˚C
	Collector current	I_C	50	mA
	Collector-Emitter voltage	V_{CEO}	80	V
	Emitter-Collector voltage	V_{ECO}	7	V
Total Power Dissipation		P_{TOT}	200	mW
Isolation Voltage*1		V_{ISO}	5000	V rms
Operating Temperature		T_{OPR}	-55 to 110	°C
Storage Temperature		T_{STG}	-55 to 125	°C
Soldering Temperature*2		T_{SOL}	260	°C

Notes:
*1 AC for 1 minute, R.H.= 40 ~ 60% R.H. In this test, pins 1, 2 are shorted together, and pins 3, 4 are shorted together.
*2 For 10 seconds

Copyright © 2010, Everlight All Rights Reserved. Release Date: Aug 16, 2019. Issue No : DPC-0000011 Rev.12
Ver.:12 Release Date:08/22/2019 狀態:Approved(正式發行)

Electro-Optical Characteristics (Ta=25˚C unless specified otherwise)

Input

Parameter	Symbol	Min.	Typ.	Max.	Unit	Condition
Forward Voltage	V_F	-	1.2	1.4	V	I_F = 20mA
Reverse Current	I_R	-	-	10	μA	V_R = 4V
Input capacitance	C_{in}	-	30	250	pF	V = 0, f = 1kHz

Output

Parameter	Symbol	Min	Typ.	Max.	Unit	Condition
Collector-Emitter dark current	I_{CEO}	-	-	100	nA	V_{CE} = 20V, I_F = 0mA
Collector-Emitter breakdown voltage	BV_{CEO}	80	-	-	V	I_C = 0.1mA
Emitter-Collector breakdown voltage	BV_{ECO}	7	-	-	V	I_E = 0.1mA

Transfer Characteristics

Parameter		Symbol	Min	Typ.	Max.	Unit	Condition
Current Transfer ratio	EL817	CTR	50	-	600	%	I_F = 5mA ,V_{CE} = 5V
	EL817A		80	-	160		
	EL817B		130	-	260		
	EL817C		200	-	400		
	EL817D		300	-	600		
	EL817X		100	-	200		
	EL817Y		150	-	300		
Collector-Emitter saturation voltage		$V_{CE(sat)}$	-	0.1	0.2	V	I_F = 20mA ,I_C = 1mA
Isolation resistance		R_{IO}	5×10^{10}	-	-	Ω	V_{IO} = 500Vdc, 40~60% R.H.
Floating capacitance		C_{IO}	-	0.6	1.0	pF	V_{IO} = 0, f = 1MHz
Cut-off frequency		fc	-	80	-	kHz	V_{CE} = 5V, I_C = 2mA R_L = 100Ω, -3dB
Rise time		t_r	-	6	18	μs	V_{CE} = 2V, I_C = 2mA, R_L = 100Ω
Fall time		t_f	-	8	18	μs	

* Typical values at T_a = 25°C

Copyright © 2010, Everlight All Rights Reserved. Release Date: Aug 16, 2019. Issue No : DPC-0000011 Rev.12
Ver.:12 Release Date:08/22/2019 狀態:Approved(正式發行)

Typical Electro-Optical Characteristics Curves

Figure 1. Forward Current vs Forward Voltage

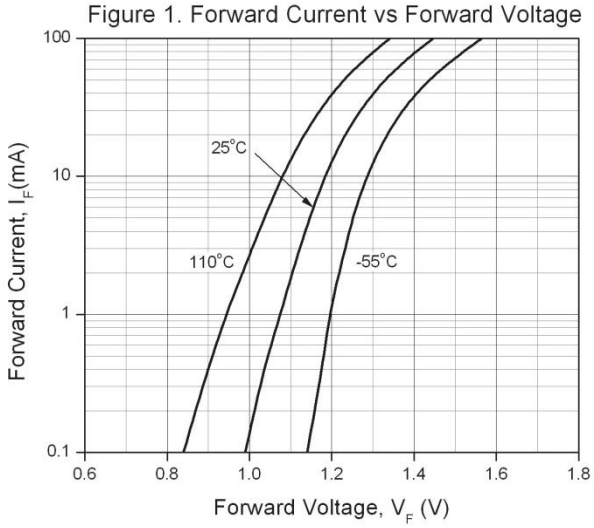

Figure 2. Normalized Current Transfer Ratio vs Forward Current

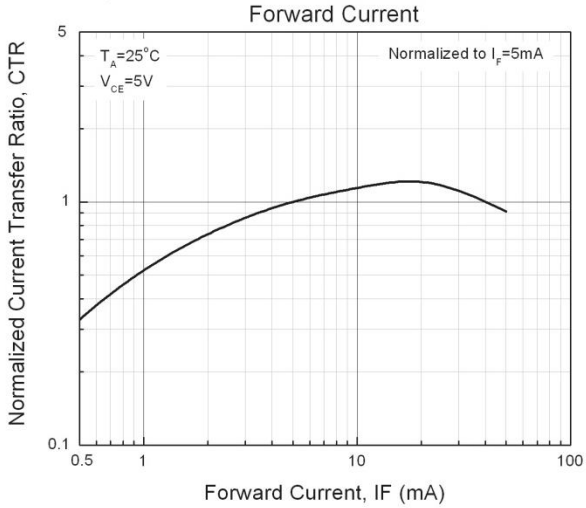

Figure 3. Current Transfer Ratio vs Ambient Temperature

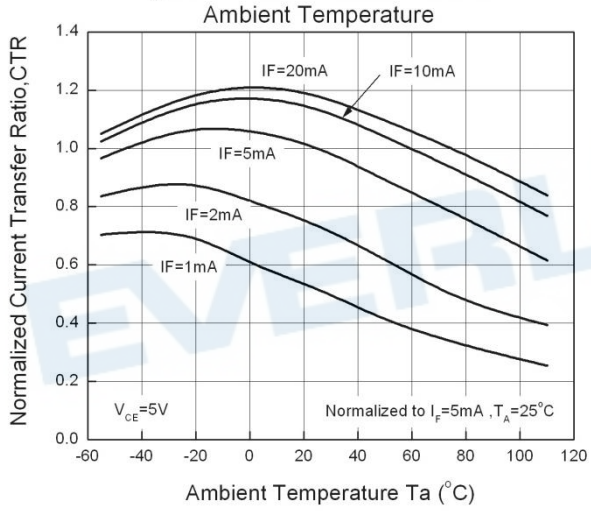

Figure 4. Dark Current vs Ambient Temperature

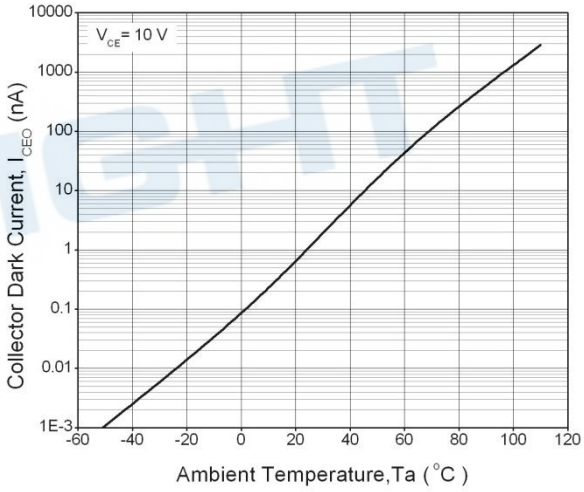

Figure 5. Collector-Emitter Saturation Voltage vs Collector Current

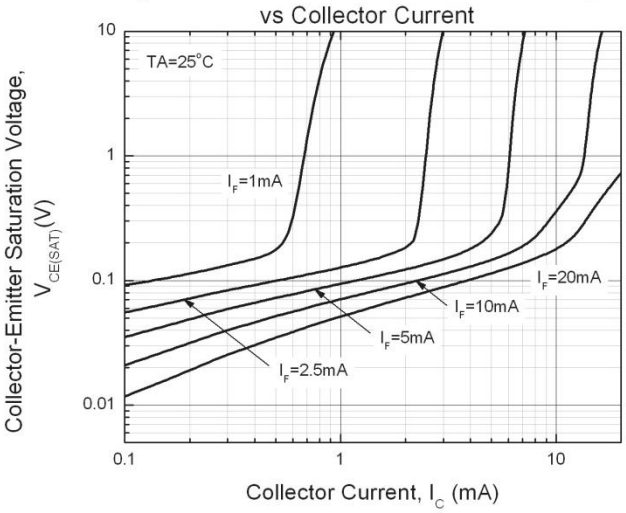

Figure 6. Switching Time vs Load Resistance

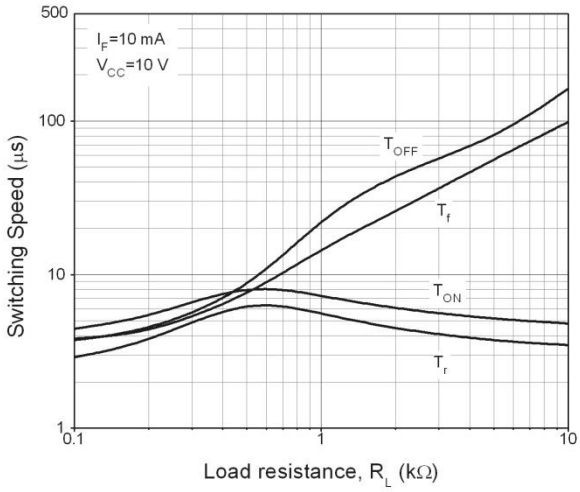

Copyright © 2010, Everlight All Rights Reserved. Release Date: Aug 16, 2019. Issue No : DPC-0000011 Rev.12
Ver.:12 Release Date:08/22/2019 狀態:Approved(正式發行)

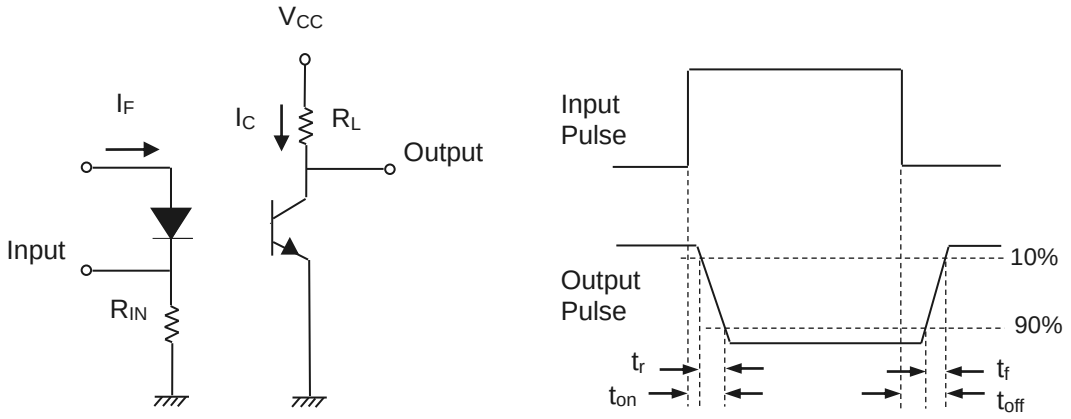

Figure 7. Switching Time Test Circuit & Waveforms

EVERLIGHT

Copyright © 2010, Everlight All Rights Reserved. Release Date: Aug 16, 2019. Issue No : DPC-0000011 Rev.12
Ver.:12 Release Date:08/22/2019 狀態:Approved(正式發行)

Order Information

Part Number

EL817X(Y)(Z)-FVG

Note

X = Lead form option (S1, S2, M or none)
Y = CTR Rank (A, B, C, D, X , Y or none)
Z = Tape and reel option (TU, TD or none)
F = Lead frame option (F: Iron, None: copper)
V = VDE safety (optional)
G = Halogens free

Option	Description	Packing quantity
None	Standard DIP-4	100 units per tube
M	Wide lead bend (0.4 inch spacing)	100 units per tube
S1 (TU)	Surface mount lead form (low profile) + TU tape & reel option	1500 units per reel
S1 (TD)	Surface mount lead form (low profile) + TD tape & reel option	1500 units per reel
S2 (TU)	Surface mount lead form (low profile) + TU tape & reel option	2000 units per reel
S2 (TD)	Surface mount lead form (low profile) + TD tape & reel option	2000 units per reel

Copyright © 2010, Everlight All Rights Reserved. Release Date: Aug 16, 2019. Issue No : DPC-0000011 Rev.12

Ver.:12 Release Date:08/22/2019 状态:Approved(正式发行)

Package Dimension (Dimensions in mm)

Standard DIP Type

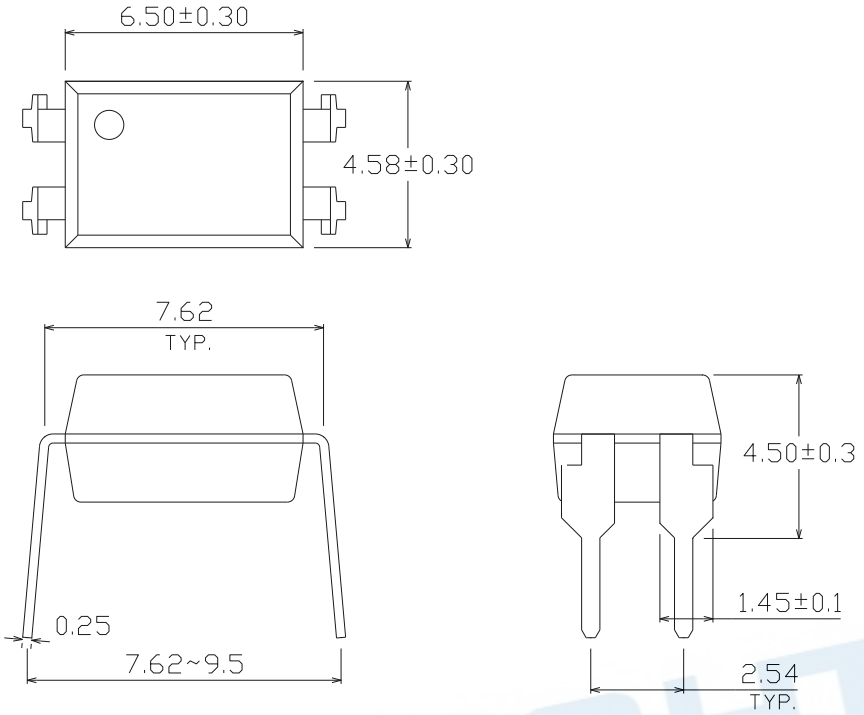

Option M Type

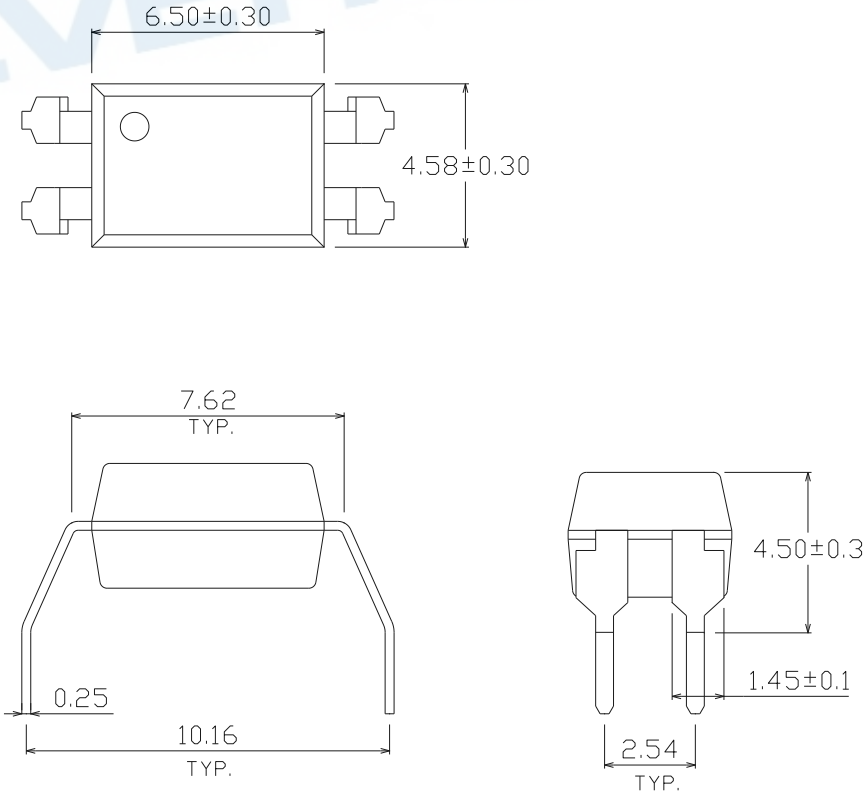

Copyright © 2010, Everlight All Rights Reserved. Release Date: Aug 16, 2019. Issue No : DPC-0000011 Rev.12
Ver.:12 Release Date:08/22/2019 狀態:Approved(正式發行)

Option S1 Type

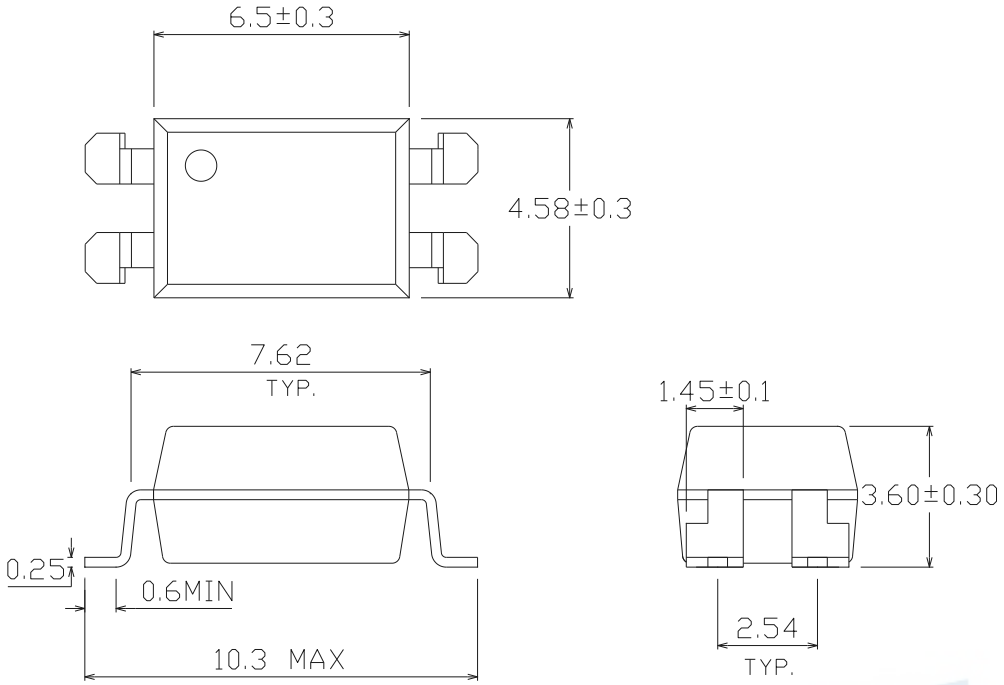

Option S2 Type

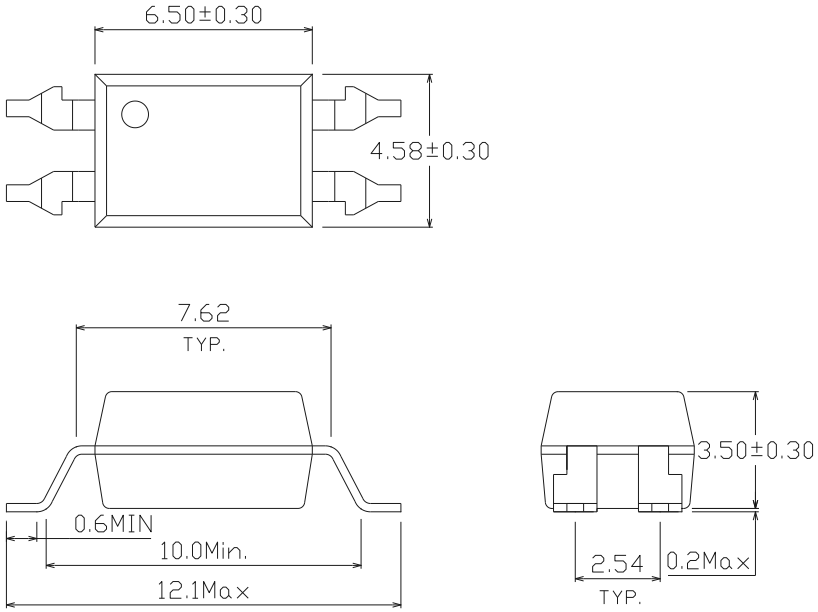

Copyright © 2010, Everlight All Rights Reserved. Release Date: Aug 16, 2019. Issue No : DPC-0000011 Rev.12
Ver.:12 Release Date:08/22/2019 狀態:Approved(正式發行)

Recommended pad layout for surface mount leadform

For S1 option

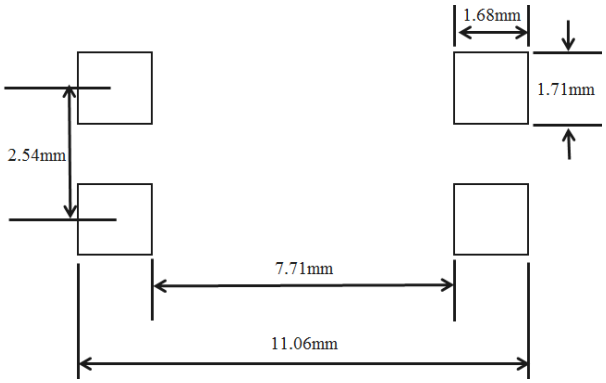

For S2 option

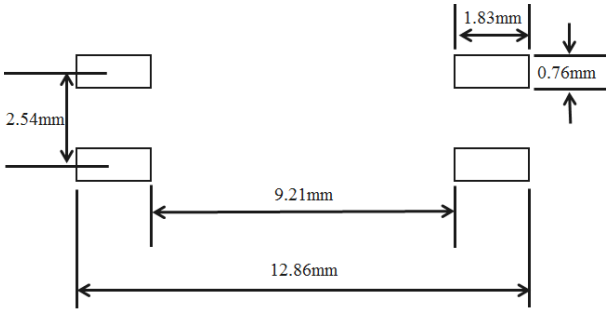

Notes

Suggested pad dimension is just for reference only.
Please modify the pad dimension based on individual need.

Device Marking

Notes

EL	denotes EVERLIGHT
817	denotes Device Number
G	denotes Green part
R	denotes CTR Rank (A, B, C, D , X , Y or none)
Y	denotes 1 digit Year code
WW	denotes 2 digit Week code
V	denotes VDE (optional)

Copyright © 2010, Everlight All Rights Reserved. Release Date: Aug 16, 2019. Issue No : DPC-0000011 Rev.12
Ver.:12 Release Date:08/22/2019 状态:Approved(正式发行)

Tape & Reel Packing Specifications

Option TD

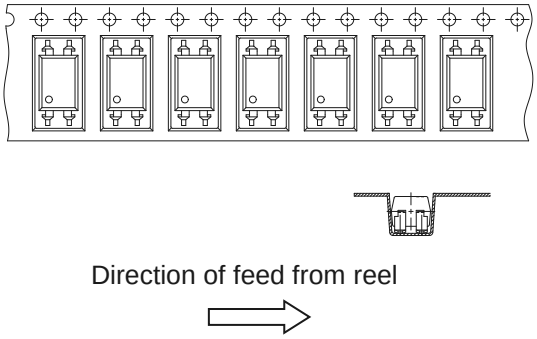

Option TU

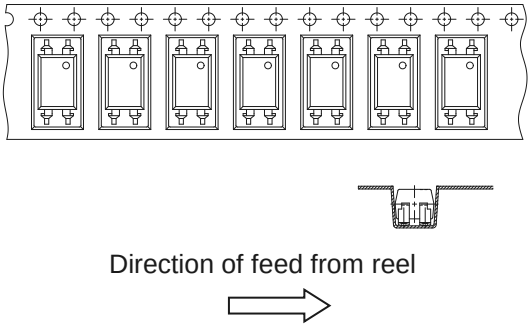

Tape dimensions

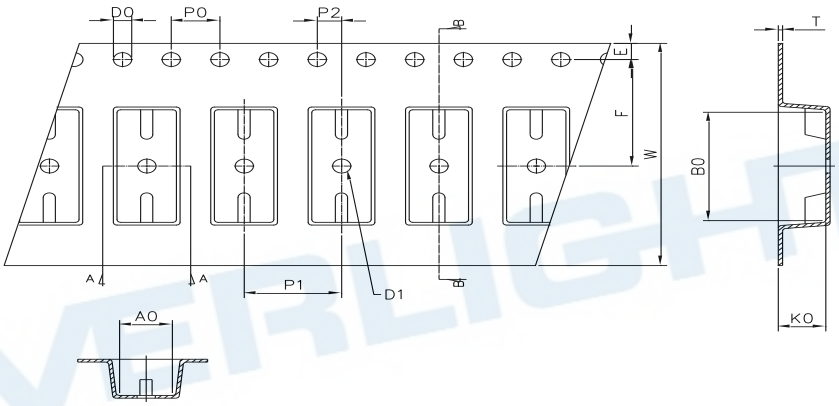

Dimension No.	Ao	Bo	Do	D1	E	F
Dimension (mm) S1	4.90±0.1	10.40±0.1	1.5±0.1	1.50±0.1	1.75±0.1	7.50±0.1
Dimension (mm) S2	4.88±0.1	12.55±0.1	1.5±0.1	1.50±0.1	1.75±0.1	11.5±0.1
Dimension No.	**Po**	**P1**	**P2**	**t**	**W**	**Ko**
Dimension (mm) S1	4.00±0.1	8.00±0.1	2.00±0.1	0.40±0.1	16.00±0.3	4.60±0.1
Dimension (mm) S2	4.00±0.1	8.00±0.1	2.00±0.1	0.40±0.1	24.00±0.3	4.00±0.1

Copyright © 2010, Everlight All Rights Reserved. Release Date: Aug 16, 2019. Issue No : DPC-0000011 Rev.12
Ver.:12 Release Date:08/22/2019 狀態:Approved(正式發行)

Precautions for Use

1. Soldering Condition

1.1 (A) Maximum Body Case Temperature Profile for evaluation of Reflow Profile

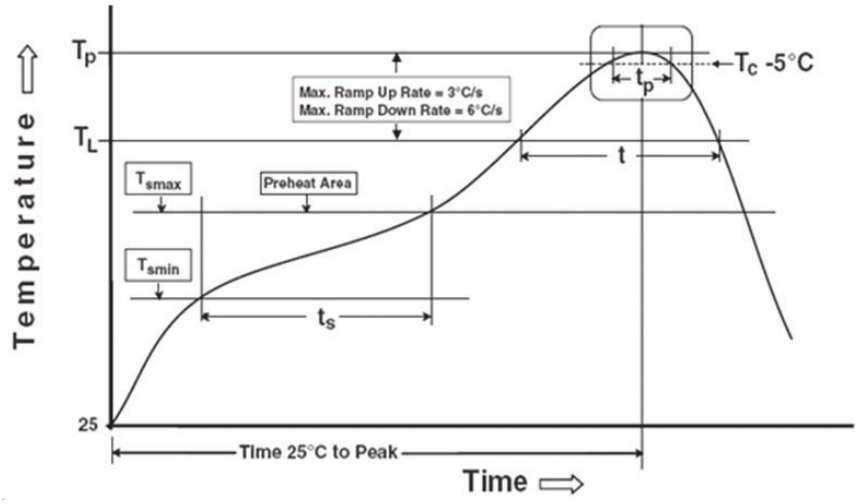

Note:	Reference: IPC/JEDEC J-STD-020D
Preheat	
Temperature min (T_{smin})	150 °C
Temperature max (T_{smax})	200°C
Time (T_{smin} to T_{smax}) (t_s)	60-120 seconds
Average ramp-up rate (T_{smax} to T_p)	3 °C/second max
Other	
Liquidus Temperature (T_L)	217 °C
Time above Liquidus Temperature (t_L)	60-100 sec
Peak Temperature (T_P)	260°C
Time within 5 °C of Actual Peak Temperature: T_P - 5°C	30 s
Ramp- Down Rate from Peak Temperature	6°C /second max.
Time 25°C to peak temperature	8 minutes max.
Reflow times	3 times

.

Copyright © 2010, Everlight All Rights Reserved. Release Date: Aug 16, 2019. Issue No : DPC-0000011 Rev.12
Ver.:12 Release Date:08/22/2019 狀態:Approved(正式發行)

DISCLAIMER

1. Above specification may be changed without notice. EVERLIGHT will reserve authority on material change for above specification.
2. The graphs shown in this datasheet are representing typical data only and do not show guaranteed values.
3. When using this product, please observe the absolute maximum ratings and the instructions for use outlined in these specification sheets. EVERLIGHT assumes no responsibility for any damage resulting from use of the product which does not comply with the absolute maximum ratings and the instructions included in these specification sheets.
4. These specification sheets include materials protected under copyright of EVERLIGHT. Reproduction in any form is prohibited without the specific consent of EVERLIGHT.
5. This product is not intended to be used for military, aircraft, automotive, medical, life sustaining or life saving applications or any other application which can result in human injury or death. Please contact authorized Everlight sales agent for special application request.
6. Statements regarding the suitability of products for certain types of applications are based on Everlight's knowledge of typical requirements that are often placed on Everlight products in generic applications. Such statements are not binding statements about the suitability of products for a particular application. It is the customer's responsibility to validate that a particular product with the properties described in the product specification is suitable for use in a particular application. Parameters provided in datasheets and/or specifications may vary in different applications and performance may vary over time. All operating parameters, including typical parameters, must be validated for each customer application by the customer's technical experts. Product specifications do not expand or otherwise modify Everlight's terms and conditions of purchase, including but not limited to the warranty expressed therein.

Copyright © 2010, Everlight All Rights Reserved. Release Date: Aug 16, 2019. Issue No : DPC-0000011 Rev.12

Ver.:12 Release Date:08/22/2019 狀態:Approved(正式發行)