REV.	ECN NO OR DESCRIPTION	REVISED	DATE
4	将Logo位置从侧面移到中间位置，平衡磁吸授力，避免发生翘起变形。	Kevin	2019.09.05
5	调整端子结构，降低出卡摩擦力，参考ECN-20209051	Kevin	2020.08.04

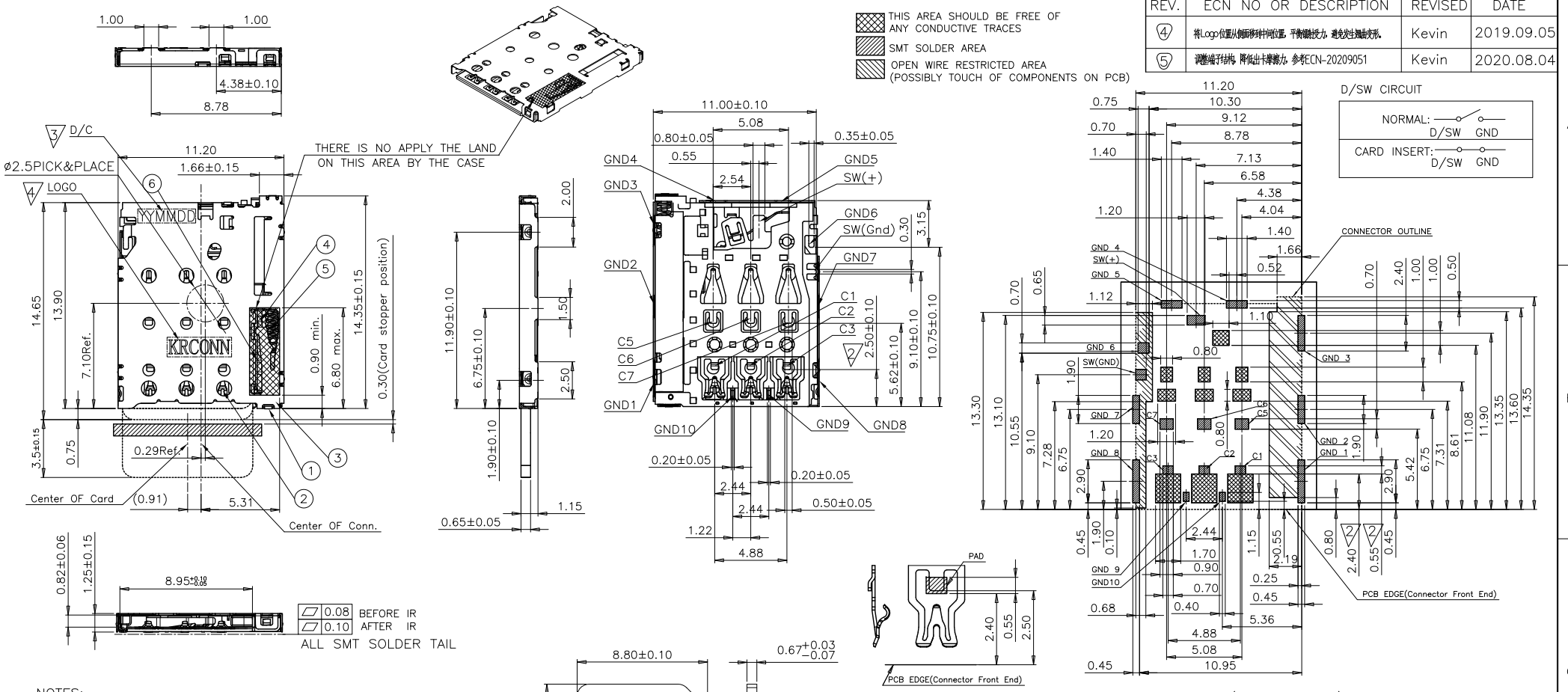

NOTES:
1. FINISH
   1-1. CONTACT:
      CONTACT AREA: Au 1~3u" Min.
      GOLD FLASH PLATING ON SOLDER AREA
   1-2. SHELL:
      SOLDER AREA: Gold flash
2. ELECTRICAL REQUIREMENTS:
   2-1. CURRENT RATING: 0.5A PER PIN.
   2-2. CONTACT RESISTANCE: 50 mOhm MAX.
   2-3. INSULATION RESISTANCE: 1000 MOhm MIN.200 VDC FOR 1 MINUTE.
   2-4. WITHSTANDING STRENGTH: 500V AC FOR 1 MINUTE.
3. MECHANICAL REQUIREMENTS:
   DURABILITY: 3,000 CYCLES MIN.
4. ENVIRONMENT REQUIREMENTS:
   4-1. OPERATING TEMP.: -30°C TO +85°C
   4-2. STORAGE TEMPERATURE: -40°C TO +85°C
5. RECOMMENDED PROCESS DONDITION:
   IR-REFLOW, PEAK TEMPERATURE AND TIME: 250°C, 5~10 S.

PART No.:

NS 0 PP - 12 00 06- 02 G

- Nano SIM CON.
- 0=WITHOUT POST
- PP=PUSH PUSH
- 12:HEIGHT 1.25mm
- 00=NORMAL TYPE.(ON PCB)
- Pin NO. 6=6Pin
- 02=Product Order
- G=gold flash

Connector Pin Assignment

No.	Pin Name	Description
1	C1	Vcc of SIM
2	C2	RST of SIM
3	C3	CLK of SIM
4	C5	GND of SIM
5	C6	Vpp of SIM
6	C7	I/O of SIM
7	SW	Detection Switch

ITEM	DESCRIPTION	MATERIAL	FINSH	Q'TY
6	HOOK	SUS304	NO PLATING	1
5	SPRING	SUS	NO PLATING	1
4	SLIDE	PA46	GLASS FILLED(OR EQUAL), UL 94V-0, BLACK	1
3	SHELL	SUS301-H T=0.10	GOLD FLASH PLATED ON SOLDER TAIL AREA. NICKEL 30~100u" UNDER PLATED OVER ALL	1
2	TERMINAL	C5240-SH T=0.10	GOLD PLATED ON CONTACT AREA"A" SEE "PLATED CODE NOTE" GOLD FLASH PLATED ON CONTACT AREA"B" AND SOLDER TAIL AREA NICKEL 50~150u" UNDER PLATED OVER ALL	1
1	HOUSING	LCP	GLASS FILLED(OR EQUAL), UL 94V-0, BLACK	1

UNLESS OTHERWISE SPECIFED TOLERANCES

DECIMALS: X :±0.5, X.X :±0.20, X.XX :±0.10

ANGLES: X :±2°, X.X :±1°

深圳市精睿兴业科技有限公司
SHENZHEN KRCONN TECHNOLOGY CO. , LTD

TITLE	6Pin 1.25H PUSH PUSH Nano SIM CARD CONN.			
DWN	ALLEN	PART NO. NSOPP-120006-02G		
CHKD	KEVIN	SCALE:1:1	UNIT: mm	
APVD	ERIC.W	SIZE: A3	SHEET:1OF 1	REV: A5

CUSTOMER COPY

REV.	ECN NO OR DESCRIPTION	REVISED	DATE
1	PROPOSE ONLY	ALLEN	2015.06.04

PRODUCT PACKAGING DIRECTION

CUSTOMER TO USE DIRECTION

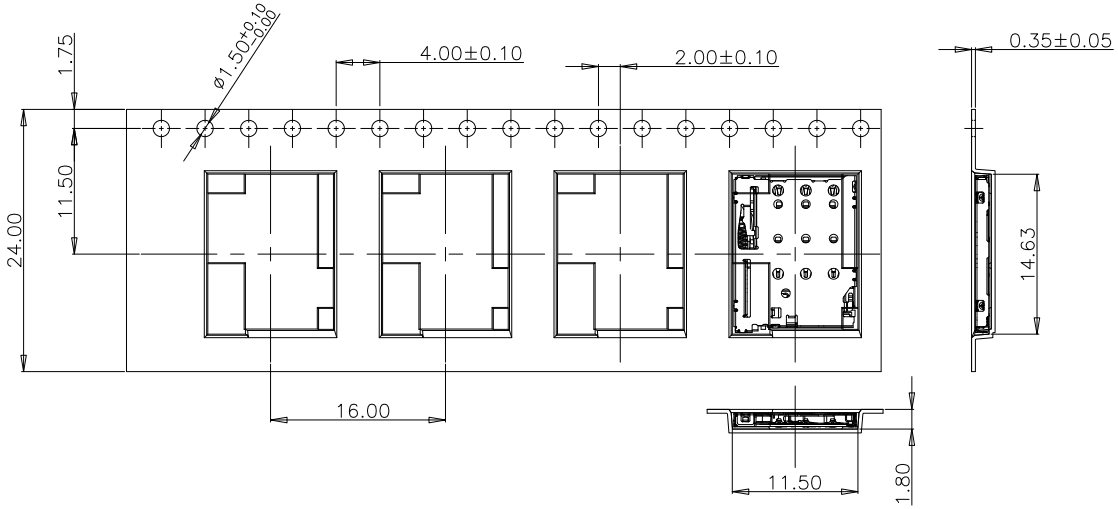

产品料号	一盘产品数量	卷盘数量(N)	一箱产品数量
CONN. PART NO.	CONN. QTY./REEL	REEL QTY./CARTON	CONN. QTY./CARTON
NS0PP-120006-02G	2000	8	16000 PCS

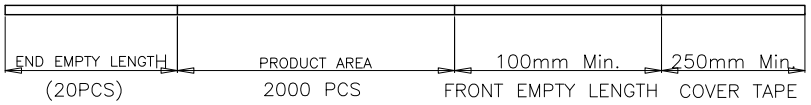

USER DIRECTION OF FEEDING

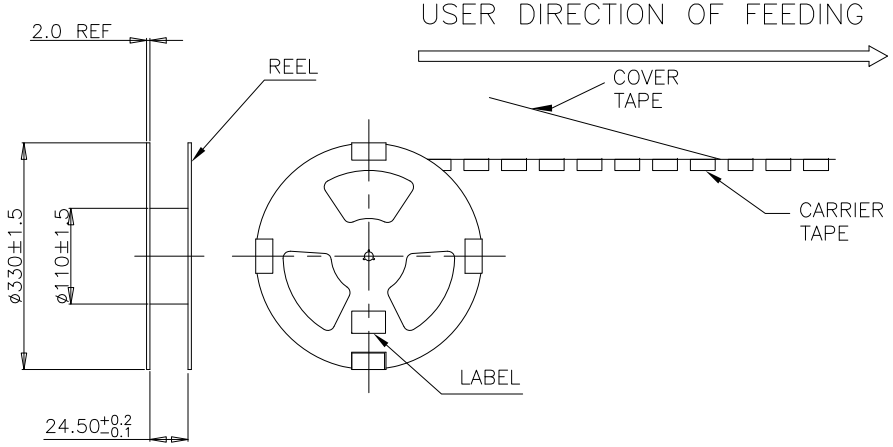

1.材料(Material): PET,THICKNESS:0.35±0.05mm,COLOUR:TRANSPARENT
2.产品/卷盘/数量表(PRODUCT/REEL/QTY TABLE)
3.包装ESD要求：10^4～10^9 Ω(包括载带，盖带，卷盘)

UNLESS OTHERWISE SPECIFED TOLERANCES					
DECIMALS:		ANGLES:			
X	:±0.5	X	:±2°		
X.X	:±0.20	X.X	:±1°		
X.XX	:±0.10				

深圳市精睿兴业科技有限公司
SHENZHEN KRCONN TECHNOLOGY CO. , LTD

TITLE	6Pin 1.25H PUSH PUSH Nano SIM CARD CONN.			
DWN	ALLEN	PART NO. NS0PP-120006-02G		
CHKD	KEVIN	SCALE:1:1	UNIT: mm	
APVD	ERIC.W	SIZE: A3	SHEET:1OF 1	REV: A2

CUSTOMER COPY