SN74LVC1G32

Single 2-Input Positive-OR Gate

Description

This single 2-input positive-OR gate is designed for 1.65-V to 5.5-V Vcc operation.

The SN74LVC1G32 device performs the Boolean function $Y=\overline{A \cdot B}$ or $Y=\overline{A}+\overline{B}$ in positive logic.

The CMOS device has high output drive while maintaining low static power dissipatior over a broad Vcc operating range.

Features

- Supports 5V V_{CC} operation
- Inputs accept voltages to 5.5 V
- Provides down translation to V_{CC}
- Low power consumption,10-μA Max I_{CC}
- ±24-mA outputdrive at 3.3 V
- Ioff supports live insertion,partial -power -down mode, and back drive protection

Applications

- Active noise cancellation(ANC)
- Barcode scanner
- Blood pressuremonitor
- CPAP machine
- Fingerprint biometrics
- HVAC:heating,ventilating,and air conditioning
- Network-attached storage(NAS)
- Server motherboard andPSU
- Software defined radio(SDR)
- Video communications system

Functional Block Diagram

Ordering Information

Orderable Device	Package	Packing	Package Qty
SN74LVC1G32DBVR	SOT-23-5L	Tape & Reel	3000
SN74LVC1G32DCKR	SOT-353	Tape & Reel	4000

Pinning and Pin Functions

PIN No.	NAME	I/O	FUNCTION
1	A	I	Input
2	B	I	Input
3	GND		Ground
4	Y	O	Output
5	VCC		Supply Voltage

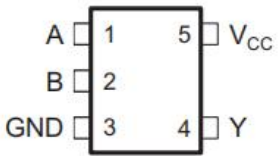

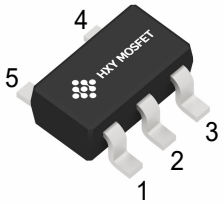

SOT-23-5L/SOT-353

Absolute Maximum Ratings

Symbol	Parameter	MIN	MAX	Unit
V_{CC}	Supply Voltage	-0.5	6.5	V
V_I	Input Voltage Range	-0.5	6.5	V
V_O	Voltage Range(applied to any output in the high-impedance or power-off state)(1)	-0.5	6.5	V
	Voltage Range(applied to any output in the high or low state)	-0.5	VCC + 0.5	V
I_O	Continuous Output Current		±50	mA
T_J	Junction Temperature		125	℃
T_{OP}	Operating Temperature	-40	85	℃

Absolute maximum ratings are those values beyond which the device could be permanently damaged,These are stress ratings only,which do not imply functional operation of the device at these or any other conditions beyond those indicated under normal operating conditions.

(1) The input and output negative-voltage ratings may be exceeded if the input and output current ratings are observed.

Electrical Characteristics

(T_a=25℃, voltages are referenced to GND (ground=0V), unless otherwise specified)

Symbol	Parameter	Test Condition	MIN	TYP	MAX	Unit
V_{IH}	High Level Input Voltage	V_{CC}=1.65V to 1.95V	0.65V_{CC}	--	--	V
		V_{CC}=2.3V to 2.7V	1.7	--	--	V
		V_{CC}=3V to 5.5V	0.7V_{CC}	--	--	V
V_{IL}	Low Level Input Voltage	V_{CC}=1.65V to 1.95V	--	--	0.35V_{CC}	V
		V_{CC}=2.3V to 2.7V	--	--	0.7	V
		V_{CC}=3V to 3.6V	--	--	0.8	V
		V_{CC}=4.5V to 5.5V	--	--	0.3V_{CC}	V
I_{OH}	High Level Output Current	V_{CC}=1.65V	--	--	-4	mA
		V_{CC}=2.3V	--	--	-8	mA
		V_{CC}=3V	--	--	-16	mA
			--	--	-24	mA
		V_{CC}=4.5V	--	--	-32	mA
I_{OL}	Low Level Output Current	V_{CC}=1.65V	--	--	4	mA
		V_{CC}=2.3V	--	--	8	mA
		V_{CC}=3V	--	--	16	mA
			--	--	24	mA
		V_{CC}=4.5V	--	--	32	mA

Symbol	Parameter	Test Condition	MIN	TYP	MAX	Unit
V_{OH}	High Level Output Voltage	V_{CC}=1.65V to 5.5V,I_{OH}=-100uA	V_{CC}-0.1	--	--	V
		V_{CC}=1.65V,I_O=-4mA	--	1.47	--	V
		V_{CC}=2.3V,I_O=-8mA	--	2.15	--	V
		V_{CC}=3V,I_O=-16mA	--	2.8	--	V
		V_{CC}=3V,I_O=-24mA	--	2.7	--	V
		V_{CC}=4.5V,I_O=-32mA	--	4.2	--	V
V_{OL}	Low Level Output Voltage	V_{CC}=1.65V to 5.5V,I_{OH}=100uA	--	--	0.1	V
		V_{CC}=1.65V,I_O=4mA	--	0.09	--	V
		V_{CC}=2.3V,I_O=8mA	--	0.1	--	V
		V_{CC}=3V,I_O=16mA	--	0.15	--	V
		V_{CC}=3V,I_O=24mA	--	0.25	--	V
		V_{CC}=4.5V,I_O=32mA	--	0.25	--	V
I_I	A or $\overline{OE}$ Inputs Leakage Current	V_{CC}=0 to 5.5V,V_I=V_{CC} or GND	--	0	±1	uA
I_{off}	Power Off Leakage Current	V_{CC}=0V,V_I or V_O=5.5V	--	0	±10	uA
I_{CC}	Quiescent Supply Current	V_{CC}=1.65V to 5.5V,V_I=V_{CC} or GND,I_O=0	--	0	10	uA
ΔI_{CC}	Additional Quiescent Supply Current Per Input Pin	V_{CC}=3V to 5.5V,one input at V_{CC} -0.6V,Other inputs at V_{CC} or GND	--	--	500	uA

Application Information

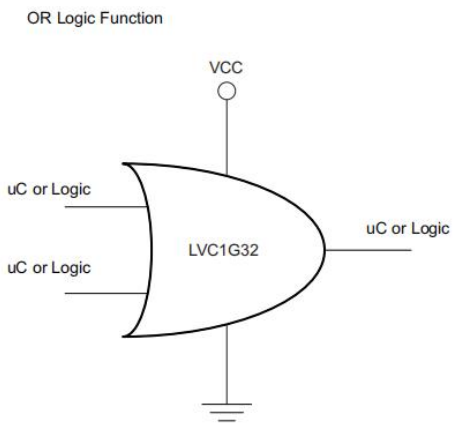

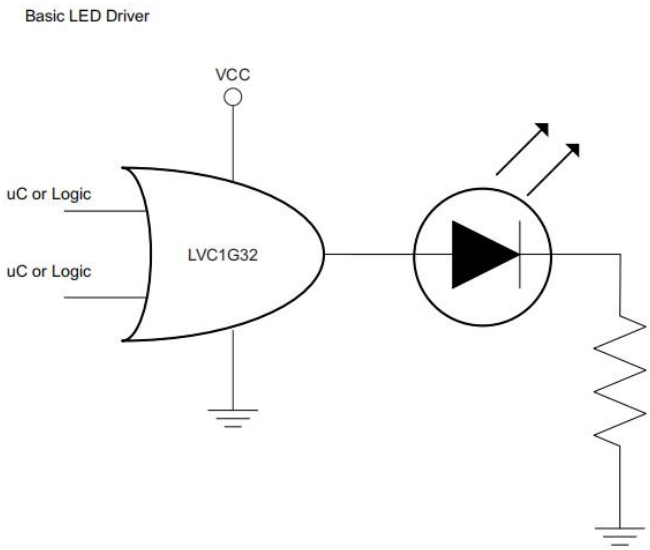

Package Outline
SOT-23-5L

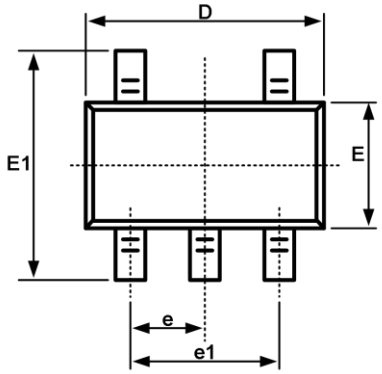

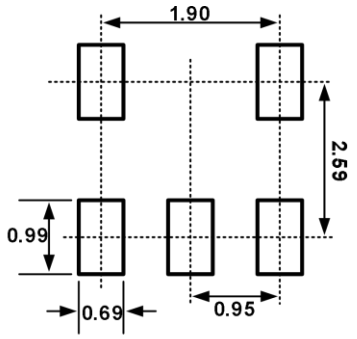

Recommended Land Pattern (Unit: mm)

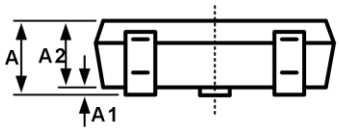

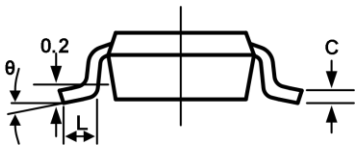

Symbol	Dimensions In Millimeters		Dimensions In Inches	
	Min	Max	Min	Max
A	1.050	1.250	0.041	0.049
A1	0.000	0.100	0.000	0.004
A2	1.050	1.150	0.041	0.045
b	0.300	0.500	0.012	0.020
c	0.100	0.200	0.004	0.008
D	2.820	3.020	0.111	0.119
E	1.500	1.700	0.059	0.067
E1	2.650	2.950	0.104	0.116
e	0.950BSC		0.037BSC	
e1	1.800	2.000	0.071	0.079
L	0.300	0.600	0.012	0.024
L1	0.600REF		0.024REF	
θ	0°	8°	0°	8°

Package Outline
SOT-353

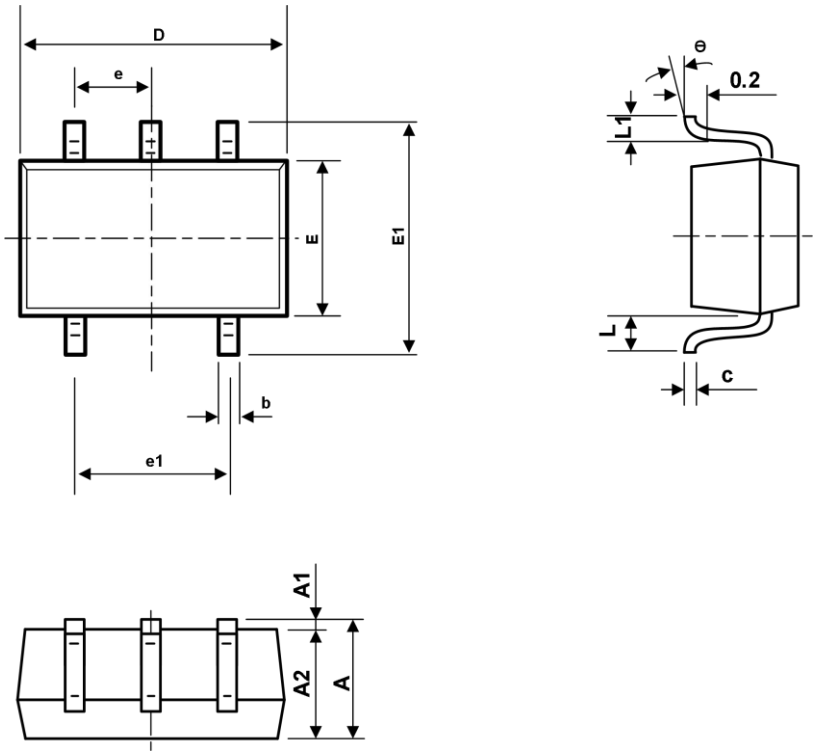

symbol	Dimension In Millimeters		Dimensions In Inches	
	Min	Max	Min	Max
A	0.900	1.100	0.035	0.043
A1	0.000	0.100	0.000	0.004
A2	0.900	1.000	0.035	0.039
b	0.150	0.350	0.006	0.014
c	0.110	0.175	0.004	0.007
D	2.000	2.200	0.079	0.087
E	1.150	1.350	0.045	0.053
E1	2.150	2.450	0.085	0.096
e	0.650TYP		0.026TYP	
e1	1.200	1.400	0.047	0.055
L	0.525REF		0.021REF	
L1	0.260	0.460	0.010	0.018
θ	0°	8°	0°	8°

Attention

■ Any and all HUA XUAN YANG ELECTRONICS products described or contained herein do not have specifications that can handle applications that require extremely high levels of reliability, such as life-support systems, aircraft's control systems, or other applications whose failure can be reasonably expected to result in serious physical and/or material damage. Consult with your HUA XUAN YANG ELECTRONICS representative nearest you before using any HUA XUAN YANG ELECTRONICS products described or contained herein in such applications.

■ HUA XUAN YANG ELECTRONICS assumes no responsibility for equipment failures that result from using products at values that exceed, even momentarily, rated values (such as maximum ratings, operating condition ranges, or other parameters) listed in products specifications of any and all HUA XUAN YANG ELECTRONICS products described or contained herein.

■ Specifications of any and all HUA XUAN YANG ELECTRONICS products described or contained herein stipulate the performance, characteristics, and functions of the described products in the independent state, and are not guarantees of the performance, characteristics, and functions of the described products as mounted in the customer's products or equipment. To verify symptoms and states that cannot be evaluated in an independent device, the customer should always evaluate and test devices mounted in the customer's products or equipment.

■ HUA XUAN YANG ELECTRONICS CO.,LTD. strives to supply high-quality high-reliability products. However, any and all semiconductor products fail with some probability. It is possible that these probabilistic failures could
give rise to accidents or events that could endanger human lives, that could give rise to smoke or fire, or that could cause damage to other property. When designing equipment, adopt safety measures so that these kinds of accidents or events cannot occur. Such measures include but are not limited to protective circuits and error prevention circuits for safe design, redundant design, and structural design.

■ In the event that any or all HUA XUAN YANG ELECTRONICS products(including technical data, services) described or contained herein are controlled under any of applicable local export control laws and regulations, such products must not be exported without obtaining the export license from the authorities concerned in accordance with the above law.

■ No part of this publication may be reproduced or transmitted in any form or by any means, electronic or mechanical, including photocopying and recording, or any information storage or retrieval system, or otherwise, without the prior written permission of HUA XUAN YANG ELECTRONICS CO.,LTD.

■ Information (including circuit diagrams and circuit parameters) herein is for example only ; it is not guaranteed for volume production. HUA XUAN YANG ELECTRONICS believes information herein is accurate and reliable, but no guarantees are made or implied regarding its use or any infringements of intellectual property rights or other rights of third parties.

■ Any and all information described or contained herein are subject to change without notice due to product/technology improvement, etc. When designing equipment, refer to the "Delivery Specification" for the HUA XUAN YANG ELECTRONICS product that you intend to use.