HONORCAP 荣誉

东莞市荣誉电子有限公司

DONGGUAN HONOR ELECTRONICS CO.，LTD

ADD：东莞市虎门镇捷南路 729 号 1 栋

TEL：0769-85359259　　FAX：0769-85359269

客户Customer:

日期Date:

承　认　书

SPECIFICATION

种　　类：固态高分子铝电解电容器

Description：　Solid　Polymer Aluminum Electrolytic Capacitors

料号　P/N：HV1C227M0605PZ

系列 SERIES：　CDHV

规格尺寸 ITEM：16V220uF　6.3*5.8

客户料号 Customer P/N:

编号 No.：RY-GT-2506019

批准　APPROVED BY

制作 PREPARED BY	审核 CHECKED BY	批准 APPROVED BY
申易勋	刘华龙	李上汕

东莞市荣誉电子有限公司 工程部

贴片式固态高分子铝电解电容器

P1 特性表格 Characteristics Table

序号 No.	料号 P/N	额定工作电压 Rated Work Voltage (V.DC)	电容量 Nominal Capacitance (120Hz,20℃) (μF)	电容量公差 Capacitance Tolerance (%)	温度 Oper Temp (ºC)	尺寸 Nominal Case Size D*L (mm)	阻抗 E.S.R (100KHz) (20ºC)(mΩ) (max)	最大漏电流 Leakage current (20℃)(μA max) 2 Minutes/W.V	损失 D.F(%) (120Hz,20℃) (max)	纹波电流 Ripple Current (100KHz,105℃) (mA.rms)	寿命 Load Life (Hours)
1	HV1C227M0605PZ	16	220	-20%～+20%	105	6.3*5.8	45.0	704	12.0	1750	2000

贴片式固态高分子铝电解电容器

1. 概述 Scope

此承认书使用于含有导电高分子电解质的 HV 系列固态贴片电解电容

These specifications specify HV series of the Aluminum Solid SMD Capacitors with Conductive Polymer Electrolyte.

2. 使用温度范围 Operating Temperature Range

使用温度范围是指电容在额定电压下可以稳定运行的环境温度范围

Operating temperature range is the range of ambient temperature at which the capacitor can be operated continuously at rated voltage. -55 ~ +105℃（ 2.5V ~ 100V ）

3. 特性 Characteristics

除非另有说明，标准的测量和测试环境条件如下：

Unless otherwise specified, the standard range of atmospheric conditions for making measurements and tests are as follows.

环境温度 Ambient temperature ： 15 to 35℃ 相对湿度 Relative humidity：45 to 85%

大气力压 Air pressure：86kpa to 106kpa

若对结果有疑问，测试则按如下标准进行

If there may be doubt on the results, measurements shall be made within the following limits.

环境温度 Ambient temperature ： 20±2℃ 相对湿度 Relative humidity：60 to 70%

大气压 Air pressure：86kpa to 106kpa

4. 额定电压、浪涌电压和额定温度 Rated voltage, Surge voltage and Rated temperature

额定电压 Rated voltage(V)	额定温度 Rated temperature(℃)	浪涌电压 Surge voltage (V)	电压种类 Category voltage(V)
2.5	105	2.9	2.5
4.0	105	4.6	4.0
6.3	105	7.2	6.3
7.5	105	8.6	7.5
10	105	11.5	10
16	105	18.4	16
25	105	28.8	25
35	105	40.3	35
50	105	57.5	50
63	105	72.5	63
80	105	92	80
100	105	115	100

5. 高低温阻抗Impedance at high and low temperature

阻抗Impedance at 100kHz at -55±3℃ or 105±2℃

阻抗比Impedance ratio	性能Performance
Z (-55℃) / Z (+20℃)	0.75 to 1.25
Z (105℃) / Z (+20℃)	0.75 to 1.25

1.物料编码 PART No. SYSTEM

HV 1C 227 M 0605 PZ

- PZ — 成型方式编码 Terminal code(1.6)
- 0605 — 尺寸编码 Size code(1.5)
- M — 电容公差 Capacitance tolerance Code (1.4)
- 227 — 电容量编码 Capacitance Code(1.3)
- 1C — 电压编码 Voltage Code(1.2)
- HV — 系列编码 Category Code(1.1)

1.1 系列编码 Series Code

编码 Code	HV
系列编码 Series Code	HV

1.2 电压编码 Voltage Code

编码 Code	0E	0G	0J	0Q	1A	1C	1E	1V	1H	1J	1K	2A
电压编码 VoltageCode(W.V)	2.5	4	6.3	7.5	10	16	25	35	50	63	80	100

1.3 电容量编码 Capacitance Code

编码 Code	476	686	227	337	477	567	687	827	108
电容量 Capacitance (uF)	47	68	220	330	470	560	680	820	1000

1.4 电容公差 Capacitance tolerance

“M” 代表-20%～+20% “ M” stands for -20%～+20%

1.5 尺寸编码 Size Code

编码 Code	0605	0607	0810	1010
直径 D (Φ)	6.3	6.3	8.0	10.0
高度 H (mm)	5.8	7.7	10.5	10.5

1.6 成型方式编码 Terminal Code

编码 Code	PC	PJ	PB	PZ
其他 Other	平豆散装 Platform rubber& In bulk	平豆剪脚 Platform rubber &Lead Cut3.5±0.3mm	平豆编带 Platform rubber& Taping Pitch=2.5mm	座板 Right lying Bending2.2±0.5mm

2. 结构Construction

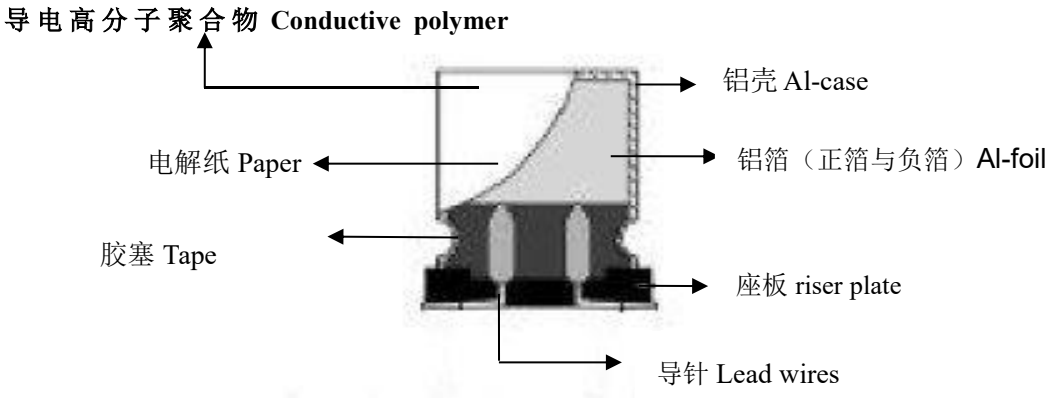

3.尺寸图 Outer dimensions (单位 Unit:mm)

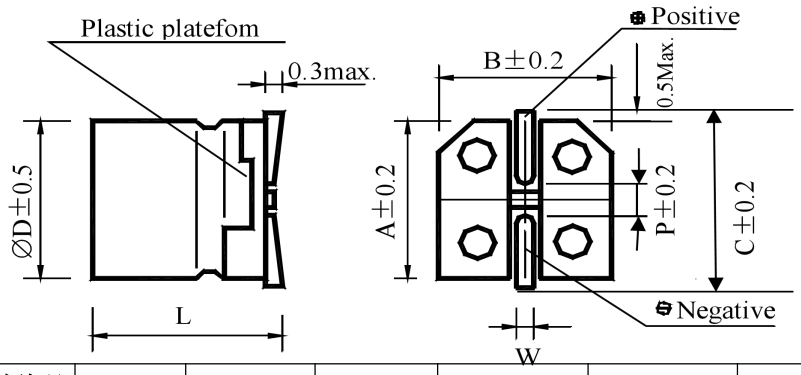

尺寸编码 Size Code	ΦD	L±0.3	P	W	A	B	C
0605	6.3	5.8	2.2	0.5~0.8	6.6	6.6	7.2

4.奈印 Marking

除非另有说明，奈印应该清晰地印在电容上

Unless otherwise specified. Capacitor shall be clearly marked on it body.

5. 回流焊 Re

无铅回流焊温度与时间曲线

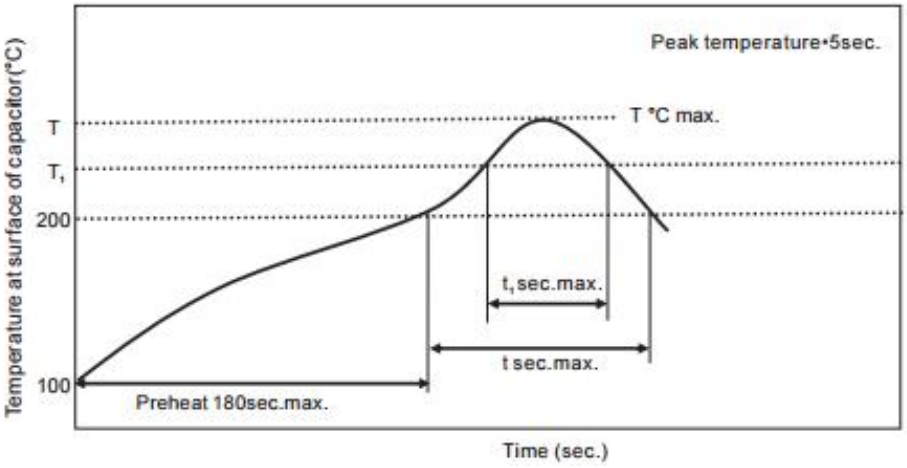

Case size (mm)	T (℃)	T¹ (℃)	t (sec.)	t' (sec.)	Refiow cycle
Φ5	250	230	90	40	1
Φ6.3	250	230	90	40	1
Φ8	240	230	90	30	1
Φ10	240	230	60	30	1

出现超过条件超过允许的情况，请联系我们；If conditions are exceeded, please contact us；

避免二次回流焊，如不可避免，请确认电容器温度已冷却至 5℃-35℃；

Avoid secondary reflow welding, if unavoidable, please confirm that the capacitor temperature has been cooled to 5℃-35℃；

6. 性能 Performance

6.1 电性能 Electrical Characteristics

序号 No.	项目 Item	测试方法 Test method	性能 Performance
6.1.1	额定工作电压 Rated voltage	DC: 2.5V ~ 100V	
6.1.2	电容量 Capacitance	测试频率 Measuring frequency : 120Hz 测试电路 Measuring circuit 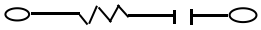 等效串联电路 Series equivalent circuit 测试电压 Measuring voltage : 0.5Vrms or less 直流偏压 DC bias voltage : +1.5~2.0VDC	参考特性表 Refer to characteristic table
6.1.3	损失角正切值 Dissipation Factor		参考特性表 Refer to characteristic table
6.1.4	阻抗 ESR	测试频率 Measuring frequency: 100kHz 测试温度 Measuring temperature: 20 ±5℃ 测量位置：不得超过导针焊点 2mm。 Measuring point : 2mm max from the surface of a sealing resin on the lead wire	参考特性表 Refer to characteristic table
6.1.5	漏电流 Leakage current	直流漏电流在 20℃，有串联 1000±100Ω 电阻的情况下以直流工作电压且充电 2min 后测试 DC leakage current shall be measured after 2 minutes application of the DC rated working voltage through the1000 Ω resistor at 20℃ 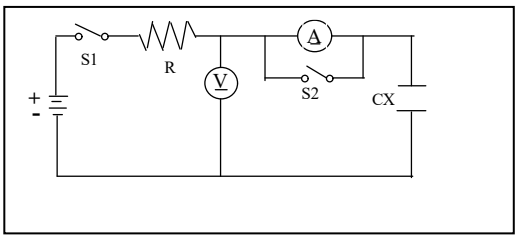 R : 1000±100Ω A :电流表 DC current meter S1 : 开关 Switch S2 : 电流表保护开关 Switch for protect of current meter V:电压表 DC voltage meter CX : 测试电容 Testing capacitor 备注:漏电流测试时，C.C 标准设定为 500mA I≤0.2CV or 500μA, whichever is greater. Where, I:Max.leakage current (μA),C:Nominal capacitance (μF),V: Rated voltage (V) (at 20°C after 2 minutes)	参考特性表 Refer to characteristic table

<table>
<tr>
<td>6.1.6</td>
<td>高温&低温特性
High & Low Temperature characteristics</td>
<td>
<table>
<tr><th>步骤
Step</th><th>温度
Temperature</th><th>存储时间
Storage Time</th></tr>
<tr><td>1</td><td>20±2℃</td><td>30minutes</td></tr>
<tr><td>2</td><td>-55^{+0}_{-3}℃</td><td>2 hours</td></tr>
<tr><td>3</td><td>(15℃ to 35℃)±2℃</td><td>15min.</td></tr>
<tr><td>4</td><td>105^{+3}_{-0}℃</td><td>2 hours</td></tr>
<tr><td>5</td><td>20±2℃</td><td>2 hours</td></tr>
</table>
步骤 1: 测试容量和阻抗
Step1： Measure the capacitance and impedance
(｜Z｜, 20℃, 120Hz±10%)
步骤 2: 冷却 2 小时后测阻抗
Step2： Measure the impedance at thermal balance after 2 hours.
(｜Z｜, -55℃ ,120Hz±10%)
步骤 3: 冷却 2 小时后测容量和漏电流
Step3： Measure the capacitance and leakage current at thermal balance after 2 hours.
步骤4: 测量电容损失
Step4： Measure the capacitance and tanδ
</td>
<td>Step 2: 阻抗比率在 0.75 至 1.25 之间
Step 4:Impedance ratio(Zr / Zr0) within 0.75 to 1.25
Step 5: 容差±5%
Capacitance change:Within ±5% of step1
损失小于或等于标准
tanδ ≤ 150% of the specified value.</td>
</tr>
<tr>
<td>6.1.7</td>
<td>耐浪涌电压
Surge voltage</td>
<td>额定浪涌电压充电 30 ± 5 秒后，在室温下放电 5 ± 0.5 分钟。这一过程要重复 1000 次，每一次循环的时间为 6 ± 0.5 分钟，测试温度为 15℃-35℃。
Rated surge voltage shall be applied (switch on) for 30 ± 5 seconds and then shall be applied (switch off) with discharge for 5±0.5 minutes at room temperature . This cycle shall be repeated for 1000 cycles. Duration of one cycle is 6 ± 0.5 minutes. Test temperature : 15℃-35℃</td>
<td>漏电流≤规格值
Leakage current≤specified value
容量改变在规格值的±20%内
损失角≤规格值的 150%
Capacitance change within±20%of the specified value
tan δ ≤150% of the specified value.
阻抗≤规格值的 150%
ESR≤150% of the specified value.</td>
</tr>
</table>

6.2 机械性能 Mechanical Performance

序号 No.	项目 Item	测试方法 Test method	性能 Performance
6.2.1	振动试验 Resistance to Vibration	依照 JIS C 5102 8.2 和 JIS C 5025 To comply with JIS C 5102 8.2 and JIS C 5025 频率：10 到 55Hz(1 分钟间隔/10→55→10 Hz) Frequency: 10 to 55Hz (1 minute interval/10→55→10Hz) 振幅：0.75mm(整体偏移 1.5mm) Amplitude : 0.75mm (Total excursion 1.5mm) 方向：X, Y, Z (3 轴) Direction : X , Y , Z (3 axes) 持续时间：2 小时/轴（共 6 小时） Duration : 2 hours / axial (Total 6 hours)	容量在 30 分钟内测量，与初始值相比不应有较大的差异，其改变在±5%以内 Capacitance value should not show drastic change compared to the initial capacitance when the value is measured within 30 minutes.Prior to the completion of exam, capacitance change should be within ±5% compared to the initial value after the exam

6.2.2	可焊性
	Solder ability
		温度：245 ± 5 °C Temperature : 245 ± 5 °C
		持续时间：2 ± 0.5 秒 Duration : 2 ± 0.5 seconds
		焊料:25wt%的松香(JIS K5902)//乙醇(JIS K 8101)
		Flux:Rosin (JIS K5902)//Ethanol(JIS K8101); About 25 wt.%
			至少 95%的浸渍表面覆盖有新的焊料
			At least 95% of surface area of the dipped portion of the terminal shall be covered with new solder.

6.3 耐受能力 Endurance Performance

序号 No.	项目 Item	测试方法 Test method	性能 Performance
6.3.1	耐焊接热 Resistance to soldering heat	焊料浴方法Solder bath method 温度Temperature : 260 ±5°C 持续时间Duration : 10±1 seconds 一直到间距为 1.0mm 的情况下 Until a distance of 1.0mm from the case. Soldering iron method : 温度 Temperature : 400 ± 10 °C 持续时间 Duration : 3+1/-0 seconds	容量变化在规格值的±5%内 Capacitance change: Within ± 5% of the specified capacitance 损失角≤规格值的 130% Tanδ≤130%of the specified value. 阻抗≤规格值的 130% ESR ≤ 130% of the specified value. 漏电流≤规格值 Leakage current ≤ specified value.
6.3.2	稳态湿热 (恒稳态) Resistance to damp heat (steady state)	温度 Temperature : 60±2℃ 相对湿度 Relative humidity : 90% ~ 95% 持续时间 Duration : 1000 (-0/+48) hrs 使用电压：无负荷 Applied voltage : without load	电容变化在规格值的±20%内 Capacitance change within ±20% of the specified value 损失角≤规格值的 150% tan δ ≤ 150% of the specified value. 阻抗≤规格值的 150% ESR ≤ 150% of the specified value. 漏电流≤规格值 Leakage current ≤ specified value.

6.3.3	快速变温 Rapid change of temperature	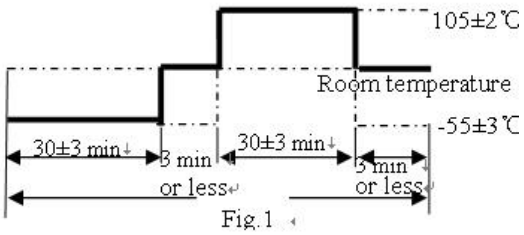 Fig.1 使用电压：无负荷 Applied voltage : without load 循环次数：5 次 Cycle number : 5 Cycles 测试图:Fig. 1Test diagram: Fig. 1	容量变化：在规格值的±10%内 Capacitance change : Within ±10% of the specified capacitance 损失角：小于或等于规格值 tanδ ≤ specified value. 漏电流：小于或等于规格值 Leakage current ≤ specified value.
6.3.4	负荷寿命试验 Load Life Test	电容在 105±2℃,加载直流电 2000 小时后，需在室温下放置 2 小时才可进行测试 After 2000 hours continuous application of DC rated working voltage at 105 ± 2℃,the measurements shall be measured after 2 hours exposed at room temperature	容量变化：在规格值的±20%内 Capacitance change within ±20% of the specified value 损失角：小于规格值的 150% tan δ ≤ 150% of the specified value. 阻抗≤规格值的 150% ESR ≤ 150% of the specified value. 漏电流≤规格值 Leakage current ≤ specified value.

7. 编带尺寸（单位：mm）Taping shapes & Dimensions

- 固态贴片铝电解电容器的编带

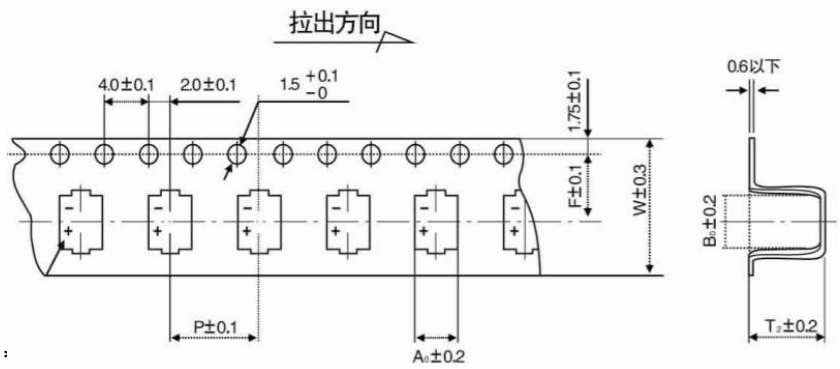

尺寸 Size	W (MM)	P (MM)	F (MM)	A0 (MM)	B0 (MM)	T2 (MM)	S	形状 Applicable
Φ6.3*5.8	16	12	7.5	7.0	7.0	5.8	--	
Φ6.3*7.7	16	12	7.5	7.0	7.0	8.3	--	
Φ8*10.5	24	16	11.5	8.7	8.7	11.0	--	
Φ10*10.5	24	16	11.5	10.7	10.7	11.0	--	

编带包装盘（mm）

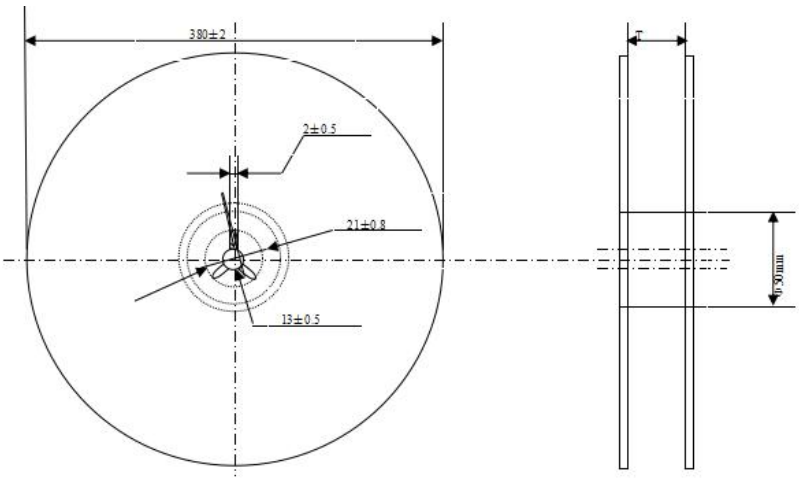

Φd	6.3	8、10
T	18	26

包装数量

ΦD	数量/每盘	数量/每箱
4	2000pcs	40Kpcs
5、6.3	1000pcs	20Kpcs（Φ5）、10Kpcs（Φ6.3）
8、10	500pcs	5Kpcs

8. 纹波电流频率系数 Frequency coefficient for ripple current

频率 Frequency	120Hz ≦ f ＜1 kHz	1 KHz ≦ f ＜10 kHz	10 KHz≦ f ＜100 kHz	100 KHz ≦ f ＜300 kHz
系数 Coefficient	0.05	0.3	0.7	1.00

备注 REMARKS

如果有任何疑问，在电压处理后测量漏电流。

电压：直流额定电压适用于电容器在 105℃下 120 分钟。

需在室温下放置 2 小时才可进行测试

If any doubt arises, measure the leakage current after following voltage treatment.

Voltage treatment : DC rated voltage are applied to the capacitors for 120 minutes at 105℃.

The measurements should be measured after 2 hours exposed at room temperature

9. 操作注意事项Operating Precautions

9.1 极性Polarity

CAP是具有正负极的固态铝电解电容，使用中不可反接，若接反，则电容会因为漏电流不断增大或短路而造成寿命缩短。

CAP is a solid aluminum electrolytic capacitor with positive and negative electrodes. Do not reverse the polarity when using.If it is used with the polarities reversed, its life may shorten because of increasing leakage current or short circuit.

9.2禁止电路 Prohibited circuits

因为焊接及其它动作可造成电容的漏电流增加，CAP不可使用在下列电路中：

Since problems can be expected due to leakage current increasing during soldering and other processes, CAP cannot be used in the following circuits

1)高阻抗电路1) High impedance circuits；

2)耦合电路2) Coupling circuits；

3)时限恒量电路3) Time constant circuits；

4)为提高耐电压而串联两个或多个电容于电路中

4) Connection of two or more capacitors in series for higher withstand voltage；

5)电路因漏电流过大而有坏的影响5)Circuits to get bad influence by big leakage current

* 除漏电流的波动上升外，电容的使用条件如在承认书中规定的高温和低温，温热和耐受性条件都会影响电容量。若电容作为时限恒量电容使用，因其对电容量的变动的敏感性，电容量的改变会造成影响。不要将其作为时限恒量电容使用，同时若因电压原因要串联多个CAP电容，请联系东莞市荣誉电子有限公司。

* In addition to the leakage current fluctuation above, the operational conditions such as characteristics at high and low temperature, damp heat and endurance stipulated in the specifications will affect the capacitance.The fluctuation of the capacitance may cause problem if it is used as a time constant capacitor, which is extremely sensitive to the fluctuation of the capacitance.Do not use it as a time constant capacitor.Additionally, please contact Dongguan Honor Electronics Co., Ltd. for usage of two or more CAP in series for voltage proof.

9.3 电压Over voltage

电压若超过额定电压，即便只是一瞬间也可能造成短路

Over voltage exceeding the rated voltage may not be applied even for an instant as if may cause a short circuit.

9.4突然充放电Sudden charge and discharge

突然的充放电是不可取的（为了维持高的可靠性）。为防止突然的充放电造成电容短路或漏电过增大，电路中应加上一个保护电路用以分流过大的电流。若瞬间电流超过10A或超过10倍允许纹波电流，要使用保护电路。在测试漏电流时请加上一个1kΩ的电阻用以充放电。

Sudden charge and discharge restricted(for maintenance of high-proof reliability). A protection circuit is recommended for when a sudden charge or discharge causes excessive rush current because this is a main cause of short circuits and large leakage current.Use protection circuits if the rush current exceeds 10A. The rush current exceeds 10×the maximum allowable ripple current of CAP.Be sure to insert a protection resistor of about 1kΩ for charge and discharge when measuring the leakage current.

9.5焊接注意事项Considerations when soldering

焊接条件要在承认书的规定范围内。若没有遵守承认书的条件，则电容漏电流可能急剧增加，容量

衰减。

The soldering conditions are to be within the range prescribed in specifications. If the specifications are not followed,there is a possibility of the cosmetic defection, the intensive increase of leakage current, and the capacitance reduction.

使用需知Things to be noted before mounting

(a) 已安装过的或加过电压的CAP请勿再使用。经历了周期性电性能测试的CAP不可再用。

(a) Do not reuse CAP that have been assembled in a set and energized. Excluding CAP that have been removed for measuring electrical characteristics during a periodic inspection, CAP cannot be reused.

(b) CAP贮藏一年时间后，漏电流可能会增大，使用前，请在105℃ ，额定电压及接有1 kΩ电阻的条件下充电2小时。

(b)Leakage current may increase when CAP are stored for one year. In this case, apply rated voltagefor 2 hour at 105 ℃ with load of 1 kΩ resistor.

(c)Reflow soldering流体焊接

Do not apply radial lead type capacitors to reflow soldering. 不可用于SMD系列

(d)Handling after soldering焊接后处理

在这之后，不要倾斜，弯曲或扭曲CAP Do not tilt, bend or twist theCAP after it

不可通过抓捏CAP来移动印刷电路板Do not move the PCB with catching CAP itself.

堆叠印刷电路板时确保CAP没有碰触到其它电路板或部件

When stacking PCB make sure that the CAP does not touch other PCB or components.

不可将CAP与其它物品堆放Do not dump the CAP with objects.

9.6使用CAP于工业设备Use of CAP for industrial equipments

为确保CAP在工业设备上的可靠性，设计必须与之相符。

To ensure reliability when the CAP is used in industrial equipments, design must allow for its

9.7使用CAP于生命保障系统Use of CAP for human life equipments

若使用于与人类生命有关的设备上（如空间设备、航空设备、原子设备等），请与东莞市荣誉电子有限公司详细咨询，不要使用没有东莞市荣誉电子有限公司承认文件的CAP。

In case of using in equipments regarding human life(e.g. Space equipment, aeronautic equipment and atomic equipment etc.) , be sure to talk over the matter with Dongguan Honor Electronics Co., Ltd.

Don’t use without recognition document of Dongguan Honor Electronics Co., Ltd.

8.8贮存Storage

1)请将CAP贮存于温度在-40 to 85℃之间，相对湿度在75%以下的没有阳光直射的环境中，如果可能可贮存于包裹中。(如果在35到85℃，他应该少于三个月)

Store CAP with the temperature range between -40 to 85℃（If between 35 to 85℃, it should be less than three months），and the relative humidity of 75% without direct sunshine and store CAP in the package states if possible.

2)CAP请在使用前再打开包装袋并且快速用完。

CAP are recommended that you shall open the bag just before use and CAP shall be used up.

3)不要在有水、盐水、油及凝结状况的地方贮存CAP

Never store CAP in which it is directly exposed to water, brine, oil or in condensation status.

4)禁止在含有毒气体的区域放置CAP（如：硫化氢、亚硫酸、亚硝酸、氯气、氨水等）

Never store CAP in any area filled with poisonous gases(including hydrogen sulfide, sulfurous acid, nitrous acid, chlorine and ammonia).

5)禁止在有紫外线或放射性辐射的区域放置CAP。
Never store CAP in any area to which ultraviolet and/or radial rays are radiated.

※ (导针式Radial lead type)

开启前：出货后一年内Before unseal : within 1 year after delivery

封口后：打开后7天内After seal : within 7 days from opening

9.9 清洗Cleaning

关于HCFC，可用高浓酒精，石油，匝烯，水和表面活性剂以及别的溶剂（单独或混合使用）浸泡，用超声波，煮沸，蒸发等方法按制作者的建议清洗。更多详情请联系。

Concerning about HCFC, higher alcohol system, petroleum system, terpene system, water system with surface active agent and other solvents the washing way (separateness or combinations) by soak, ultrasonic wave, boil, vapor etc. is confirmed under the maker's recommendation. Please contact us if you require further details.

9.10为CAP设计电路的说明Notes on circuit designs for CAP

9.10.1 执行Performance

在承认书中指定的额定性能范围内使用CAP。

Use CAP within the rating and performance ranges defined in this specifications.

9.10.2使用温度和纹波电流Operating temperature and ripple current

如果CAP的使用温度超过了上限温度（105℃）或是有过载纹波电流通过，则有较大可能使寿命缩短，或漏电流增大，造成CAP失效。

If CAP is used at a temperature higher than the upper category temperature(105℃), or excess ripple current flows through CAP, there are high possibilities of life cycle reduction or leakage current increasing to cause CAP defective.

9.10.3漏电流Leakage current

漏电流会因焊接条件而有些微的上升，加载直流电压可使电容自我修复，漏电流逐渐减小。

The leakage current of CAP may increase slightly by soldering conditions. The application of DC voltage enables the capacitors to be repaired by itself and this leads the leakage current to be smaller gradually.

9.10.4使用电压Applied voltage

为了保证CAP的可靠性，加载到CAP上的电压最好小于其额定电压的80%。直流加交流电压的峰值应小于额定电压。

For the reliability of CAP, it is recommended that the voltage applied to CAP should beless than 80% of the rated voltage.Peak value of the the dc and ac voltage should not exceed its rated voltage.

8.10.5失效模式Failure mode

CAP含有导电聚合物，其寿命的终止大部分是由于偶然失效模式，主要是短路。如果短路，CAP将会因持续电流流过而过热，然后铝壳会因内部压力的增加而脱离电容。

CAP contains a conductive polymer. The life ends mostly due to random failure mode, mainly short circuit.In case of short circuit, CAP can be overheated by continuous current flow, then case of CAP would be removed by internal pressure increasing.