客户名称：

Customer name:

发行日期： 2026-09-05

ISSUE DATE: 2026.09.05

基板自立型铝电解电容器

Snap-in AL-Electrolytic Capacitors

产品规格书

Product Specification

目 录 系 列 Catalog Series	**SW3**
规 格 Catalog item	1000μF /200V 25Ø×45L
客 户 料 号 User parts No.	20260905

USER APPROVAL

BUYER'S STAMP	供应商 Supplier		
	批准 Approved by	审核 Checked by	拟制 Prepared by
	孙康东	邹小丽	刘则曼

上海永铭电子股份有限公司

ShangHai Yongming Electronic Co., Ltd.

Shanghai Yongming Electronic Co.,Ltd.

Address: No.258,Guangcun Road , Yangwang Industrial Park,Fengxian District,Shanghai ,China

Code: 201406

Tel: 021- 33617848 **Fax:** 021-33617128 Http://www.ymin.com

1. 更 改 记 录 Record any changes

版 本 (version)	更改日期 (Change the date)	更改内容(Change the content)	更改页面 (Change the page)	更改者 (Those changes)
1.0				

2.编码方法 Encoding method

系列 Series	额定电压 Rated V		额定容量 Rated Cap		容量公差 Cap Tolerance		编带 Binder		尾柱 End-pin		外径 Diameter		长度 Length		螺栓种类 Bolt Type
系列	代码	电压	代码	容量	代码	公差	代码	类型	代码	尾柱	代码	外径	代码	长度	代码
SN3 SN3M SN6 SN6N SW3 SW3M SW6 SW12 SH3 SHN3 SN3A SRW3 CN3 CN6 CW3 CW6 CW3S SH15	2F 2N 2O 2P 2Q 2B 2R 2S 2T 2C 2D 2E 2K 2V 2G 2A 2W 2H 2L 2M 2J	16V 25V 35V 50V 63V 80V 100V 110V 125V 160V 200V 250V 300V 350V 400V 420V 450V 500V 550V 600V 630V	0R1 1R0 100 101 102 103 222 332 472	0.1μF 1.0μF 10μF 100μF 1000μF 10000μF 2200μF 3300μF 4700μF 代码规则：前两位数加上后面零的个数	K M Q T L	±10% ±20% -10% +30% -10% +50% 0% +20%	Y I N	三角编带 两脚编带 无编带	M N	有尾柱 无尾柱	Z Y X A B H W C	22Φ 25Φ 30Φ 35Φ 40Φ 42Φ 45Φ 51Φ	S01 S02 S03 S04 S05 S06 S07 S08 S09 S10 G01 G02 G03 G04 G05 G06 G07 G08	20 25 30 35 40 45 50 55 60 65 70 75 80 85 88 90 96 100	S2 S4

3. 规格承认 Specifications

NO.	客户料号 Customer part number	规格 Specifications	YMIN 料号 YMIN part number
1	20260905	1000μF / 200 V 25*45	SW32D102MNNYS06S2
2			
3			
4			
5			
6			
7			
8			
9			
10			
11			
12			
13			
14			
15			
16			
17			
18			
19			
20			
21			
22			
23			
24			
25			
26			
27			
28			

4. 产品外观尺寸及特性 Casing size and Electrical characteristics

4.1 外形尺寸 Casing size

端子代码(Terminal code) S2 (Φ22~Φ51):标准品(standard):

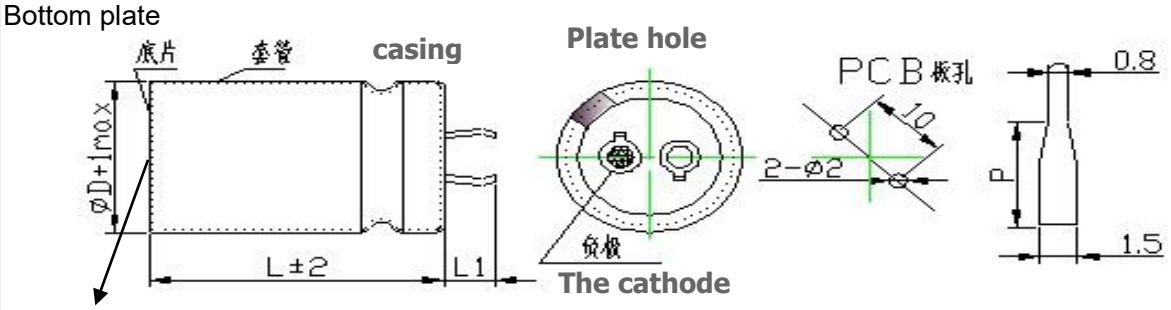

防爆筋(Explosion-proof reinforcement)

端子代码 (Terminal code)S4 (Φ22~Φ51):

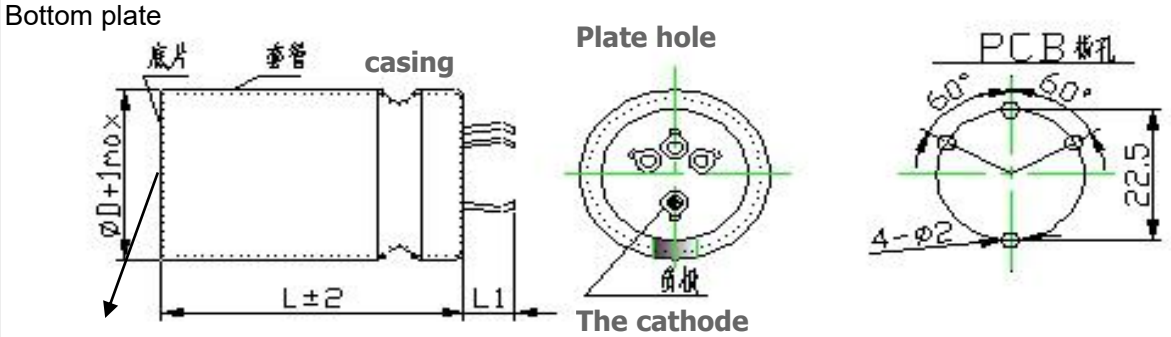

防爆筋(Explosion-proof reinforcement)

ΦD (mm)	L1(mm)±0.5	C(mm)±0.1	ΦD (mm)	L1(mm)±0.5	C(mm)±0.1
22	6.5	8.0	35	6.5	10.0
25	6.5	10.0	40	6.5	10.0
30	6.5	10.0	42	6.5	10.0

4.2 电气特性 Electrical characteristics

气候类别 Environmental Category: -25℃/+105℃									
		at 120Hz 25℃				25℃, after 5min	25℃ 120Hz	105℃ 120Hz	
额定电压 Rated Voltage (V.D.C)	浪涌电压 Surge Voltage (V.D.C)	额定容量 Rated Capacitance (uF)	尺寸 Size (Φ×L)	容量偏差 Capacitance Tolerance (%)	损耗角正切 Dissipation (MAX)	漏电流 Leakage Current (mA , MAX)	ESR 最大值 ESR Maximum (mΩ)	最大纹波电流 A Ripple current permissible Maximum	寿命 Life At 105℃ (Hours)
200	250	1000	25*45	±20	0.15	1.5	215.00	1.98	3000

5. 套管标识 appearance of the product identification

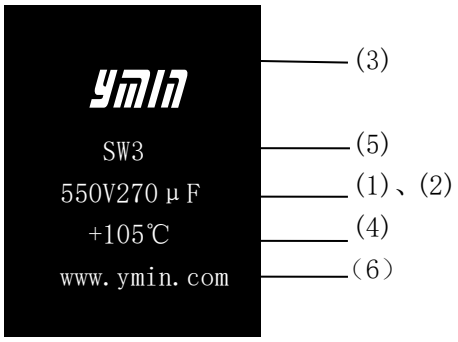

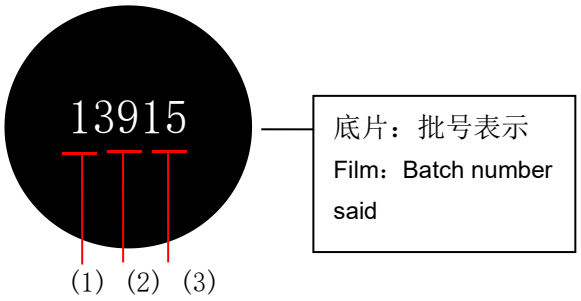

NO.	项目 Item
1	额定电压 Rated voltage
2	静电容量 Capacitance
3	商标 Brand
4	最高使用温度 Max Temperature
5	产品系列 Products series
6	正极+POSITIVE

NO.	说明 Explain
1	表示年份 / YEAR
2	“1-9”代表“1-9月” “O、N、D”代表“10、11、12月” 1-9：Jan.-Nov.; O-Oct., N-Nov. D-Dec.
3	“01-99”表示“01-99批” “01-99”--Batch “01-99”

6. 性能特性 Performance characteristics

NO.	项目Item	特性 Characteristics	规格Specification
6.1	静电容量 Capacitance 损耗角 Dissipation factor	1.测定频率：120±12Hz Measuring frequency 2.测定电压：≤0.5Vrms+0.5~2.0VDC Measuring voltage 3.测定电路： Measurement circuit	电压、容量范围、损耗角正切值请看该系列之规格说明。 Voltage range、capacitance range, dissipation factor see specification of this series.
6.2	漏电流 Leakage current	在25℃通过1000Ω的电阻施加直流工作电压5分钟后测定直流漏电流。 DC leakage current shall be measured after5minutes application of the DC rated working voltage through the 1000 Ω resistor at 25℃ . S1 R A V S2 CX R:1000±100Ω S1:开关 Switch A:直流电流计 S2:直流电流计的保护开关 DC current meter Switch for protect of current meter V:直流电压计 CX:测试电压 DC voltage meter Testing capacitor	I≤0.01CV（C：标称容量，V：额定电压） 或者1.5mA取小者，5分钟测试@20℃。 After 5 minutes at 25℃ application of rated voltage,leakage current is not more than 0.01CV or 1.5mA,whichever is smaller. C:Nominal Capacitance V:Rated Voltage.

<table>
<tr>
<td>6.3</td>
<td>浪涌试验
Surge test</td>
<td>在常温下施加额定浪涌30±5秒，然后停止施加浪涌电压并且放电5±0.5分钟，这个循环要重复1000次。以6±0.5分钟为一个循环周期。
Rated surge voltage shall be applied for 30±5 seconds and then shall be applied with discharge for 5±0.5 min at room temperature.this cycle shall be repeated for 1000 cycles.duration of one cycle is 6±0.5 minutes.</td>
<td>静电容量变化：最初规定值的15%以内
Capacitance change:within ±15% of the initial specified value.

损耗角：低于最初规定值的100%
Dissipation factor: less than 100% of the initial specified value.

漏电流：在最初规定值以内
Leakage current: within initial specified value.</td>
</tr>
<tr>
<td>6.4</td>
<td>耐振性
Vibration resistance</td>
<td>振动频率要均匀，范围为10Hz，到55Hz，振动为1.5mm，在X、Y、Z三个方向每个方向振动2小时。
The frequency of the vibration shall vary uniformly within the range 10 to 55 Hz with the amplitude of 1.5mm,
The capacitor shall be vibrated in three mutually perpendicular directions for a period of 2 hours in each direction.</td>
<td>静电容量：稳定
Capacitance : no unsteady

外观：无异常
Appearance : no abnormal

容量变化：最初测得值的±5%之内
Capacitance change : within ±5% of initial measured value.</td>
</tr>
<tr>
<td>6.5</td>
<td>稳定状态
Steady state</td>
<td>电容器在40±2℃及相对湿度90%到95%的条件下经历240±8小时。
Subject the capacitors to 40±2℃ and 90% to 95% relative humidity for 240±8 hours.</td>
<td>容量变化：最初测定值的±10%之内
Capacitance change : within ±10% of the initial measured value.

损耗角：低于规定值
Tgδ : less than specified value.

漏电流：低于规定值
Leakage current: less than specified value.</td>
</tr>
<tr>
<td>6.6</td>
<td>高温负荷
Load life</td>
<td>在105℃±2℃环境中，并在频率120Hz下连续施加直流额定工作电压及最大纹波电流，经3000小时后，按以下条件测试。在室温下放置12小时后进行测试。
After3000 hours continuous application of Rated DC working voltage with max.ripple current having frequency of 120Hz. At105℃±2℃,the measurements shall meet the following limits.Measurements shall be performed after1 2 hours exposed at room temperature.</td>
<td>容量变化：最初测定值的±20%之内
Capacitance change : within ±20% of the initial measured value.

损耗角：低于规定值200%
Tgδ : less than specified value200%.

漏电流：低于规定值
Leakage current: less than specified value.</td>
</tr>
<tr>
<td>6.7</td>
<td>温度特性
Temperature characteristics</td>
<td>
<table>
<tr><th>步骤
STEP</th><th>温度
TEMPERATURE</th><th>放置时间
STORAGE TIME</th></tr>
<tr><td>1</td><td>20℃±2℃</td><td>2 hours</td></tr>
<tr><td>2</td><td>-25℃±3℃</td><td>2 hours</td></tr>
<tr><td>3</td><td>20℃±2℃</td><td>15 minutes</td></tr>
<tr><td>4</td><td>105℃±2℃</td><td>2 hours</td></tr>
</table>
Step 1.测定静电容量及阻抗(Zr)
(|Z|,20℃,120Hz±10%)
Measure the capacitance and impedance.
Step 2.达到热平衡2小时后测定阻抗(Zr).
(|Z|, -25℃,120Hz±10%)
Measure the impedance at thermal balance after 2 hours.
Step 4.达到热平衡2小时后测定静电容量及漏电流。
Measure the capacitance and leakage current at thermal balance after 2 hours.
</td>
<td>Step 2.
阻抗比：Z（-25℃）/Z（20℃）≤8
Impedance ratio (Zr/Zro): Z（-25℃）/Z（20℃）≤8
静电容量变化：最初测定值的±15%以内
Capacitance change:within ±15% of the initial measured value.
Step 4.
静电容量变化：最初测定值的±15%以内
Capacitance change:within ±15% of the initial measured value.

漏电流：初期规格值的5倍以下。
Leakage current: less than 5 times of initial specified value.</td>
</tr>
</table>

6.8	高温无负荷 Shelf life	在105℃±2℃环境中不施加直流定格电压，放置1000小时后，按以下条件测试。测试在室温露置12小时，施加直流定格电压Z分钟后进行。 After storage for 1000 hours at 105℃±2℃ without voltage application,the measurements limits. Measurements shall be performed after exposed for 1 2 hours at room temperature after application of DC rated voltage to the capacitor for Z minutes. (Z::see specification of this series.见该系列规格说明。)	容量变化：最初测定值的±15%之内 Capacitance change : within ±15% of the initial measured value. 损耗角：低于规定值200% Tgδ : less than specified value200%. 漏电流：低于规定值 Leakage current: less than specified value.
6.9	低温贮存 Storage at low temperature	电容器在-40℃±3℃环境中贮存240±8小时，其间不施加电压。之后，在标准大气压中露置16小时以上，然后进行测试。 The capacitor shall be stored at temperature of -40℃±3℃ for 240±8 hours,during which time no voltage shall be applied.And then the capacitor shall be subjected to standard atmospheric conditions for 16 hours or more,after which measurements shall be made.	容量变化：最初值的±10%之内 Capacitance change : within ±10% of the initial value. 损耗角：低于规定值 Tgδ : less than specified value. 漏电流：低于规定值 Leakage current: less than specified value. 外观：无异常 Appearance : no abnormal
6.10	绝缘耐压 Insulation Voltage	全部端子和容器套上的绝缘套且安装的固定带之间施加AC2,000V的电压1分钟未出现异常。 When AC 2000V is put on between the two terminals and the clips which is installed on the insulating sleeve for 1 minute, nothings abnormal happens.	无异常 As usual
6.11	绝缘阻抗 Insulation Impedance	全部端子和容器套上的绝缘套且安装的固定带之间用DC500V的绝缘电阻测定仪测出的值大于等于100MΩ。 The resistance tested by DC500V insulation resistance tester between both terminals and the clip which installed on the insulating sleeve is above 100MΩ.	测试值在100MΩ以上 Above 100MΩ

7. 纹波电流系数 Multiplier for ripple current

7.1 温度系数 Temperature Coefficient

温度(℃)	40	60	85	105
系数	2.7	2.2	1.7	1.0

7.2 频率系数 Frequency coefficient

频率（Hz)Frequency	50/60	120	500	1K	10K 以上
系数 Coefficient	0.8	1.0	1.2	1.25	1.4

8. 产品结构 Structure of The Product

构成部件 Parts	材质 Material	供应商 Vendor
铝壳 AL Case	铝 Aluminum 99.5%	临安奥星 Aoxing Lin'an
套管 Sleeve	聚氯乙烯 Polyvinyl Chloride	日本郡是 Junshi Japan
盖板 End seal board	环氧树脂 Ethoxyline resin	南通嘉能电子 Jianeng e. Nantong
	铝 Aluminum (端子 Terminal)	
垫片 Bottom plate	聚氯乙烯 Polyvinyl Chloride	南通汇隆电子 Huilong e. Nantong
电解纸 Separator	电解电容器纸 Electrolytic Capacitors Paper	凯恩 Kaien
导箔条 Lead Tab	铝 Aluminum 99.99%，630vf	吴江飞乐 Feile Wujiang
负极箔 Cathode Foil	铝 Aluminum 99.7%	
正极箔 Anode Foil	铝 Aluminum 99.99%	海星 Haixing e.
		南辉 Nanhui e.
电解液 Electrolyte	有机溶剂 Organic Solvent	深圳新宙邦 Xinzhoubang Shenzhen

9. 铝电解电容器存放环境与控制

Storage Conditions and Control for Aluminum Electrolytic Capacitor

1. 环境温度：5℃～35℃，湿度：75%以下。

   Store the capacitor at a temperature of 5℃ to 35℃ and at a relative humidity of less than 75%.

2. 存放环境不应有阳光直射，不宜高温。

   Store the capacitor in low temperature places free from direct sun shine.

3. 存放环境不能有盐份、油含量高的雾气。

   Store the capacitor in places free from oil vapor,salt water vapor.

4. 存放在远离氯气、氨气、硫化氢、亚流酸、硝酸等有害气体含量高的地方。

   Store the capacitor in places far from toxic gases (chlorine,ammonium,hydrogen sulfide,sulfurous acid,nitric acid,etc)

5. 储存环境不能有臭氧、紫外线或辐射。

   Store the capacitor in place free from Ozone、ultraviolet ray or radiation.

10. 使用清洁剂之注意事项 Detergent needing attention

铝电解电容器易受含有碳化氢卤素容剂的侵蚀，下列为各种安全与不安全的清洁剂，为避免不必要的损失，您所使用有关印刷基板之清洁剂名请事先告知本公司。

Hydrogen carbide liquid and halogen liquid can cause Aluminum Electrolytic Capacitor to corrode . Some of Safe and Unsafe detergent are as follows.

安全 Safe	不安全 Unsafe
甲醇 Methanol 乙醇 Ethanol 丙醇 Propanol 丁醇 Butanol 去垢剂 Detergent	三氯乙烷 Trichloroethane 四氯化碳 Carbon tetrachloride 哥罗仿（无色挥发性液体） Chloroform (colorless volatilizable liquid) 二氯甲烷 Methylene chloride 三氯甲烯 Cross-linked with methylene 二甲苯 Xylene

11. 包装说明 Packing instruction

直径 diameter	包装数量 Number of packages
22Ø	250PCS/盒 box
25Ø	180PCS/盒 box
30Ø	125PCS/盒 box
35Ø	100PCS/盒 box
42Ø	75PCS/盒 box
45Ø	50PCS/盒 box

注：出口包装方式同内销。Note: export packing way with domestic sales

12. 有害物质含量声明 Harmful substance content statement

有毒有害物质或元素的名称及含量表

Poisonous and harmful substances or elements of the name and watch content

材料名称 Material name	有毒有害物质或元素 Poisonous and harmful substances or elements						备 注 note
	铅（Pb）	汞（Hg）	镉（Cd）	六价铬（Cr(VI)）	多溴联苯（PBB）	多溴二苯醚（PBDE）	
铝壳 AL Case	N.D.	N.D.	N.D.	N.D.	N.D.	N.D.	
套管 Sleeve	N.D.	N.D.	N.D.	N.D.	N.D.	N.D.	
盖板 End seal board	N.D.	N.D.	N.D.	N.D.	N.D.	N.D.	
垫片 Bottom plate	N.D.	N.D.	N.D.	N.D.	N.D.	N.D.	
电解纸 Separator	N.D.	N.D.	N.D.	N.D.	N.D.	N.D.	
导箔条 Lead Tab	N.D.	N.D.	N.D.	N.D.	N.D.	N.D.	
负极箔 Cathode Foil	14	N.D.	N.D.	N.D.	N.D.	N.D.	
正极箔 Anode Foil	N.D.	N.D.	N.D.	N.D.	N.D.	N.D.	
端子 Terminal	N.D.	N.D.	N.D.	N.D.	N.D.	N.D.	
电解液 Electrolyte	N.D.	N.D.	N.D.	N.D.	N.D.	N.D.	

ND：表示该有毒有害物质在该部件所有均质材料中的含量均在 2002/95/EC ROHS 规定的限量要求以下。

ND:Said the poisonous and harmful material in the part of all homogeneous material content are in 2002/95 / EC ROHS requirements prescribed limits the following.

×：表示该有毒有害物质至少在该部件的某一均质材料中的含量超出 2002/95/EC ROHS 规定的限量要求。

×：Said the poisonous and harmful material in the parts of at least a homogeneous materials beyond the amount of 2002/95 / EC ROHS requirements prescribed limits.