DUAL OPERATIONAL AMPLIFIER

DESCRIPTION

HG4558 is the dual operational amplifier, specially designed for improving the tone control, which is most suitable for the audio application. Featuring noiseless, higher gain bandwidth, high output current and low distortion ratio, and it is most suitable not only for acoustic electronic part of audio pre-amp and active filter, but also for the industrial measurement tools. It is also suitable for the head phone amp at higher output current. And further more, it can be applied for the handy type set operational amplifier of general purpose in application of low voltage single supply type which is properly biased of the input low voltage source.

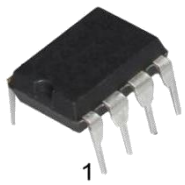

DIP-8

SOP-8

MSOP-8

DFN-8 3*3

FEATURE

- Operating Voltage：±2.25V~±16V.
- Low Input Noise Voltage：0.8μVrms Typ.
- Wide Gain Bandwidth Product : 15mhz Typ.
- Low Distortion :0.0005% Typ.
- Slew Rate:5V/μA Typ.
- Package Outline DIP-8、SOP-8、DFN-8 and MSOP-8 .
- Bipolar Technology.

Ordering Information

DEVICE	Package Type	MARKING	Packing	Packing Qty
HG4558N	DIP-8	HG4558,4558	TUBE	2000pcs/box
HG4558M/TR	SOP-8	HG4558,4558	REEL	2500pcs/reel
HG4558MM/TR	MSOP-8	4558	REEL	3000pcs/reel
HG4558DQ3/TR	DFN-8 3*3	4558	REEL	5000pcs/reel

PIN CONFIGURATION

DIP-8/SOP-8/MSOP-8

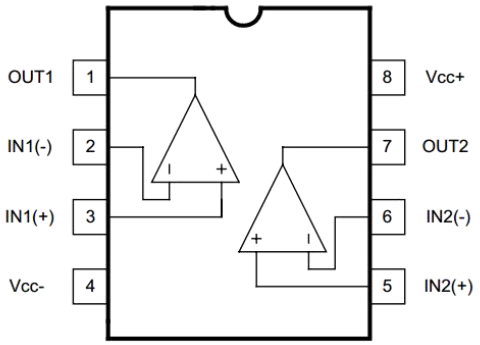

DFN-8 3*3

(Top View)

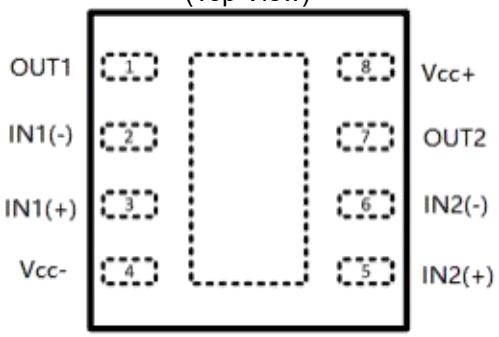

EQUIVALENT CIRCUIT

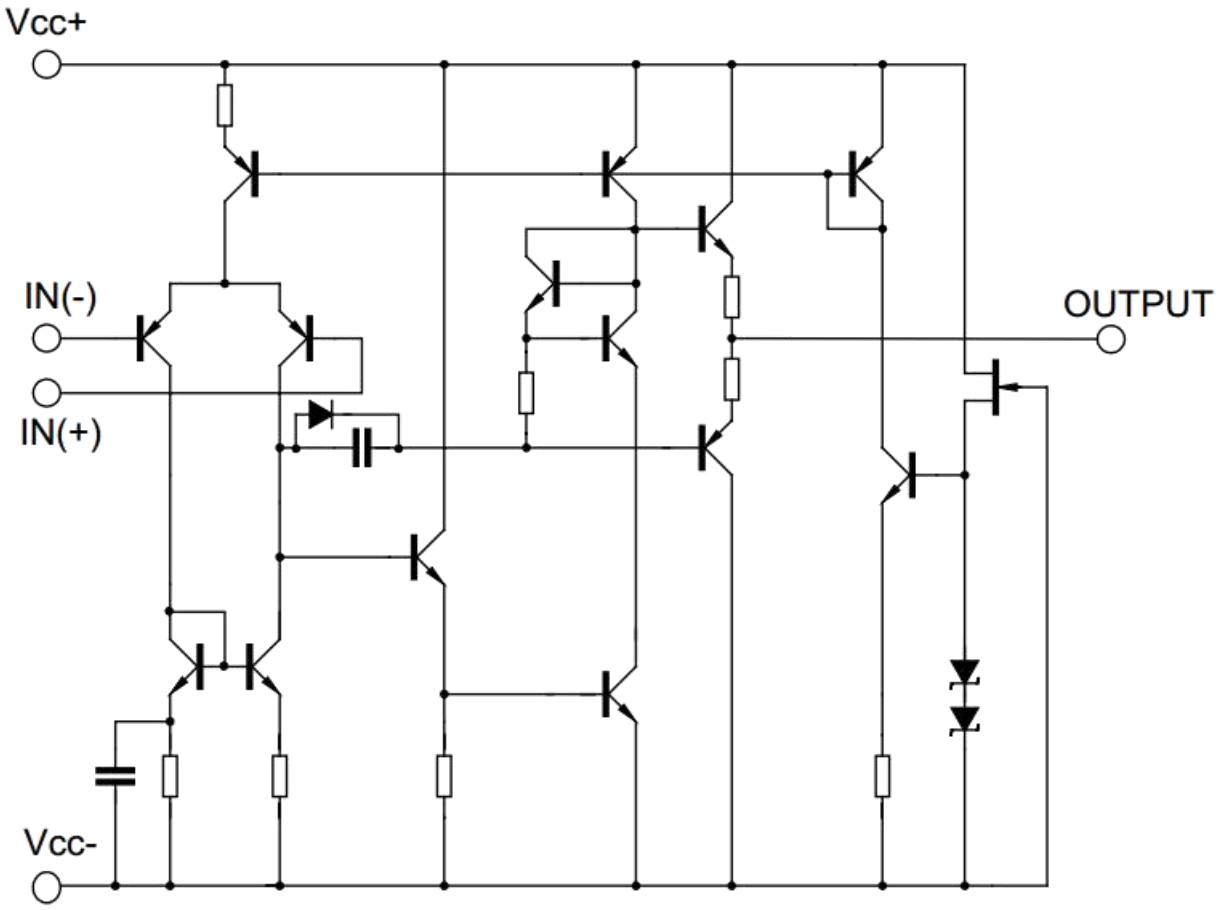

ABSOLUTE MAXIMUM RATINGS (Ta=25°C)

Characteristic		Symbol	Value	Unit
Supply Voltage		V+/V-	±16	V
Input Voltage		V_{IC}	±15	V
Differential Input Voltage		V_{ID}	±30	V
Output Current		I_O	±50	mA
Power Dissipation	DIP-8	P_D	800	mW
	SOP-8		300	
	MSOP-8		250	
Operating Temperature Range		T_{OPR}	-40~85	°C
Storage Temperature Range		Tstg	-40~125	°C
Lead Temperature (Soldering, 10 seconds)		T_L	260	°C

Note:Absolute Maximum Ratings indicate limits beyond which damage to the device may occur. Operating Ratings indicate conditions for which the device is intended to be functional, but specific performance is not ensured.

Operating temperature range: -40°C to +125°C. This product is designed for industrial grade applications. For automotive grade versions compliant with AEC-Q100, please conduct internal screening per the standard or contact our sales team for availability.

ELECTRICAL CHARACTERISTICS

(Unless otherwise specified: Ta= 25°C, V+/V- =±15V)

Parameter	Symbol	Test condition	Min	Typ	Max	Unit
Input Offset Voltage	V_{IO}	Rs ≤ 10 kΩ		0.5	3	m V
Input Offset Current	I_{IO}			5	200	nA
Input Bias Current	I_B			100	500	nA
Large Signal Voltage Gain	Av	RL ≥ 2kΩ，Vo =±10V	90	110		dB
Output Voltage Swing	V_{OM}	RL ≥ 2kΩ	±12	±13.5		V
Input Common Mode Voltage Range	V_{ICM}		±12	±13.5		V
Common Mode Rejection Ratio	CMR	Rs ≤ 10 kΩ	80	110		dB
Supply Voltage Rejection Ratio	SVR	Rs ≤ 10 kΩ	80	110		dB
Operating Current	Icc			6	9	m A
Slew Rate	SR	R_L ≥ 2kΩ		5		V/ μs
Gain Bandwidth Product	GB	f=10kHz		15		MHz
Total Harmonic Distortion	THD	Av=20dB，Vo = 5 V，f=1kHz，RL =2kΩ		0.0005		%
Input Noise Voltage	V_{NI}	RIAA Rs=2.2kΩ，30kHz LPF		0.8		μVrms

CHARACTERISTICS CURVES

Maximum Output Voltage Swing vs.Load Resistance

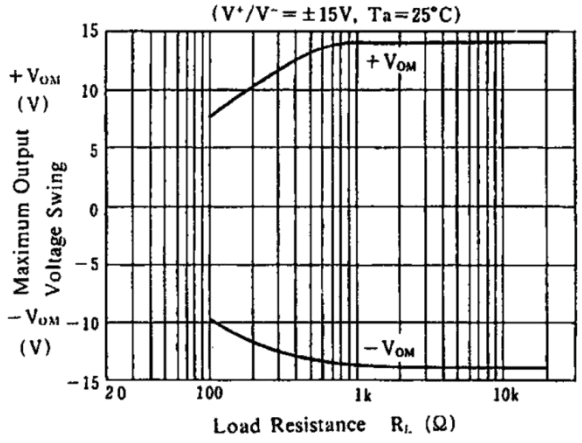

Maximum Output Voltage Swing vs.Frquency

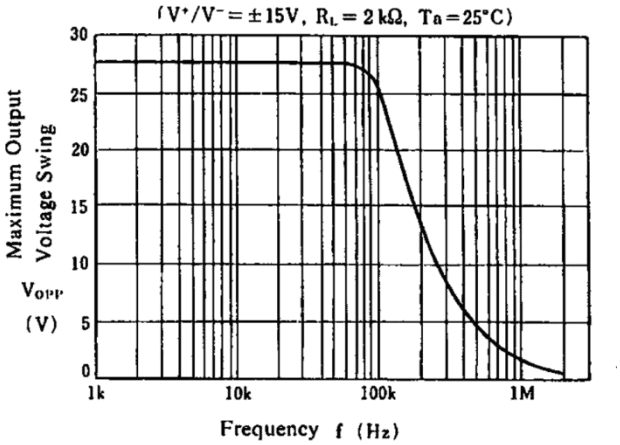

Output Voltage Swing vs.Output Current

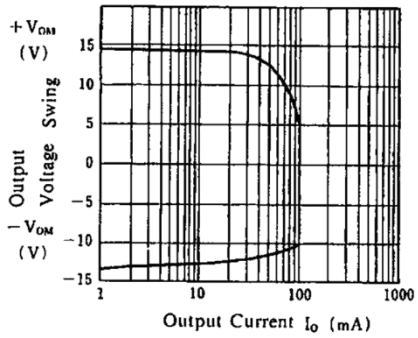

Equlvalent Input Noise Voltage vs.Frequency

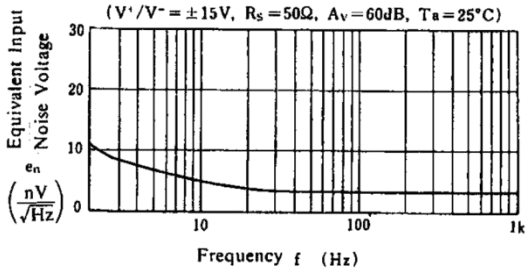

Operating Current vs.Temperature

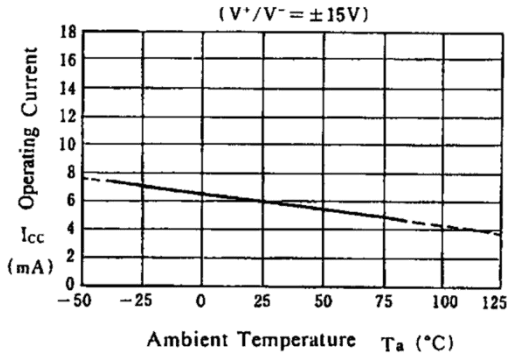

Output Voltage Swing vs. Temperature

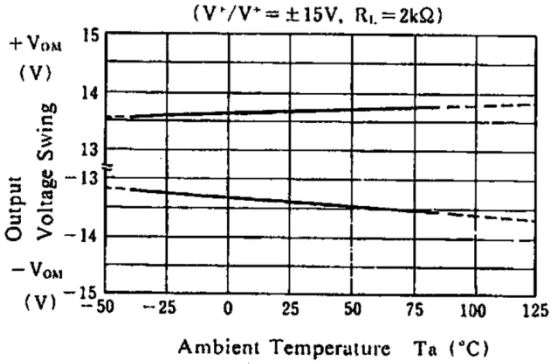

TYPICAL CHARACTERISTICS

Input offset Voltage vs.Temperature

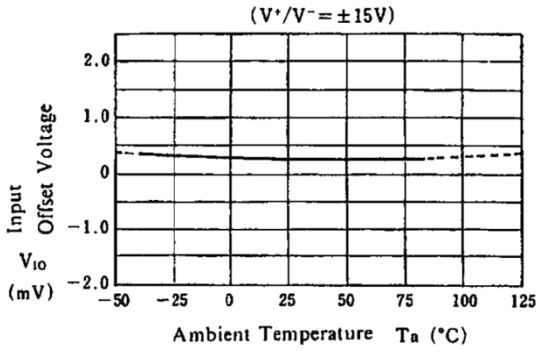

Input bias current vs.Temperature

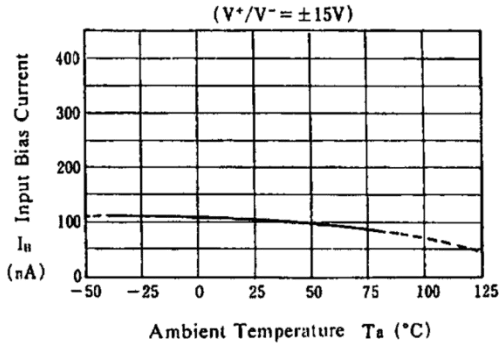

Maximum Output Voltage Swing vs.Operating Voltage

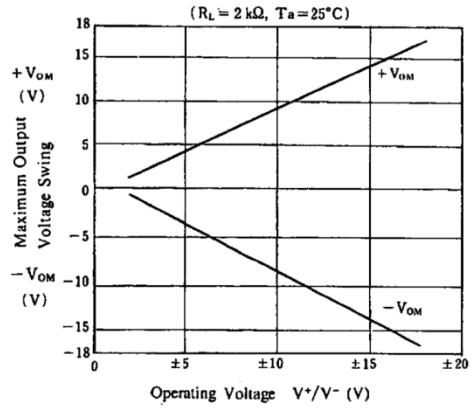

Operating Current vs.Operating

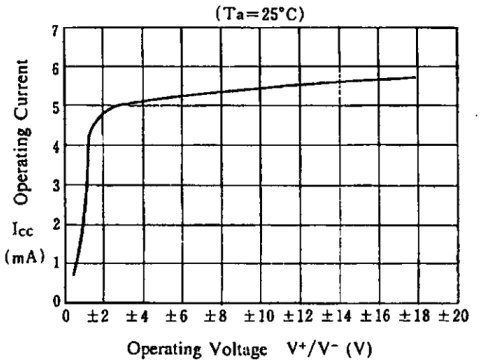

Total Harmonic Distortion vs.Output Voltage

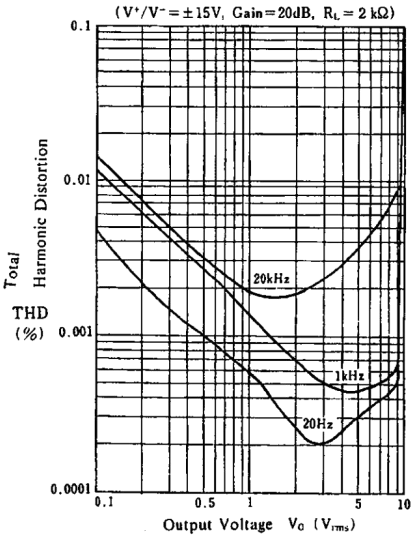

Voltage Gain Phase vs.Frequency

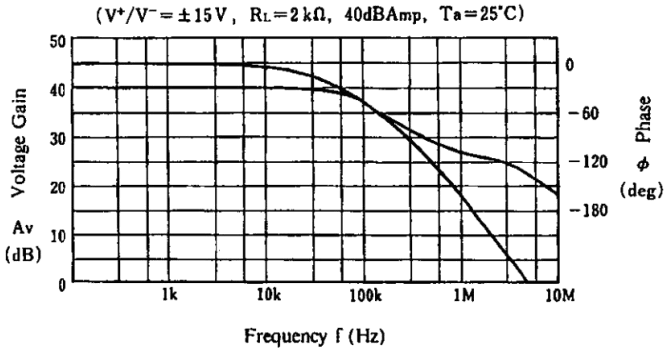

PHYSICAL DIMENSIONS

DIP-8

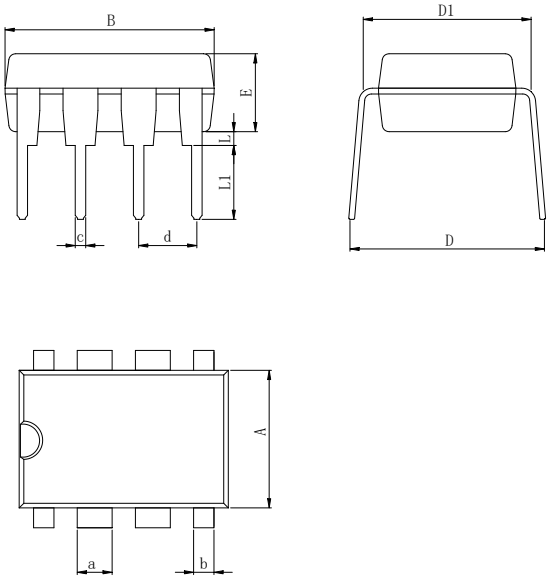

Dimensions In Millimeters(DIP-8)											
Symbol:	A	B	D	D1	E	L	L1	a	b	c	d
Min:	6.10	9.00	8.10	7.42	3.10	0.50	3.00	1.50	0.85	0.40	2.54 BSC
Max:	6.68	9.50	10.9	7.82	3.55	0.70	3.60	1.55	0.90	0.50	

SOP-8

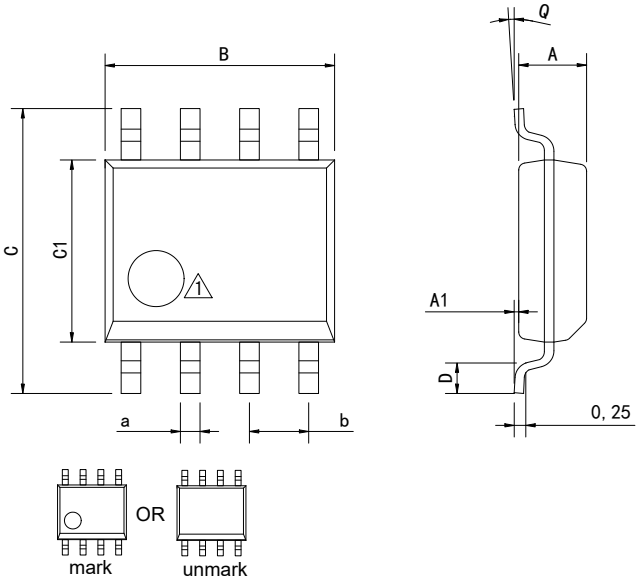

1 Package top mark may be in lower left corner or unmark

Dimensions In Millimeters(SOP-8)									
Symbol:	A	A1	B	C	C1	D	Q	a	b
Min:	1.35	0.05	4.90	5.80	3.80	0.40	0°	0.35	1.27 BSC
Max:	1.55	0.20	5.10	6.20	4.00	0.80	8°	0.45	

PHYSICAL DIMENSIONS

MSOP-8

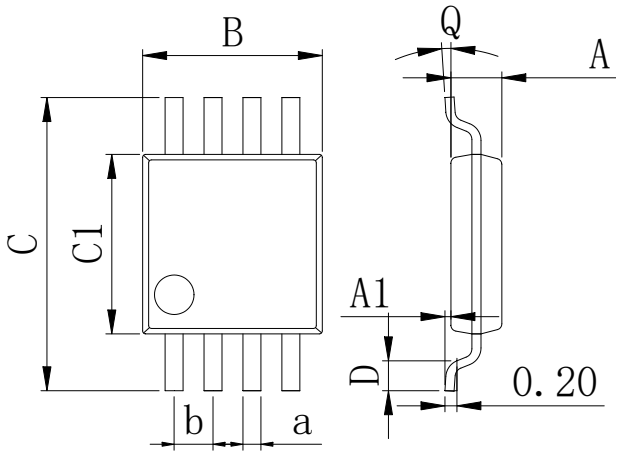

Dimensions In Millimeters(MSOP-8)									
Symbol:	A	A1	B	C	C1	D	Q	a	b
Min:	0.80	0.05	2.90	4.75	2.90	0.35	0°	0.25	0.65 BSC
Max:	0.90	0.20	3.10	5.05	3.10	0.75	8°	0.35	

DFN-8 3*3_0.65 Pin spacing

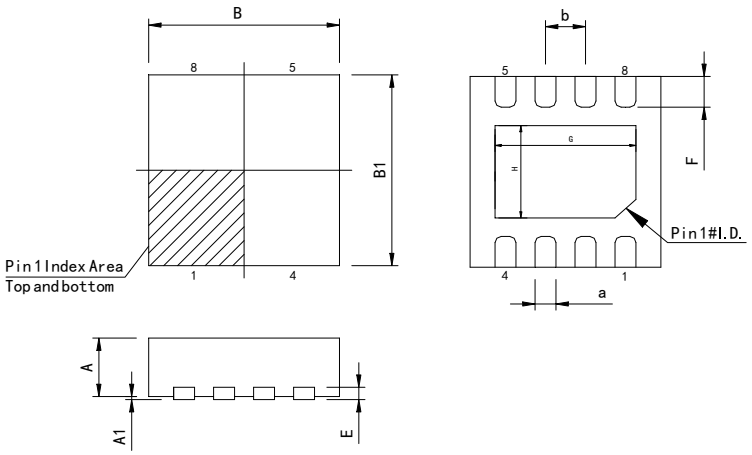

Dimensions In Millimeters(DFN-8 3*3)										
Symbol:	**A**	**A1**	**B**	**B1**	**E**	**F**	**G**	**H**	**a**	**b**
Min:	0.85	0.00	2.90	2.90	0.20	0.30	2.1	1.3	0.20	0.65 BSC
Max:	0.95	0.05	3.10	3.10	0.25	0.50	2.5	1.7	0.34	

REVISION HISTORY

REVISION NUMBER	DATE	REVISION	PAGE
V1.0	2014-6	New	1-9
V1.1	2020-9	Document reformatting	1-9
V1.2	2024-11	Update Lead Temperature	3
V1.3	2025-9	The minimum Operating voltage is changed from ±2V to ±2.25V	1
V1.4	2025-12	Update important statements、Update SOP-8 Dimension drawing	6、9
V1.5	2026-9	Update DFN-8 Dimension drawing	7

IMPORTANT STATEMENT:

Huaguan Semiconductor reserves the right to change products and services offered without prior notice. Customers should obtain the latest relevant information before placing orders and verify that such information is current and complete. Huaguan Semiconductor assumes no responsibility or liability for altered documents.

Customers are responsible for complying with safety standards and implementing safety measures when using Huaguan Semiconductor products in system design and end-product manufacturing. You assume full responsibility for: selecting the appropriate Huaguan Semiconductor products for your application; designing, validating, and testing your application; and ensuring that your application complies with applicable standards and all other safety, security, or other requirements. This is to prevent potential risks that may lead to personal injury or property damage.

Huaguan Semiconductor products are not approved for use in life support, military, aerospace, or other high-risk applications. Huaguan products are neither intended nor warranted for use in such systems or equipment. Any failure or malfunction may lead to personal injury or severe property damage. Such applications are deemed "Unsafe Use." Unsafe Use includes, but is not limited to: surgical and medical equipment, nuclear energy control equipment, aircraft or spacecraft instruments, control or operation of vehicle power, braking, or safety systems, traffic signal instruments, all types of safety devices, and any other applications intended to support or sustain life. Huaguan Semiconductor shall not be liable for consequences resulting from Unsafe Use in these fields. Users must independently evaluate and assume all risks. Any issues, liabilities, or losses arising from the use of products beyond their approved applications shall be solely borne by the user. Users may not claim any compensation from Huaguan Semiconductor based on these terms. If any third party claims against Huaguan Semiconductor due to such Unsafe Use, the user shall compensate Huaguan Semiconductor for all resulting damages and liabilities.

Huaguan Semiconductor provides technical and reliability data (including datasheets), design resources (including reference designs), application or other design advice, web tools, safety information, and other resources for its semiconductor products. However, no guarantee is made that these resources are free from defects, and no express or implied warranties are provided. The use of testing and other quality control techniques is limited to Huaguan Semiconductor's quality assurance scope. Not all parameters of each device are tested.

Huaguan Semiconductor's documentation authorizes you to use these resources only for developing applications related to the products described herein. You are not granted rights to any other intellectual property of Huaguan Semiconductor or any third party. Any other reproduction or display of these resources is strictly prohibited. You shall fully indemnify Huaguan Semiconductor and its agents against any claims, damages, costs, losses, and liabilities arising from your use of these resources. Huaguan Semiconductor shall not be held responsible.