3.3V 128M-BIT SERIAL FLASH MEMORY WITH DUAL/QUAD SPI

1. FEATURE

SOP-8 208mil

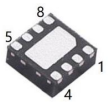

DFN-8 4*4

- **New Family of SPI Flash Memories**
  - —HG25Q128: 128M-bit / 16M-byte
  - —Standard SPI: CLK, /CS, DI, DO, /WP, /Hold
  - —Dual SPI: CLK, /CS, IO0, IO1, /WP, /Hold
  - —Quad SPI: CLK, /CS, IO0, IO1, IO2, IO3
  - —Software & Hardware Reset
- **Highest Performance Serial Flash**
  - —104MHz Single SPI clocks
  - —160/320MHz equivalent Dual/Quad SPI
  - —More than 100,000 erase/program cycles
  - —More than 20-year data retention
- **Efficient "Continuous Read"**
  - —Continuous Read with 8/16/32/64-Byte Wrap
  - —As few as 8 clocks to address memo
- **Low Power, Wide Temperature Range**
  - —Single 2.7 to 3.6V supply
  - —4mA active current, <3μA Power-down (typ.)
  - —-40°C to +85°C operating range
- **Flexible Architecture with 4KB sectors**
  - —Uniform Sector/Block Erase (4K/32K/64K-Byte)
  - —Program 1 to 256 byte per programmable page
  - —Erase/Program Suspend & Resume
- **Advanced Security Features**
  - —Software and Hardware Write-Protect
  - —Power Supply Lock-Down and OTP protection
  - —Top/Bottom, Complement array protection
  - —64-Bit Unique ID for each device
  - —Discoverable Parameters (SFDP) Register
  - —3X256-Bytes Security Registers with OTP locks
  - —Volatile & Non-volatile Status Register Bits
- **Space Efficient Packaging**
  - —8-pin SOP 208-mil
  - —8-pad DFN 4x4-mm
  - —All Pb-free packages are RoHS compliant

2. ORDERING INFORMATION

DEVICE	Package Type	MARKING	Packing	Packing Qty
HG25Q128M/TR	SOP-8-208Mil	25Q128	REEL	2500pcs/Reel
HG25Q128MW/TR	SOP-8-208Mil	25Q128	REEL	2500pcs/Reel
HG25Q128DQ/TR HG25Q128DQ4/TR	DFN-8 4*4	25Q128	REEL	5000pcs/Reel*

*old：4000pcs/reel,New packaging quantity of 5000 pcs/reel after December 2025.

3. GENERAL DESCRIPTIONS

The HG25Q128 (128M-bit) Serial Flash memory provides a storage solution for systems with limited space, pins and power. The 25Q series offers flexibility and performance well beyond ordinary Serial Flash devices. They are ideal for code shadowing to RAM, executing code directly from Dual/Quad SPI (XIP) and storing voice, text and data. The device operates on a single 2.7V to 3.6V power supply with current consumption as low as 3μA for power-down. All devices are offered in space-saving packages.

The HG25Q128 array is organized into 65,536 programmable pages of 256-bytes each. Up to 256 bytes can be programmed at a time. Pages can be erased in groups of 16 (4KB sector erase), groups of 128

(32KB block erase), groups of 256 (64KB block erase) or the entire chip (chip erase). The HG25Q128 has 4,096 erasable sectors and 256 erasable blocks respectively. The small 4KB sectors allow for greater flexibility in applications that require data and parameter storage. (See Figure 2.)

The HG25Q128 supports the standard Serial Peripheral Interface (SPI), Dual/Quad I/O SPI: Serial Clock,Chip Select, Serial Data I/O0 (DI), I/O1 (DO), I/O2 and I/O3. Single SPI clock frequencies of HG25Q128 of up to 104MHz are supported, and equivalent clock rates of 208MHz (104MHz x 2) for Dual I/O and 320MHz (80MHz x 4) for Quad I/O when using the Fast Read Dual/Quad I/O are supported. These transfer rates can outperform standard Asynchronous 8 and 16-bit Parallel Flash memories.

Additionally, the device supports JEDEC standard manufacturer and device ID and SFDP, and a 64-bit Unique Serial Number and three 256-bytes Security Registers.

4. PACKAGE TYPES AND PIN CONFIGURATIONS

4.1. Pin Configuration SOP 208MiL

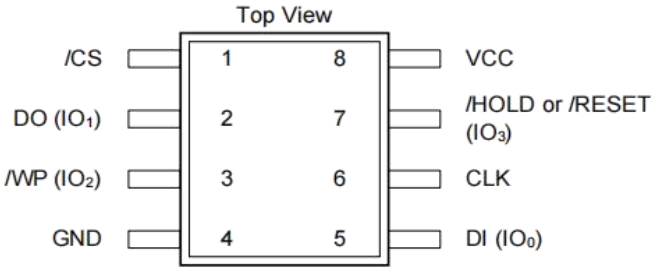

Figure 1a. HG25Q128 Pin Assignments, 8 -pin SOP 208-mil

4.2. Pad Configuration DFN-8 4*4

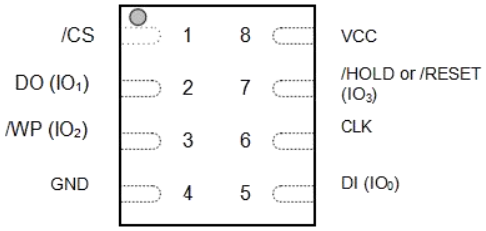

Figure 1b. HG25Q128 Pad Assignments, 8-pad DFN-8 4*4

Pin Description

PAD NO.	PAD NAME	I/O	FUNCTION
1	/CS	I	Chip Select Input
2	DO (IO1)	I/O	Data Output (Data Input Output 1)(1)
3	/WP (IO2)	I/O	Write Protect Input (Data Input Output 2)(2)
4	GND		Ground
5	DI (IO0)	I/O	Data Input (Data Input Output 0)(1)
6	CLK	I	Serial Clock Input
7	/HOLD or /RESET(IO3)	I/O	Hold or Reset Input (Data Input Output 3)(2)
8	VCC		Power Supply

Notes:

1. IO0 and IO1 are used for Standard and Dual SPI instructions
2. IO0 – IO3 are used for Quad SPI instructions, /HOLD (or /RESET) function is only available for Standard/Dual SPI.

5. PIN DESCRIPTIONS

5.1. Chip Select (/CS)

The SPI Chip Select (/CS) pin enables and disables device operation. When /CS is high the device is deselected and the Serial Data Output (DO, or IO0, IO1, IO2, IO3) pins are at high impedance. When deselected, the devices power consumption will be at standby levels unless an internal erase, program or write status register cycle is in progress. When /CS is brought low the device will be selected, power consumption will increase to active levels and instructions can be written to and data read from the device. After power-up, /CS must transition from high to low before a new instruction will be accepted. The /CS input must track the VCC supply level at power-up and power-down (see “Write Protection”). If needed a pull-up resister on the /CS pin can be used to accomplish this.

5.2. Serial Data Input, Output and IOs (DI, DO and IO0, IO1, IO2, IO3)

The HG25Q128 supports standard SPI, Dual SPI and Quad SPI operation. Standard SPI instructions use the unidirectional DI (input) pin to serially write instructions, addresses or data to the device on the rising edge of the Serial Clock (CLK) input pin. Standard SPI also uses the unidirectional DO (output) to read data or status from the device on the falling edge of CLK.

Dual and Quad SPI instructions use the bidirectional IO pins to serially write instructions, addresses or data to the device on the rising edge of CLK and read data or status from the device on the falling edge of CLK. Quad SPI instructions require the non-volatile Quad Enable bit (QE) in Status Register-2 to be set. When QE=1, the /WP pin becomes IO2 and the /HOLD pin becomes IO3.

5.3. Write Protect (/WP)

The Write Protect (/WP) pin can be used to prevent the Status Register from being written. Used in conjunction with the Status Register’s Block Protect (CMP, SEC, TB, BP2, BP1 and BP0) bits and Status Register Protect (SRP) bits, a portion as small as a 4KB sector or the entire memory array can be hardware protected. The /WP pin is active low.

5.4. HOLD (/HOLD)

The /HOLD pin allows the device to be paused while it is actively selected. When /HOLD is brought low, while /CS is low, the DO pin will be at high impedance and signals on the DI and CLK pins will be ignored (don't care). When /HOLD is brought high, device operation can resume. The /HOLD function can be useful when multiple devices are sharing the same SPI signals. The /HOLD pin is active low. When the QE bit of Status Register-2 is set for Quad I/O, the /HOLD pin function is not available since this pin is used for IO3. See Figure 1a-c for the pin configuration of Quad I/O operation.

5.5. Serial Clock (CLK)

The SPI Serial Clock Input (CLK) pin provides the timing for serial input and output operations. ("See SPI Operations")

BLOCK DIAGRAM

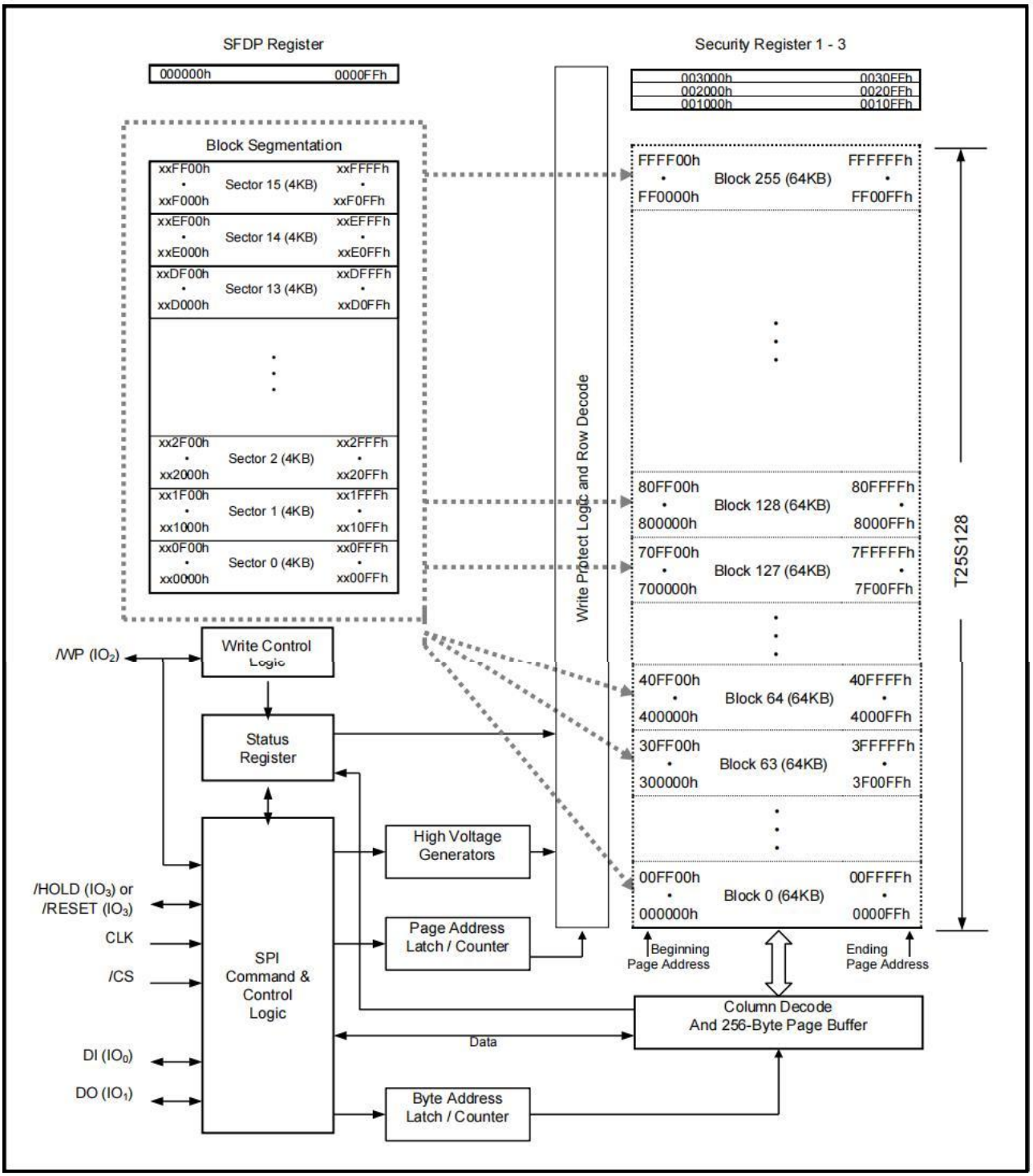

Figure 2.HG25Q128 Serial Flash Memory Block Diagram

6. FUNCTIONAL DESCRIPTIONS

6.1. Standard SPI Instructions

The HG25Q128 is accessed through an SPI compatible bus consisting of four signals: Serial Clock(CLK), Chip Select (/CS), Serial Data Input (DI) and Serial Data Output (DO). Standard SPI instructions use the DI input pin to serially write instructions, addresses or data to the device on the rising edge of CLK. The DO output pin is used to read data or status from the device on the falling edge of CLK.

SPI bus operation Mode 0 (0,0) and 3 (1,1) are supported. The primary difference between Mode 0 and Mode 3 concerns the normal state of the CLK signal when the SPI bus master is in standby and data is not being transferred to the Serial Flash. For Mode 0, the CLK signal is normally low on the falling and rising edges of /CS. For Mode 3, the CLK signal is normally high on the falling and rising edges of /CS.

6.2. Dual SPI Instructions

The HG25Q128 supports Dual SPI operation when using instructions such as “Fast Read Dual Output (3Bh)” and “Fast Read Dual I/O (BBh)”. These instructions allow data to be transferred to or from the device at two to three times the rate of ordinary Serial Flash devices. The Dual SPI Read instructions are ideal for quickly downloading code to RAM upon power-up (code-shadowing) or for executing non-speed critical code directly from the SPI bus (XIP). When using Dual SPI instructions, the DI and DO pins become bidirectional I/O pins: IO0 and IO1.

6.3. Software Reset

The HG25Q128 can be reset to the initial power-on state by a software Reset sequence. This sequence must include two consecutive instructions: Enable Reset (66h) & Reset (99h). If the instruction sequence is successfully accepted, the device will take approximately 30μS (tRST) to reset.

6.4. Write Protection

Applications that use non-volatile memory must take into consideration the possibility of noise and other adverse system conditions that may compromise data integrity. To address this concern, the HG25Q128 provides several means to protect the data from inadvertent writes.

6.4.1. Write Protect Features

- Device resets when VCC is below threshold
- Time delay write disable after Power-up
- Write enable/disable instructions and automatic write disable after erase or program
- Software and Hardware (/WP pin) write protection using Status Registers
- Additional Individual Block/Sector Locks for array protection
- Write Protection using Power-down instruction
- Lock Down write protection for Status Register until the next power-up

Upon power-up or at power-down, the HG25Q128 will maintain a reset condition while VCC is below the threshold value of V_{WI}, (See Power-up Timing and Voltage Levels). While reset, alloperations are disabled and no instructions are recognized. During power-up and after the VCC voltageexceeds V_{WI}, all program and erase related instructions are further disabled for a time delay of t_{PUW}. Thisincludes the Write Enable, Page Program, Sector Erase, Block Erase, Chip Erase and the Write StatusRegister instructions. Note that the chip

select pin (/CS) must track the VCC supply level at power-up until the VCC-min level and t_{VSL} time delay is reached, and it must also track the VCC supply level at power-down to prevent adverse command sequence. If needed a pull-up resister on /CS can be used toaccomplish this.

After power-up the device is automatically placed in a write-disabled state with the Status Register Write Enable Latch (WEL) set to a 0. A Write Enable instruction must be issued before a Page Program, Sector Erase, Block Erase, Chip Erase or Write Status Register instruction will be accepted. After completing a program, erase or write instruction the Write Enable Latch (WEL) is automatically cleared to a write- disabled state of 0.

Software controlled write protection is facilitated using the Write Status Register instruction and setting the Status Register Protect (SRP1, SRP0) and Block Protect (CMP, TB, BP[3:0]) bits. These settings allow a portion or the entire memory array to be configured as read only. Used in conjunction with the Write Protect (/WP) pin, changes to the Status Register can be enabled or disabled under hardware control. See Status Register section for further information. Additionally, the Power-down instruction offers an extra level of write protection as all instructions are ignored except for the Release Power-down instruction.

7. STATUS AND CONFIGURATION REGISTERS

Three Status and Configuration Registers are provided for HG25Q128. The Read Status Register-1/2/3 instructions can be used to provide status on the availability of the flash memory array, whether the device is write enabled or disabled, the state of write protection, Quad SPI setting, Security Register lock status, Erase/Program Suspend status, output driver strength, power-up. The Write Status Register instruction can be used to configure the device write protection features, Quad SPI setting, Security Register OTP locks, and output driver strength. Write access to the Status Register is controlled by the state of the non-volatile Status Register Protect bits (SRP0), the Write Enable instruction, and during Standard/Dual SPI operations.

7.1. Status Registers

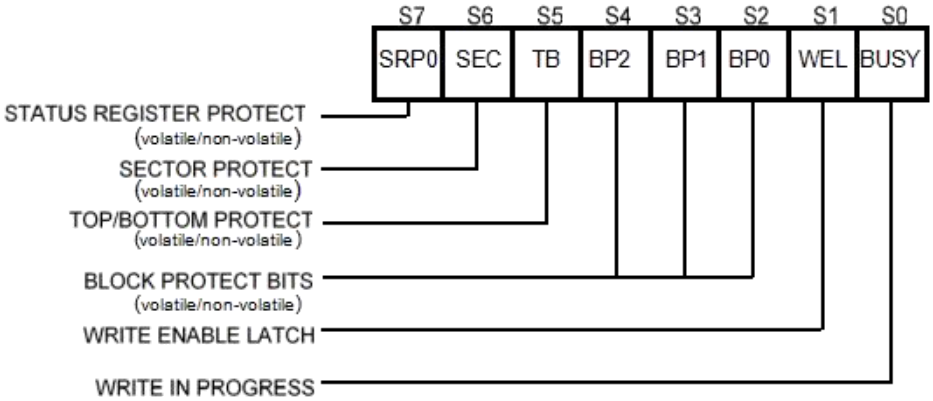

Figure 3a. Status Register-1

7.1.1. Erase/Write In Progress(BUSY)–Status Only

BUSY is a read only bit in the status register (S0) that is set to a 1 state when the device is executing a Page Program, Quad Page Program, Sector Erase, Block Erase, Chip Erase, Write Status Register or Erase/Program Security Register instruction. During this time the device will ignore further instructions except for the Read Status Register and Erase/Program Suspend instruction (see tW, tPP, tSE, tBE, and tCE in AC Characteristics). When the program, erase or write status/security register instruction has completed, the BUSY bit will be cleared to a 0 state indicating the device is ready for further instructions.

7.1.2. Write Enable Latch (WEL)–Status Only

Write Enable Latch (WEL) is a read only bit in the status register (S1) that is set to 1 after executing a Write Enable Instruction. The WEL status bit is cleared to 0 when the device is write disabled. A write disable state occurs upon power-up or after any of the following instructions: Write Disable, Page Program, Quad Page Program, Sector Erase, Block Erase, Chip Erase, Write Status Register, Erase Security Register and Program Security Register.

7.1.3. Block Protect Bits (BP2, BP1, BP0) – Volatile/Non-Volatile Writable

The Block Protect Bits (BP2, BP1, BP0) are non-volatile read/write bits in the status register (S4, S3, and S2) that provide Write Protection control and status. Block Protect bits can be set using the Write Status Register Instruction (see tW in AC characteristics). All, none or a portion of the memory array can be protected from Program and Erase instructions (see Status Register Memory Protection table). The factory default setting for the Block Protection Bits is 0, none of the array protected.

7.1.4. Top/Bottom Block Protect (TB) – Volatile/Non-Volatile Writable

The non-volatile Top/Bottom bit (TB) controls if the Block Protect Bits (BP2, BP1, BP0) protect from the Top (TB=0) or the Bottom (TB=1) of the array as shown in the Status Register Memory Protection table. The factory default setting is TB=0. The TB bit can be set with the Write Status Register Instruction depending on the state of the SRP1, SRP0 and WEL bits.

7.1.5. Sector/Block Protect Bit (SEC) – Volatile/Non-Volatile Writable

The non-volatile Sector/Block Protect bit (SEC) controls if the Block Protect Bits (BP2, BP1, BP0) protect either 4KB Sectors (SEC=1) or 64KB Blocks (SEC=0) in the Top (TB=0) or the Bottom (TB=1) of the array as shown in the Status Register Memory Protection table. The default setting is SEC=0.

7.1.6. Complement Protect (CMP) – Volatile/Non-Volatile Writable

The Complement Protect bit (CMP) is a non-volatile read/write bit in the status register (S14). It is used in conjunction with SEC, TB, BP2, BP1 and BP0 bits to provide more flexibility for the array protection. Once CMP is set to 1, previous array protection set by SEC, TB, BP2, BP1 and BP0 will be reversed. For instance, when CMP=0, a top 64KB block can be protected while the rest of the array is not; when CMP=1, the top 64KB block will become unprotected while the rest of the array become read-only. Please refer to the Status Register Memory Protection table for details. The default setting is CMP=0.

7.1.7. Status Register Protect (SRP1, SRP0) – Volatile/Non-Volatile Writable

Three Status and Configuration Registers are provided for HG25Q128. The Read Status Register-1/2/3 instructions can be used to provide status on the availability of the flash memory array, whether the device is

write enabled or disabled, the state of write protection, Quad SPI setting, Security Register lock status, Erase/Program Suspend status, and output driver strength, The Write Status Register instruction can be used to configure the device write protection features, Quad SPI setting, Security Register OTP locks, output driver. Write access to the Status Register is controlled by the state of the non-volatile Status Register Protect bits (SRP1, SRP0), the Write Enable instruction, and during Standard/Dual SPI operations, the /WP pin.

SRP1	SRP0	/WP	Status Register	Description
0	0	X	Software Protection	/WP pin has no control. The Status register can bewritten to after a Write Enable instruction, WEL=1.[Factory Default]
0	1	0	Hardware Protected	When /WP pin is low the Status Register locked andcannot be written to.
0	1	1	Hardware Unprotected	When /WP pin is high the Status register is unlockedand can be written to after a Write Enable instruction,WEL=1.
1	0	X	Power Supply Lock-Down	Status Register is protected and cannot be written toagain until the next power-down, power-up cycle.(1)
1	1	X	One Time Program	Status Register is permanently protected and cannot be written to.

Notes:

When SRP1, SRP0 = (1, 0), a power-down, power-up cycle will change SRP1, SRP0 to (0, 0) state.

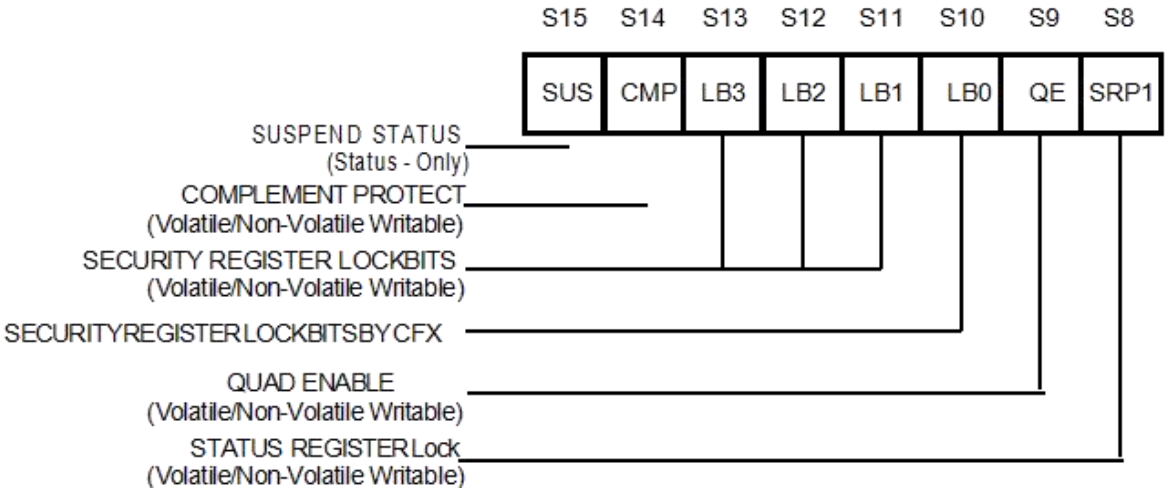

Figure 3b. Status Register-2

7.1.8. Erase/Program Suspend Status (SUS) – *Status Only*

The Suspend Status bit is a read only bit in the status register (S15) that is set to 1 after executing a Erase/Program Suspend (75h) instruction. The SUS status bit is cleared to 0 by Erase/Program Resume (7Ah) instruction as well as a power-down, power-up cycle.

7.1.9. Security Register Lock Bits (LB3, LB2, LB1) – Volatile/Non-Volatile OTP Writable

The Security Register Lock Bits (LB3, LB2, LB1, LB0) are non-volatile One Time Program (OTP) bits in Status Register (S13, S12, S11, S10) that provide the write protect control and status to the Security Registers. The default state of LB3-1 is 0, Security Registers are unlocked. The default state of LB0 is 1. LB3-1 can be set to 1 individually using the Write Status Register instruction. LB3-1 are One Time Programmable (OTP), once it's set to 1, the corresponding 256-Byte Security Register will become read- only permanently.LB0 value should be considered don't care for read. This bit is set to 1. Security register 0 contains the Serial Flash Discoverable Parameters and is always programmed and locked by CFX.

7.1.10. Quad Enable (QE) – Volatile/Non-Volatile Writable

The Quad Enable (QE) bit is a non-volatile read/write bit in the status register (S9) that enables Quad SPI operation. When the QE bit is set to a 0 state (factory default for part numbers with ordering options "IM" & "JM"), the /HOLD are enabled, the device operates in Standard/Dual SPI modes. When the QE bit is set to a 1 (factory fixed default for part numbers with ordering options "IQ" & "JQ"), the Quad IO2 and IO3 pins are enabled, and /HOLD function is disabled, the device operates in Standard/Dual/Quad SPI modes.

Note: QE bit is set to a 0 state, factory default for part numbers with ordering options "IM" or "JM"; please see HG25Q128-DTR data sheet.

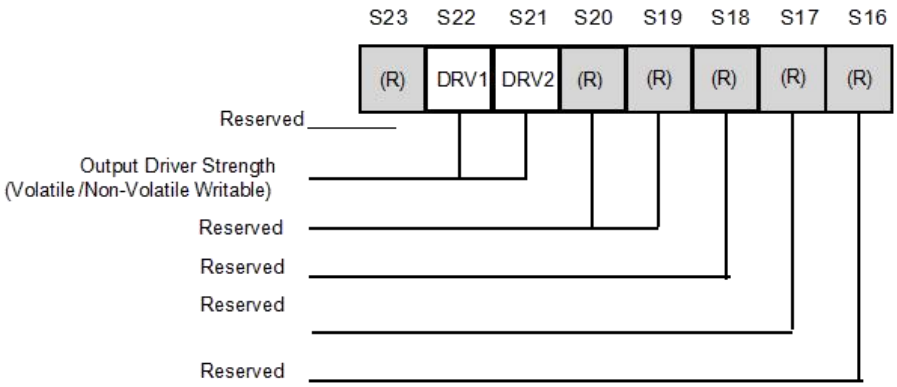

Figure 3c. Status Register-3

7.1.11. Output Driver Strength (DRV1, DRV0) – Volatile/Non-Volatile Writable

The DRV1 & DRV0 bits are used to determine the output driver strength for the Read operations.

DRV1, DRV0	Driver Strength
0, 0	100%
0, 1	75%
1, 0	50%(default)
1, 1	25%

7.1.12. Reserved Bits – Non Functional

There are a few reserved Status Register bits that may be read out as a "0" or "1". It is recommended to ignore the values of those bits. During a "Write Status Register" instruction, the Reserved Bits can be written as "0", but there will not be any effects.

7.1.13. HG25Q128 Status Register Memory Protection (CMP = 0)

STATUS REGISTER(1)					HG25Q128 (128M -BIT) MEMORY PROTECTION(3)			
SEC	TB	BP2	BP1	BP0	PROTECTED BLOCK(S)	PROTECTED ADDRESSES	PROTECTED DENSITY	PROTECTED PORTION(2)
X	X	0	0	0	NONE	NONE	NONE	NONE
0	0	0	0	1	252 thru 255	FC0000h – FFFFFFh	256KB	Upper 1/64
0	0	0	1	0	248 thru 255	F80000h – FFFFFFh	512KB	Upper 1/32
0	0	0	1	1	240 thru 255	F00000h – FFFFFFh	1MB	Upper 1/16
0	0	1	0	0	224 thru 255	E00000h – FFFFFFh	2MB	Upper 1/8
0	0	1	0	1	192 thru 255	C00000h – FFFFFFh	4MB	Upper 1/4
0	0	1	1	0	128 thru 255	800000h – FFFFFFh	8MB	Upper 1/2
0	1	0	0	1	0 thru 3	000000h – 03FFFFh	256KB	Lower 1/64
0	1	0	1	0	0 thru 7	000000h – 07FFFFh	512KB	Lower 1/32
0	1	0	1	1	0 thru 15	000000h – 0FFFFFh	1MB	Lower 1/16
0	1	1	0	0	0 thru 31	000000h – 1FFFFFh	2MB	Lower 1/8
0	1	1	0	1	0 thru 63	000000h – 3FFFFFh	4MB	Lower 1/4
0	1	1	1	0	0 thru 127	000000h – 7FFFFFh	8MB	Lower 1/2
X	X	1	1	1	0 thru 255	000000h – FFFFFFh	16MB	ALL
1	0	0	0	1	255	FFF000h – FFFFFFh	4KB	U - 1/4096
1	0	0	1	0	255	FFE000h – FFFFFFh	8KB	U - 1/2048
1	0	0	1	1	255	FFC000h – FFFFFFh	16KB	U - 1/1024
1	0	1	0	X	255	FF8000h – FFFFFFh	32KB	U - 1/512
1	1	0	0	1	0	000000h – 000FFFh	4KB	L - 1/4096
1	1	0	1	0	0	000000h – 001FFFh	8KB	L - 1/2048
1	1	0	1	1	0	000000h – 003FFFh	16KB	L - 1/1024
1	1	1	0	X	0	000000h – 007FFFh	32KB	L - 1/512

Notes:
1. X = don't care
2. L = Lower; U = Upper
3. If any Erase or Program command specifies a memory region that contains protected data portion, this command will be ignored.

7.1.14. HG25Q128 Status Register Memory Protection (CMP = 1)

STATUS REGISTER[4]					HG25Q128 (128M-BIT) MEMORY PROTECTION[6]			
SEC	TB	BP2	BP1	BP0	PROTECTED BLOCK(S)	PROTECTED ADDRESSES	PROTECTED DENSITY	PROTECTED PORTION[5]
X	X	0	0	0	0 thru 255	000000h - FFFFFFh	16MB	ALL
0	0	0	0	1	0 thru 251	000000h - FBFFFFh	16,128KB	Lower 63/64
0	0	0	1	0	0 thru 247	000000h – F7FFFFh	15,872KB	Lower 31/32
0	0	0	1	1	0 thru 239	000000h - EFFFFFh	15MB	Lower 15/16
0	0	1	0	0	0 thru 223	000000h - DFFFFFh	14MB	Lower 7/8
0	0	1	0	1	0 thru 191	000000h - BFFFFFh	12MB	Lower 3/4
0	0	1	1	0	0 thru 127	000000h - 7FFFFFh	8MB	Lower 1/2[7]
0	1	0	0	1	4 thru 255	040000h - FFFFFFh	16,128KB	Upper 63/64
0	1	0	1	0	8 thru 255	080000h - FFFFFFh	15,872KB	Upper 31/32
0	1	0	1	1	16 thru 255	100000h - FFFFFFh	15MB	Upper 15/16
0	1	1	0	0	32 thru 255	200000h - FFFFFFh	14MB	Upper 7/8
0	1	1	0	1	64 thru 255	400000h - FFFFFFh	12MB	Upper 3/4
0	1	1	1	0	128 thru 255	800000h - FFFFFFh	8MB	Upper 1/2[7]
X	X	1	1	1	NONE	NONE	NONE	NONE
1	0	0	0	1	0 thru 255	000000h – FFEFFFh	16,380KB	L - 4095/4096
1	0	0	1	0	0 thru 255	000000h – FFDFFFh	16,376KB	L - 2047/2048
1	0	0	1	1	0 thru 255	000000h – FFBFFFh	16,368KB	L - 1023/1024
1	0	1	0	X	0 thru 255	000000h – FF7FFFh	16,352KB	L - 511/512
1	1	0	0	1	0 thru 255	001000h – FFFFFFh	16,380KB	U - 4095/4096
1	1	0	1	0	0 thru 255	002000h – FFFFFFh	16,376KB	U - 2047/2048
1	1	0	1	1	0 thru 255	004000h – FFFFFFh	16,368KB	U -1023/1024
1	1	1	0	X	0 thru 255	008000h – FFFFFFh	16,352KB	U - 511/512

Notes:

4. X = don't care
5. L = Lower; U = Upper
6. If any Erase or Program command specifies a memory region that contains protected data portion, thiscommand will be ignored.
7. Chip erase Protect is not supported when BP2=1, BP1=1 and BP0=0 in this version, please contact CFX for details.

9. INSTRUCTIONS

The Standard/Dual/Quad SPI instruction set of the HG25Q128 consists of 47 basic instructions that are fully controlled through the SPI bus (see Instruction Set Table1-2). Instructions are initiated with the falling edge of Chip Select (/CS). The first byte of data clocked into the DI input provides the instruction code. Data on the DI input is sampled on the rising edge of clock with most significant bit (MSB) first. Instructions vary in length from a single byte to several bytes and may be followed by address bytes, data bytes, dummy bytes (don't care), and in some cases, a combination.

Instructions are completed with the rising edge of edge /CS. Clock relative timing diagrams for each instruction are included in Figures 4 . All read instructions can be completed after any clocked bit.However,allinstructions that Write, Program or Erase must complete on a byte boundary (/CS driven high after a full 8-bits have been clocked) otherwise the instruction will be ignored. This feature further protects the device from inadvertent writes. Additionally, while the memory is being programmed or erased, or when the Status Register is being written, all instructions except for Read Status Register will be ignored until the program or erase cycle has completed.

9.1. Device ID and Instruction Set Tables

9.1.1. Identification

	(MF7 - MF0)	
Chuangfeixin Serial Flash	1Ch	
Device ID	**(ID7 - ID0)**	**(ID15 - ID0)**
Instruction	**90h, 5Ah**	**9Fh**
HG25Q128	17h	4018h

9.1.2. Instruction Set Table 1 (Standard SPI Instructions)(1)

Data Input Output	Byte 1	Byte 2	Byte 3	Byte 4	Byte 5	Byte 6	Byte 7
Number of Clock(1-1-1)	**8**	**8**	**8**	**8**	**8**	**8**	**8**
Write Enable	**06h**						
Volatile SR Write Enable	**50h**						
Write Disable	**04h**						
Release Power-down	**ABh**						
Manufacturer/Device ID	**90h**	Dummy	Dummy	00h	(MF7-MF0)	(ID7-ID0)	
JEDEC ID	**9Fh**	(MF7-MF0)	(ID15-ID8)	(ID7-ID0)			
Read Unique ID	**5Ah**	00h	00h	A7-A0	Dummy	D7-D0 …	
Read Data	**03h**	A23-A16	A15-A8	A7-A0	(D7-D0)		
Fast Read	**0Bh**	A23-A16	A15-A8	A7-A0	Dummy	(D7-D0)	
Page Program	**02h**	A23-A16	A15-A8	A7-A0	D7-D0	D7-D0(3)	
Sector Erase (4KB)	**20h**	A23-A16	A15-A8	A7-A0			
Block Erase (32KB)	**52h**	A23-A16	A15-A8	A7-A0			
Block Erase (64KB)	**D8h**	A23-A16	A15-A8	A7-A0			
Chip Erase	**C7h/60h**						
Read Status Register-1	**05h**	(S7-S0)(2)					
Write Status Register-1(4)	**01h**	(S7-S0)(4)					
Read Status Register-2	**35h**	(S15-S8)(2)					
Write Status Register-2	**31h**	(S15-S8)					
Read Status Register-3	**15h**	(S23-S16)(2)					
Write Status Register-3	**11h**	(S23-S16)					
Read SFDP Register	**5Ah**	00	00	A7-A0	Dummy	(D7-D0)	
Erase Security Register(5)	**44h**	A23-A16	A15-A8	A7-A0			
Program Security Register(5)	**42h**	A23-A16	A15-A8	A7-A0	D7-D0	D7-D0(3)	
Read Security Register(5)	**48h**	A23-A16	A15-A8	A7-A0	Dummy	(D7-D0)	
Erase / Program Suspend	**75h**						
Erase / Program Resume	**7Ah**						
Power-down	**B9h**						
Enable Reset	**66h**						
Reset Device	**99h**						

9.1.3. Instruction Set Table 2 (Dual/Quad SPI Instructions)

Data Input Output	Byte 1	Byte 2	Byte 3	Byte 4	Byte 5	Byte 6	Byte 7	Byte 8	Byte 9
Number of Clock(1-1-2)	8	8	8	8	4	4	4	4	4
Fast Read Dual Output	3Bh	A23-A16	A15-A8	A7-A0	Dummy	Dummy	(D7-D0)(7)		
Number of Clock(1-2-2)	8	4	4	4	4	4	4	4	4
Fast Read Dual I/O	BBh	A23-A16(6)	A15-A8(6)	A7-A0(6)	Dummy(11)	(D7-D0)(7)			
Number of Clock(1-1-4)	8	8	8	8	2	2	2	2	2
Quad Input Page Program	32h	A23-A16	A15-A8	A7-A0	(D7-D0)(9)	(D7-D0)(3)	…		
Fast Read Quad Output	6Bh	A23-A16	A15-A8	A7-A0	Dummy	Dummy	Dummy	Dummy	(D7-D0)(10)
Number of Clock(1-4-4)	8	2(8)	2(8)	2(8)	2	2	2	2	2
Fast Read Quad I/O	EBh	A23-A16	A15-A8	A7-A0	Dummy(11)	Dummy	Dummy	(D7-D0)	
Word Read Quad I/O	E7h	A23-A16	A15-A8	A7-A0	Dummy(11)	Dummy	(D7-D0)		
Set Burst with Wrap	77h	Dummy	Dummy	Dummy	W8-W0				

Notes:

1. Data bytes are shifted with Most Significant Bit first. Byte fields with data in parenthesis "( )" indicate data output from the device on either 1, 2 or 4 IO pins.
2. The Status Register contents and Device ID will repeat continuously until /CS terminates the instruction.
3. At least one byte of data input is required for Page Program, Quad Page Program and Program Security Registers, up to 256 bytes of data input. If more than 256 bytes of data are sent to the device, the addressing will wrap to the beginning of the page and overwrite previously sentdata.
4. Write Status Register-1 (01h) can also be used to program Status Register-1&2, see section 9.2.5.
5. Security Register Address:

   Security Register 1: A23-16 = 00h; A15-8 = 10h; A7-0 = byte address

   Security Register 2: A23-16 = 00h; A15-8 = 20h; A7-0 = byte address

   Security Register 3: A23-16 = 00h; A15-8 = 30h; A7-0 = byte address
6. Dual SPI address input format:

   IO0 = A22, A20, A18, A16, A14, A12, A10, A8 A6, A4, A2, A0, M6, M4, M2, M0

   IO1 = A23, A21, A19, A17, A15, A13, A11, A9 A7, A5, A3, A1, M7, M5, M3, M1
7. Dual SPI data output format:

   IO0 = (D6, D4, D2, D0)

   IO1 = (D7, D5, D3, D1)

8. Quad SPI address input format:
   IO0 = A20, A16, A12, A8, A4, A0, M4, M0
   IO1 = A21, A17, A13, A9, A5, A1, M5, M1
   IO2 = A22, A18, A14, A10, A6, A2, M6, M2
   IO3 = A23, A19, A15, A11, A7, A3, M7, M3
9. Quad SPI data input/output format:
   IO0 = (D4, D0, …..)
   IO1 = (D5, D1, …..)
   IO2 = (D6, D2, …..)
   IO3 = (D7, D3, …..)
10. Fast Read Quad I/O data output format:
   IO0 = (x, x, x, x, D4, D0, D4, D0)
   IO1 = (x, x, x, x, D5, D1, D5, D1)
   IO2 = (x, x, x, x, D6, D2, D6, D2)
   IO3 = (x, x, x, x, D7, D3, D7, D3)
11. The first dummy is M7-M0 should be set to Fxh

Set Burst with Wrap input format:
   IO0 = x, x, x, x, x, x, W4, x
   IO1 = x, x, x, x, x, x, W5, x
   IO2 = x, x, x, x, x, x, W6, x
   IO3 = x, x, x, x, x, x, x, x

9.2. Instruction Descriptions

9.2.1. Write Enable (06h)

The Write Enable instruction (Figure 4) sets the Write Enable Latch (WEL) bit in the Status Register to a

1. The WEL bit must be set prior to every Page Program, Quad Page Program, Sector Erase, Block Erase, Chip Erase, Write Status Register and Erase/Program Security Registers instruction. The Write Enable instruction is entered by driving /CS low, shifting the instruction code “06h” into the Data Input (DI) pin on the rising edge of CLK, and then driving /CS high.

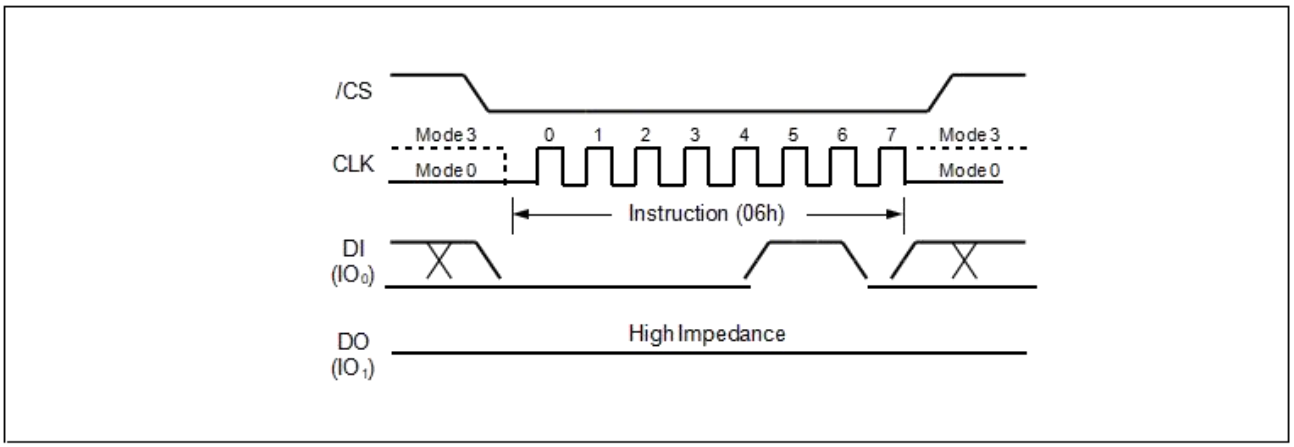

Figure 4. Write Enable Instruction for SPI Mode

9.2.2. Write Enable for Volatile Status Register (50h)

The non-volatile Status Register bits described in section 8.1 can also be written to as volatile bits. This gives more flexibility to change the system configuration and memory protection schemes quickly without waiting for the typical non-volatile bit write cycles or affecting the endurance of the Status Register non- volatile bits. To write the volatile values into the Status Register bits, the Write Enable for Volatile Status Register (50h) instruction must be issued prior to a Write Status Register (01h) instruction. Write Enable for Volatile Status Register instruction (Figure 5) will not set the Write Enable Latch (WEL) bit, it is only valid for the Write Status Register instruction to change the volatile Status Register bit values.

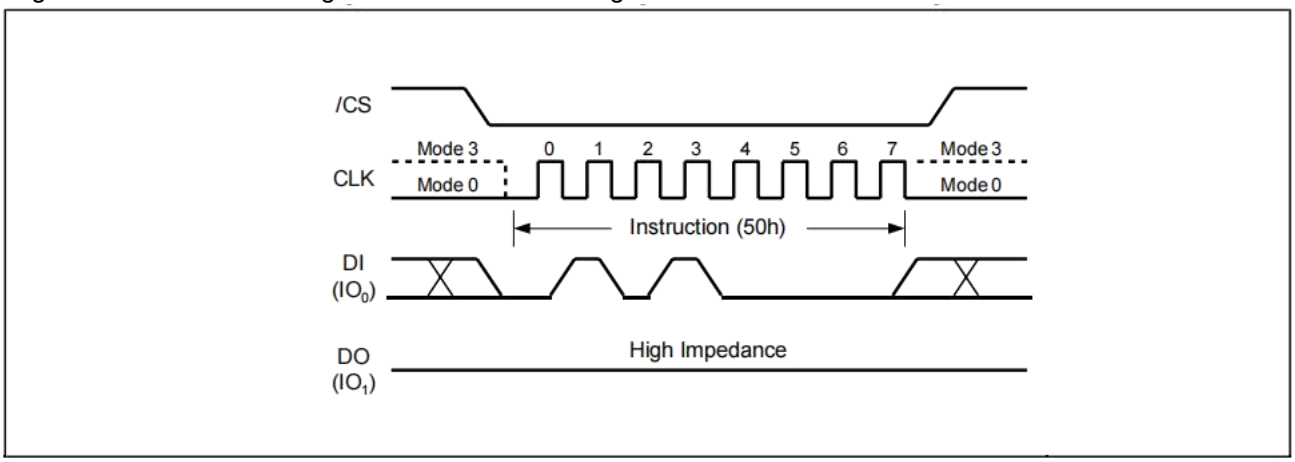

Figure 5. Write Enable for Volatile Status Register Instruction for SPI Mode

9.2.3.Write Disable (04h)

The Write Disable instruction (Figure 6) resets the Write Enable Latch (WEL) bit in the Status Register to a 0. The Write Disable instruction is entered by driving /CS low, shifting the instruction code “04h” into the DI pin and then driving /CS high. Note that the WEL bit is automatically reset after Power-up and upon completion of the Write Status Register, Erase/Program Security Registers, Page Program, Quad Page Program, Sector Erase, Block Erase, Chip Erase and Reset instructions.

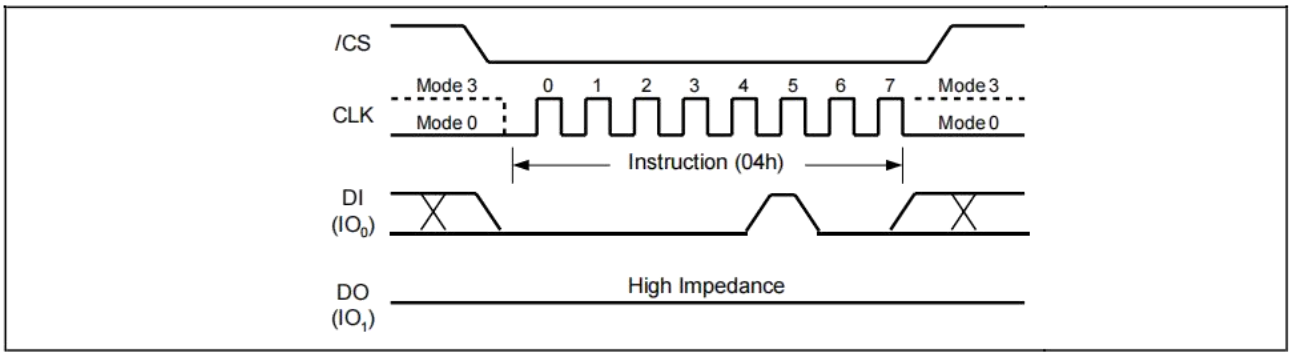

Figure 6. Write Disable Instruction for SPI Mode

9.2.4. Read Status Register-1 (05h), Status Register-2 (35h) & Status Register-3 (15h)

The Read Status Register instructions allow the 8-bit Status Registers to be read. The instruction isentered by driving /CS low and shifting the instruction code “05h” for Status Register-1, “35h” for StatusRegister-2 or “15h” for Status Register-3 into the DI pin on the rising edge of CLK. The status register bitsare then shifted out on the DO pin at the falling edge of CLK with most significant bit (MSB) first as shownin Figure 7. Refer to section 8.1 for Status Register descriptions.The Read Status Register instruction may be used at any time, even while a Program, Erase or WriteStatus Register cycle is in progress. This allows the BUSY status bit to be checked to determine when thecycle is complete and if the device can accept another instruction. The Status Register can be readcontinuously, as shown in Figure 7. The instruction is completed by driving /CS high.

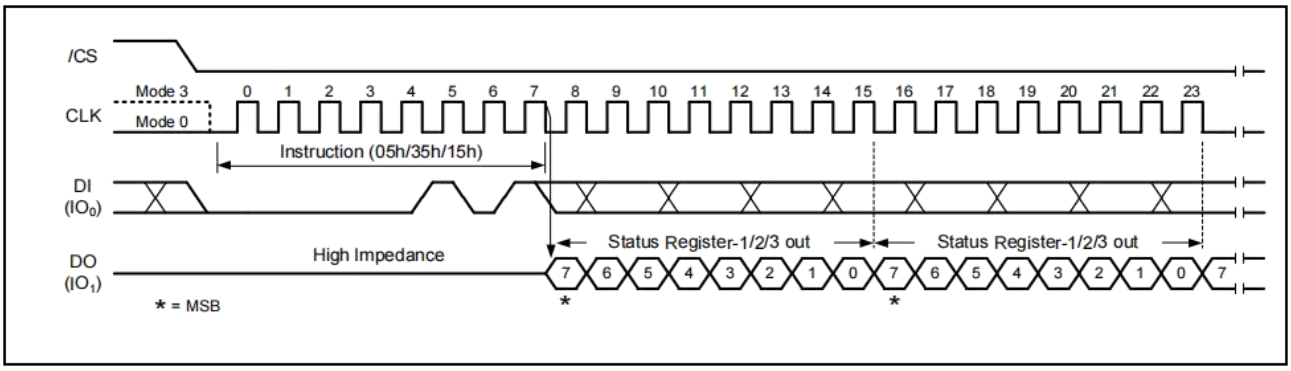

Figure 7 Read Status Register -1/2/3 Instruction (SPI Mode)

9.2.5. Write Status Register-1 (01h), Status Register-2 (31h) & Status Register-3 (11h)

The Write Status Register instruction allows the Status Registers to be written. The writable Status Register bits include: SEC, TB, BP[2:0] in Status Register-1; CMP, LB[3:1], QE, SRP0 in Status Register-2; DRV1, DRV0, WPS in Status Register-3. All other Status Register bit locations are read-only and will not be affected by the Write Status Register instruction. LB[3:1] are non-volatile OTP bits, once it is set to 1, it cannot be cleared to 0.

To write non-volatile Status Register bits, a standard Write Enable (06h) instruction must previously have been executed for the device to accept the Write Status Register instruction (Status Register bit WEL must equal 1). Once write enabled, the instruction is entered by driving /CS low, sending the instruction code “01h/31h/11h”, and then writing the status register data byte as illustrated in Figure 8a.

To write volatile Status Register bits, a Write Enable for Volatile Status Register (50h) instruction must have been executed prior to the Write Status Register instruction (Status Register bit WEL remains 0). However, SRP0 and LB[3:1] cannot be changed from “1” to “0” because of the OTP protection for these bits. Upon power off or the execution of a Software/Hardware Reset, the volatile Status Register bit values will be lost, and the non-volatile Status Register bit values will be restored.

During non-volatile Status Register write operation (06h combined with 01h/31h/11h), after /CS is driven high, the self-timed Write Status Register cycle will commence for a time duration of tW (See AC Characteristics). While the Write Status Register cycle is in progress, the Read Status Register instruction may still be accessed to check the status of the BUSY bit. The BUSY bit is a 1 during the Write Status Register cycle and a 0 when the cycle is finished and ready to accept other instructions again. After the Write Status Register cycle has finished, the Write Enable Latch (WEL) bit in the Status Register will be cleared to 0.

During volatile Status Register write operation (50h combined with 01h/31h/11h), after /CS is driven high, the Status Register bits will be refreshed to the new values within the time period of tSHSL2 (See AC Characteristics). BUSY bit will remain 0 during the Status Register bit refresh period.

Refer to section 8.1 for Status Register descriptions

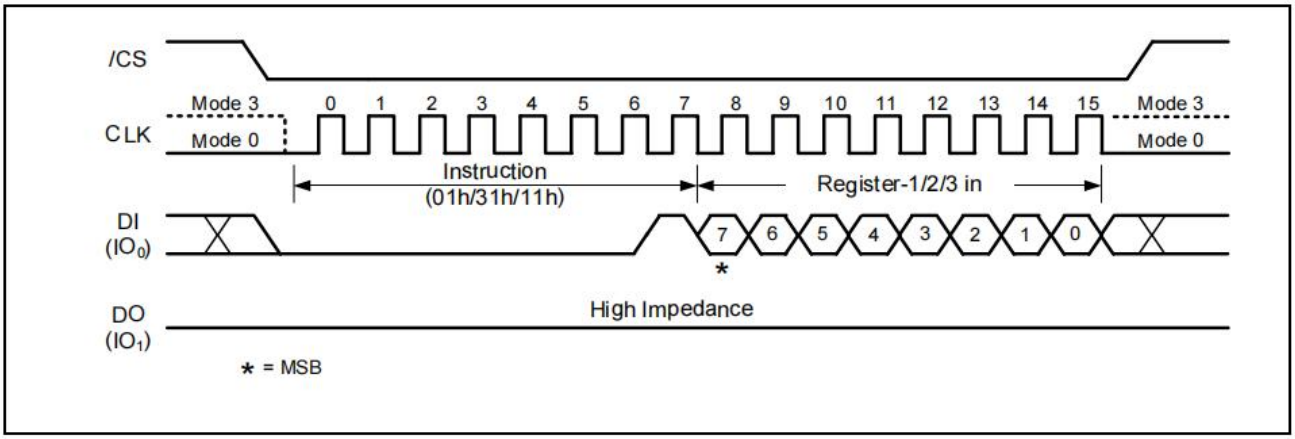

Figure 8a. Write Status Register-1/2/3 Instruction

Notes:

1. For non-volatile Status Register write operation, if any bits of the three Status Registers need to be write from "1" to "0", all non-volatile Status Register bits, including non-volatile OTP bits LB[3:0], should be written again by instructions 06h combined with 01h/31h/11h.

2. Before the three Status Registers being written again, software reset instructions (66h and 99h) combined with read Status Register instructions (05h/35h/15h) can be used to get the current non-volatile bits of the three Status Registers.

9.2.6. Read Data (03h)

The Read Data instruction allows one or more data bytes to be sequentially read from the memory. The instruction is initiated by driving the /CS pin low and then shifting the instruction code “03h” followed by a 24-bit address (A23-A0) into the DI pin. The code and address bits are latched on the rising edge of the CLK pin. After the address is received, the data byte of the addressed memory location will be shifted out on the DO pin at the falling edge of CLK with most significant bit (MSB) first. The address is automatically incremented to the next higher address after each byte of data is shifted out allowing for a continuous stream of data. This means that the entire memory can be accessed with a single instruction as long as the clock continues. The instruction is completed by driving /CS high.

The Read Data instruction sequence is shown in Figure 9. If a Read Data instruction is issued while an Erase, Program or Write cycle is in process (BUSY=1) the instruction is ignored and will not have any effects on the current cycle. The Read Data instruction allows clock rates from D.C. to a maximum of fR (see AC Electrical Characteristics).

The Read Data (03h) instruction is only supported in Standard SPI mode.

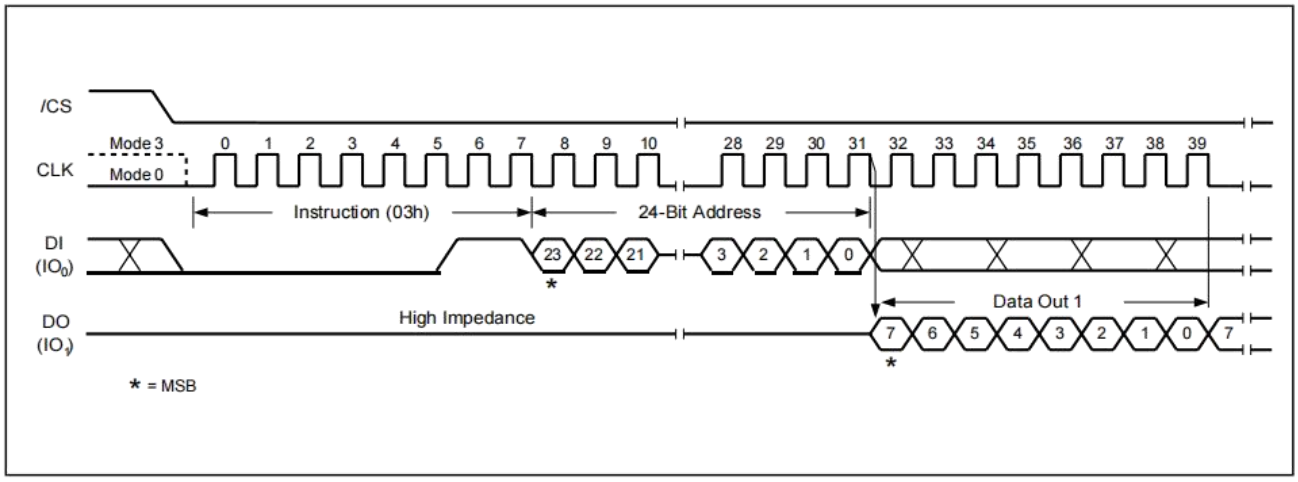

Figure 9. Read Data Instruction

9.2.7. Fast Read (0Bh)

The Fast Read instruction is similar to the Read Data instruction except that it can operate at the highest possible frequency of FR (see AC Electrical Characteristics). This is accomplished by adding eight “dummy” clocks after the 24-bit address as shown in Figure 10. The dummy clocks allow the devices internal circuits additional time for setting up the initial address. During the dummy clocks the data value on the DO pin is a “don’t care”.

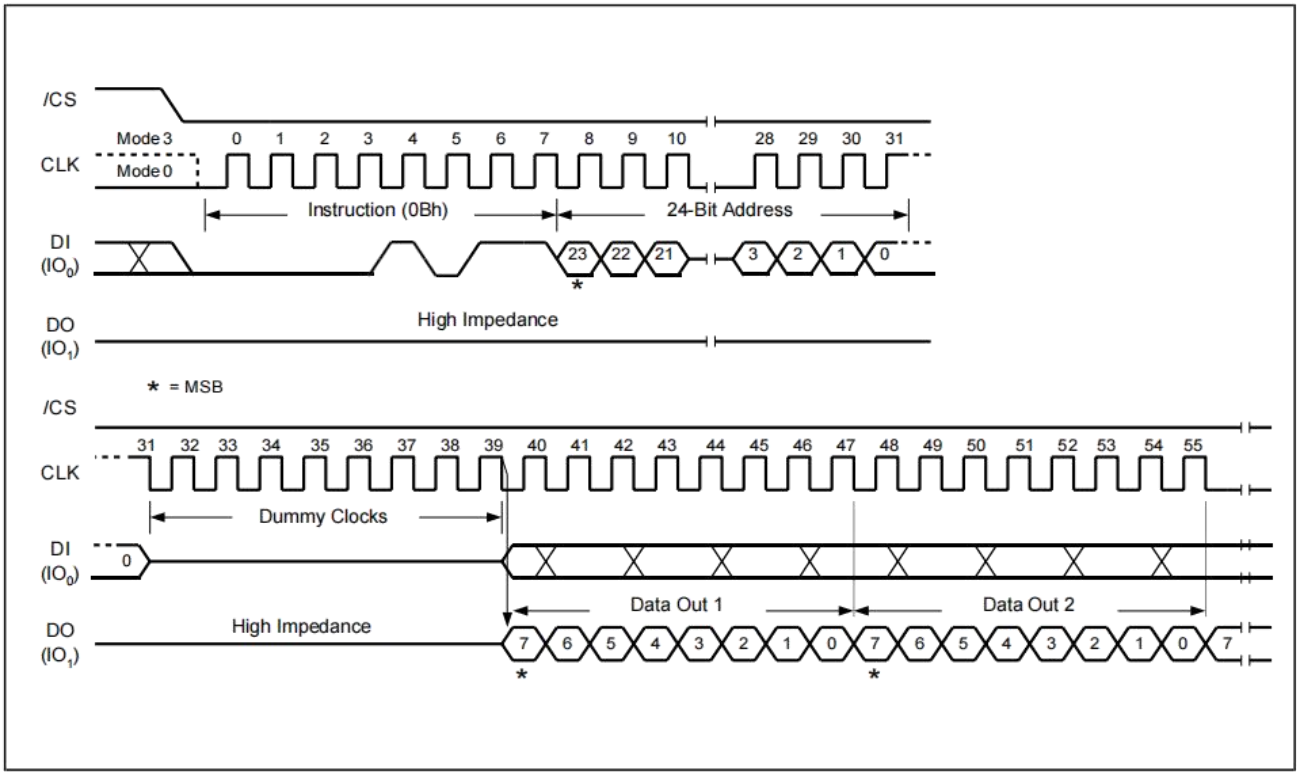

Figure 10a. Fast Read Instruction

9.2.8. Fast Read Dual Output (3Bh)

The Fast Read Dual Output (3Bh) instruction is similar to the standard Fast Read (0Bh) instruction except that data is output on two pins; IO0 and IO1. This allows data to be transferred at twice the rate of standard SPI devices. The Fast Read Dual Output instruction is ideal for quickly downloading code from Flash to RAM upon power-up or for applications that cache code-segments to RAM for execution.

Similar to the Fast Read instruction, the Fast Read Dual Output instruction can operate at the highest possible frequency of FR (see AC Electrical Characteristics). This is accomplished by adding eight “dummy” clocks after the 24-bit address as shown in Figure 11. The dummy clocks allow the device's internal circuits additional time for setting up the initial address. The input data during the dummy clocks is “don’t care”. However, the IO0 pin should be high-impedance prior to the falling edge of the first data out clock.

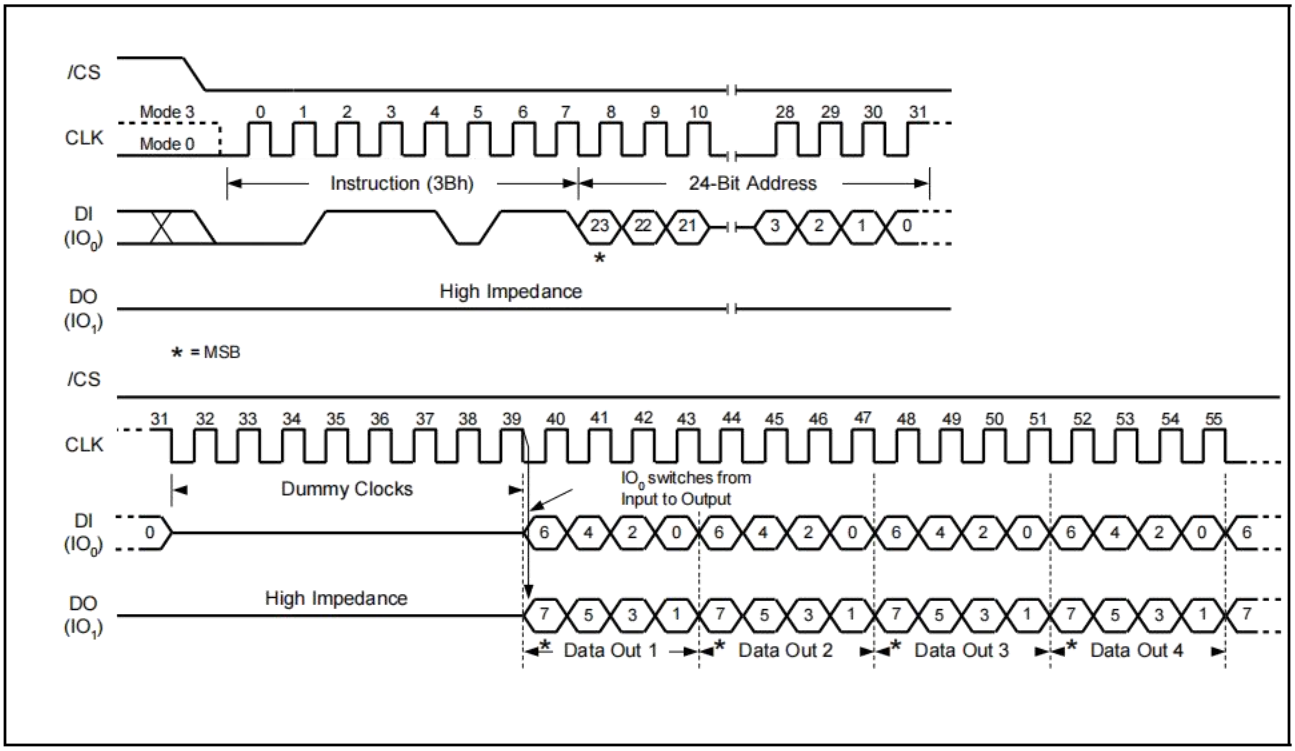

Figure 11. Fast Read Dual Output Instruction (SPI Mode only)

9.2.9. Fast Read Quad Output (6Bh)

The Fast Read Quad Output (6Bh) instruction is similar to the Fast Read Dual Output (3Bh) instruction except that data is output on four pins, IO0, IO1, IO2, and IO3. The Quad Enable (QE) bit in Status Register-2 must be set to 1 before the device will accept the Fast Read Quad Output Instruction. The Fast Read Quad Output Instruction allows data to be transferred at four times the rate of standard SPI devices.

The Fast Read Quad Output instruction can operate at the highest possible frequency of FR (see AC Electrical Characteristics). This is accomplished by adding eight “dummy” clocks after the 24-bit address as shown in Figure 12. The dummy clocks allow the device's internal circuits additional time for setting up the initial address. The input data during the dummy clocks is “don’t care”. However, the IO pins should be high-impedance prior to the falling edge of the first data out clock.

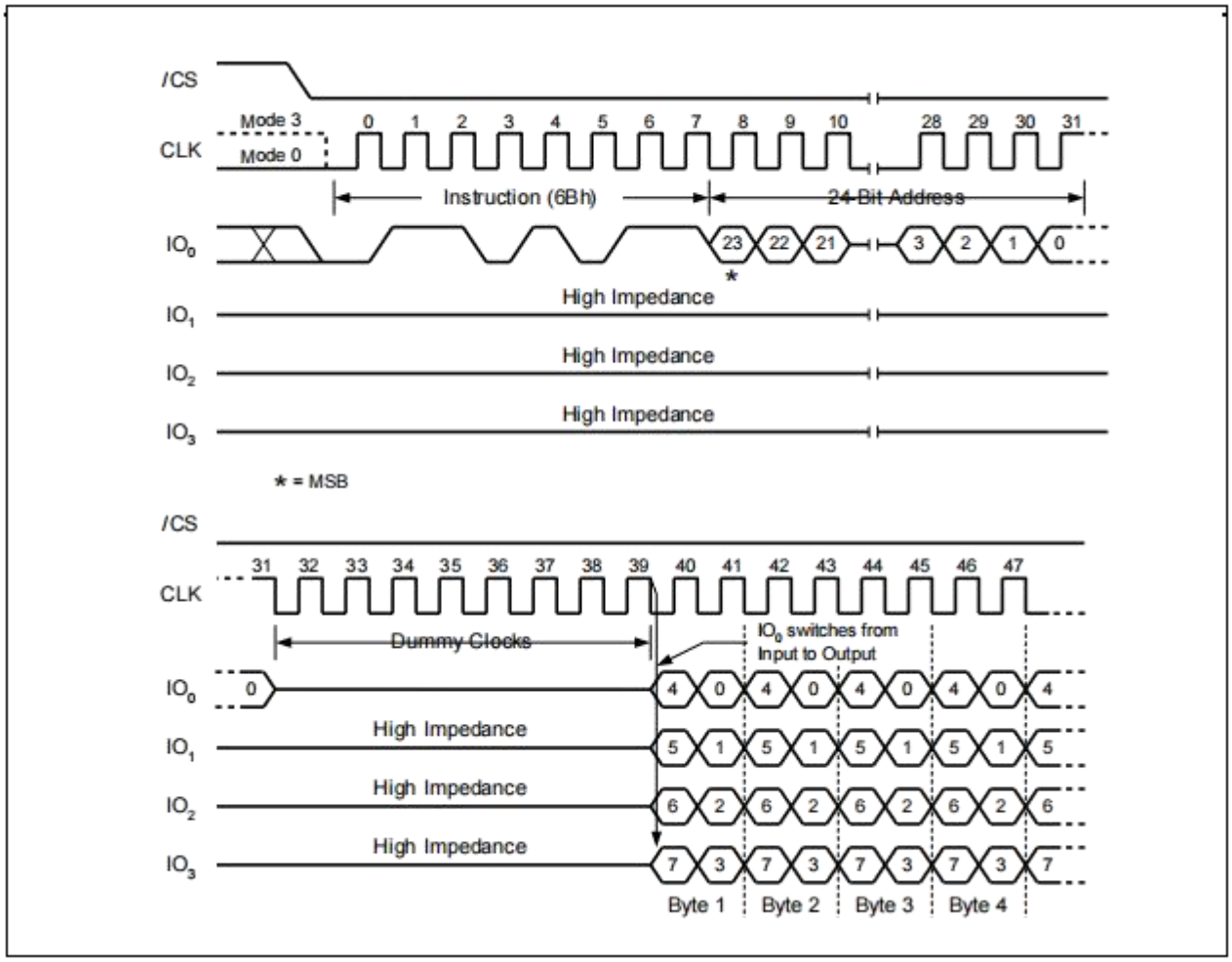

Figure 12. Fast Read Quad Output Instruction (SPI Mode only)

9.2.10. Fast Read Dual I/O (BBh)

The Fast Read Dual I/O (BBh) instruction allows for improved random access while maintaining two IO pins, IO0 and IO1. It is similar to the Fast Read Dual Output (3Bh) instruction but with the capability to input the Address bits (A23-0) two bits per clock. This reduced instruction overhead may allow for code execution (XIP) directly from the Dual SPI in some applications.

Fast Read Dual I/O with "Continuous Read Mode"

The Fast Read Dual I/O instruction can further reduce instruction overhead through setting the "Continuous Read Mode" bits (M7-0) after the input Address bits (A23-0), as shown in Figure 13a. The upper nibble of the (M7-4) controls the length of the next Fast Read Dual I/O instruction through the inclusion or exclusion of the first byte instruction code. The lower nibble bits of the (M3-0) are don't care ("x"). However, the IO pins should be high-impedance prior to the falling edge of the first data out clock.

If the "Continuous Read Mode" bits M5-4 = (1,0), then the next Fast Read Dual I/O instruction (after /CS israised and then lowered) does not require the BBh instruction code, as shown in Figure 13b. This reduces the instruction sequence by eight clocks and allows the Read address to be immediately entered after /CS is asserted low. If the "Continuous Read Mode" bits M5-4 do not equal to (1,0), the next instruction (after/CS is raised and then lowered) requires the first byte instruction code, thus returning to normal operation. It is recommended to input FFFFh on IO0 for the next instruction (16 clocks), to ensure M4 = 1 and return the device to normal operation.

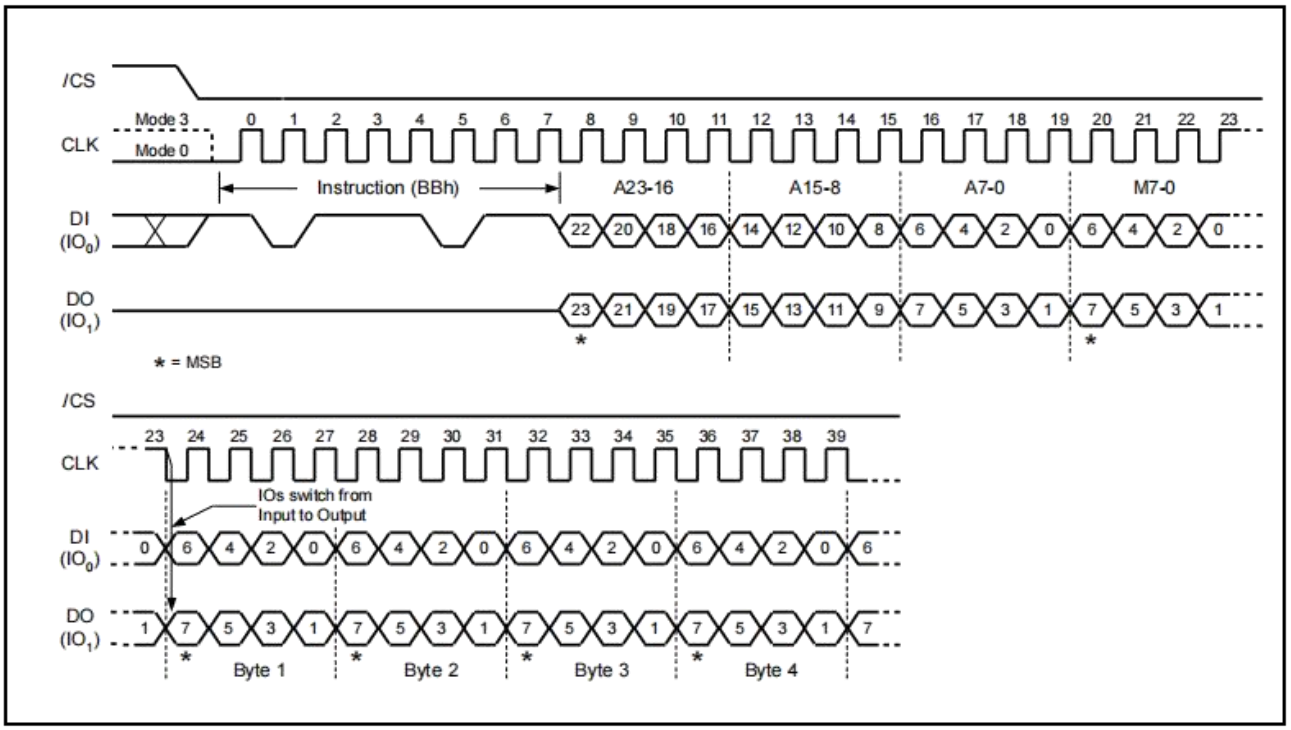

Figure 13a. Fast Read Dual I/O Instruction (Initial instruction or previous M5-4 ≠10, SPI Mode only)

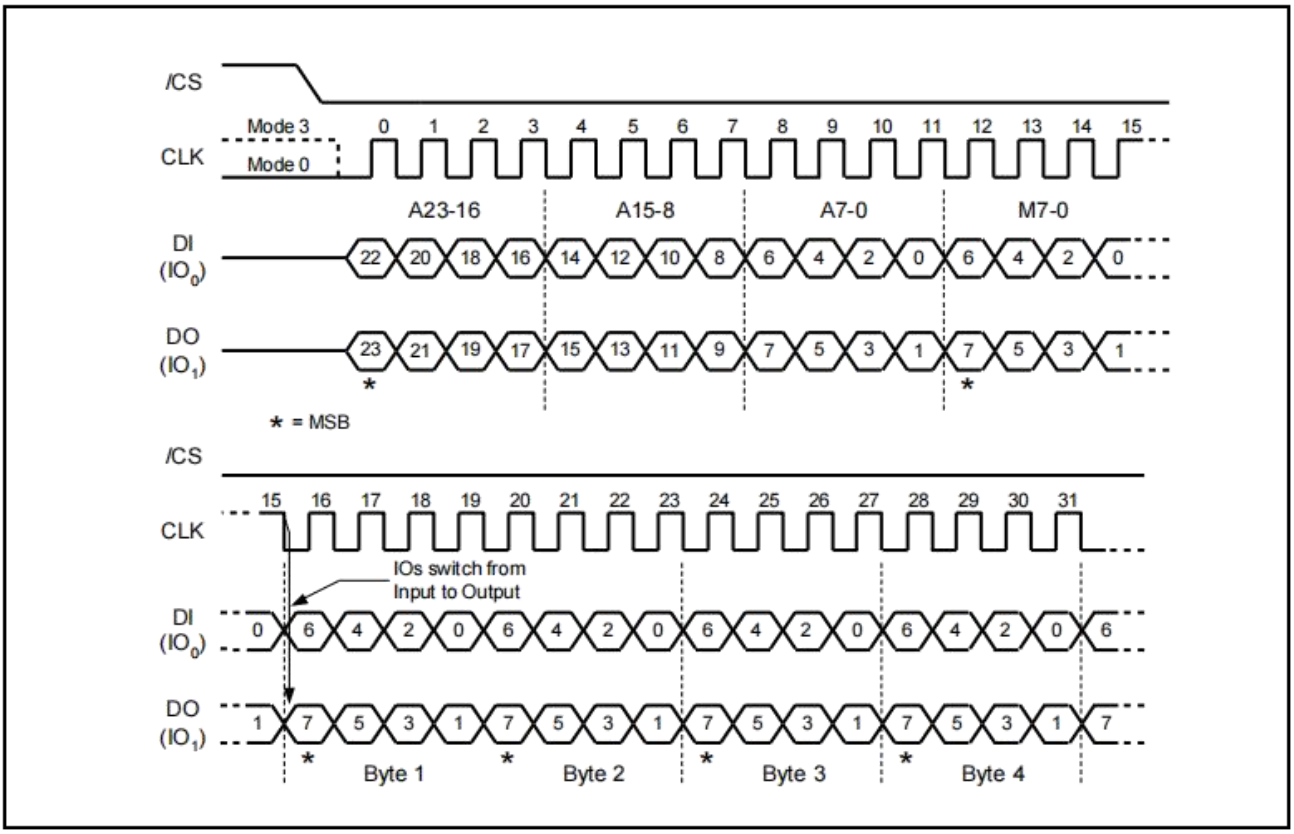

Figure 13b. Fast Read Dual I/O Instruction (Previous instruction set M5-4 = 10, SPI Mode only)

9.2.11. Fast Read Quad I/O (EBh)

The Fast Read Quad I/O (EBh) instruction is similar to the Fast Read Dual I/O (BBh) instruction except that address and data bits are input and output through four pins IO0, IO1, IO2 and IO3 and four Dummy clocks are required in SPI mode prior to the data output. The Quad I/O dramatically reduces instructionoverhead allowing faster random access for code execution (XIP) directly from the Quad SPI. The Quad Enable bit (QE) of Status Register-2 must be set to enable the Fast Read Quad I/O Instruction.

Fast Read Quad I/O with "Continuous Read Mode

The Fast Read Quad I/O instruction can further reduce instruction overhead through setting the "Continuous Read Mode" bits (M7-0) after the input Address bits (A23-0), as shown in Figure 14a. The upper nibble of the (M7-4) controls the length of the next Fast Read Quad I/O instruction through the inclusion or exclusion of the first byte instruction code. The lower nibble bits of the (M3-0) are don't care("x"). However, the IO pins should be high-impedance prior to the falling edge of the first data out clock.

If the "Continuous Read Mode" bits M5-4 = (1,0), then the next Fast Read Quad I/O instruction (after /CS is raised and then lowered) does not require the EBh instruction code, as shown in Figure 15b. This reduces the instruction sequence by eight clocks and allows the Read address to be immediately entered after /CS is asserted low. If the "Continuous Read Mode" bits M5-4 do not equal to (1,0), the next instruction (after /CS is raised and then lowered) requires the first byte instruction code, thus returning to normal operation. It is recommended to input FFh on IO0 for the next instruction (8 clocks), to ensure M4 = 1 and return the device to normal operation.

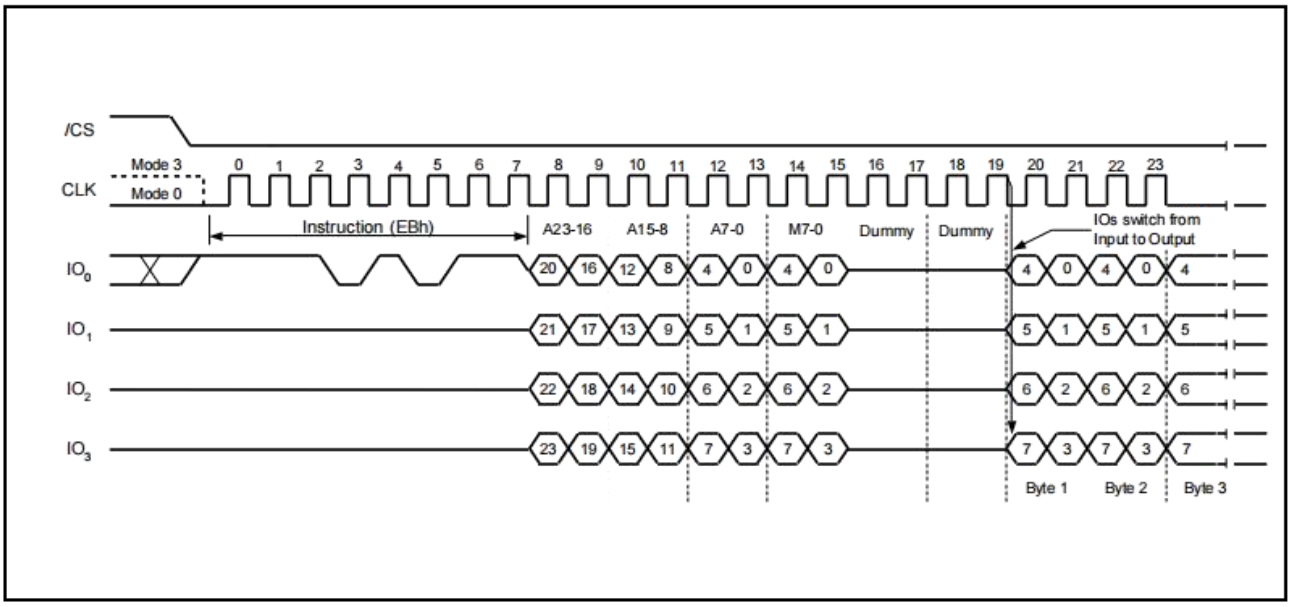

Figure 14a. Fast Read Quad I/O Instruction (Initial instruction or previous M5-4≠10, SPI Mode)

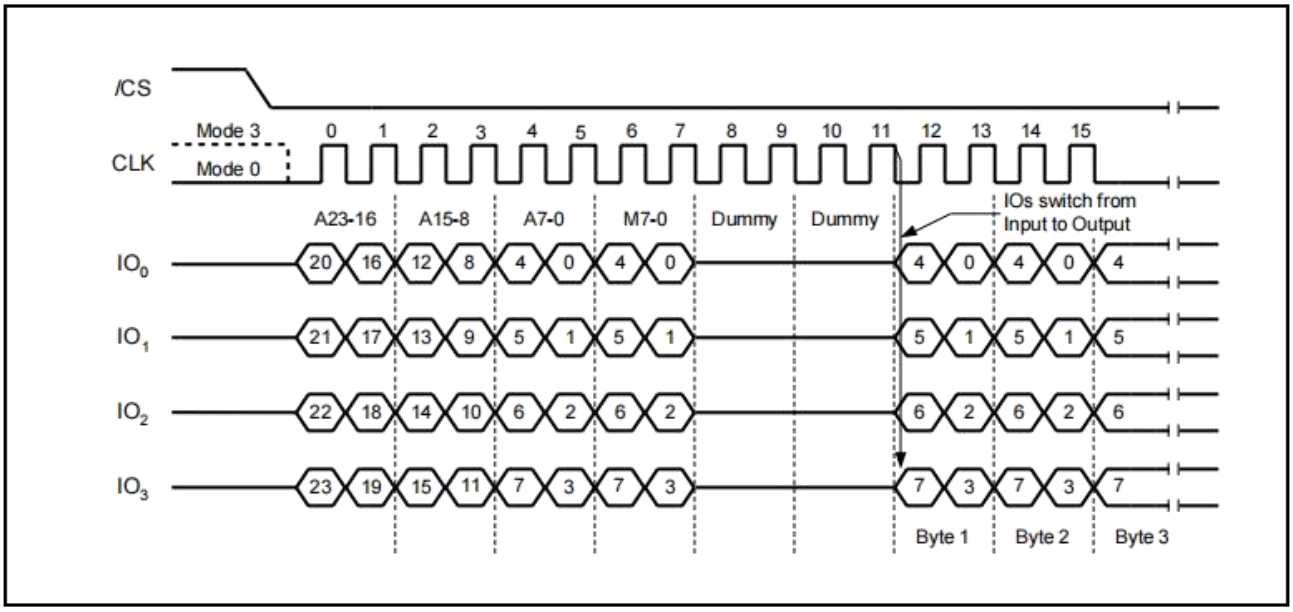

Figure 15b. Fast Read Quad I/O Instruction (Previous instruction set M5-4 = 10, SPI Mode)

Fast Read Quad I/O with "8/16/32/64-Byte Wrap Around" in Standard SPI mode

The Fast Read Quad I/O instruction can also be used to access a specific portion within a page by issuing a "Set Burst with Wrap" (77h) command prior to EBh. The "Set Burst with Wrap" (77h) command can either enable or disable the "Wrap Around" feature for the following EBh commands. When "Wrap Around" is enabled, the data being accessed can be limited to either an 8, 16, 32 or 64-byte section of a 256-byte page. The output data starts at the initial address specified in the instruction, once it reaches the ending boundary of the 8/16/32/64-byte section, the output will wrap around to the beginning boundary automatically until /CS is pulled high to terminate the command.

The Burst with Wrap feature allows applications that use cache to quickly fetch a critical address and then fill the cache afterwards within a fixed length (8/16/32/64-byte) of data without issuing multiple read commands.

The “Set Burst with Wrap” instruction allows three “Wrap Bits”, W6-4 to be set. The W4 bit is used to enable or disable the “Wrap Around” operation while W6-5 are used to specify the length of the wrap around section within a page.

9.2.12. Word Read Quad I/O (E7h)

The Word Read Quad I/O (E7h) instruction is similar to the Fast Read Quad I/O (EBh) instruction except that the lowest Address bit (A0) must equal 0 and only two Dummy clocks are required prior to the data output. The Quad I/O dramatically reduces instruction overhead allowing faster random access for code execution (XIP) directly from the Quad SPI. The Quad Enable bit (QE) of Status Register-2 must be set to enable the Word Read Quad I/OInstruction.

Word Read Quad I/O with “Continuous Read Mode”

The Word Read Quad I/O instruction can further reduce instruction overhead through setting the “Continuous Read Mode” bits (M7-0) after the input Address bits (A23-0), as shown in Figure 16a. The upper nibble ofthe(M7-4)controls the length of the next Fast Read Quad I/O instruction through the inclusion or exclusion of the first byte instructioncode. The lower nibble bits of the (M3-0) are don’t care (“x”). However, the IO pins should be high-impedance prior to the falling edge of the first data out clock.

If the “Continuous Read Mode” bits M5-4 = (1,0), then the next Fast Read Quad I/O instruction (after /CS is raised and then lowered) does not require the E7h instruction code, as shown in Figure 16b. This reduces the instruction sequence by eight clocks and allows the Read address to be immediately entered after /CS is asserted low. If the “Continuous Read Mode” bits M5-4 do not equal to (1,0), the next instruction (after /CS is raised and then lowered) requires the first byte instruction code, thus returning to normal operation. It is recommended to input FFh on IO0 for the next instruction (8 clocks), to ensure M4 = 1 and return the device to normal operation.

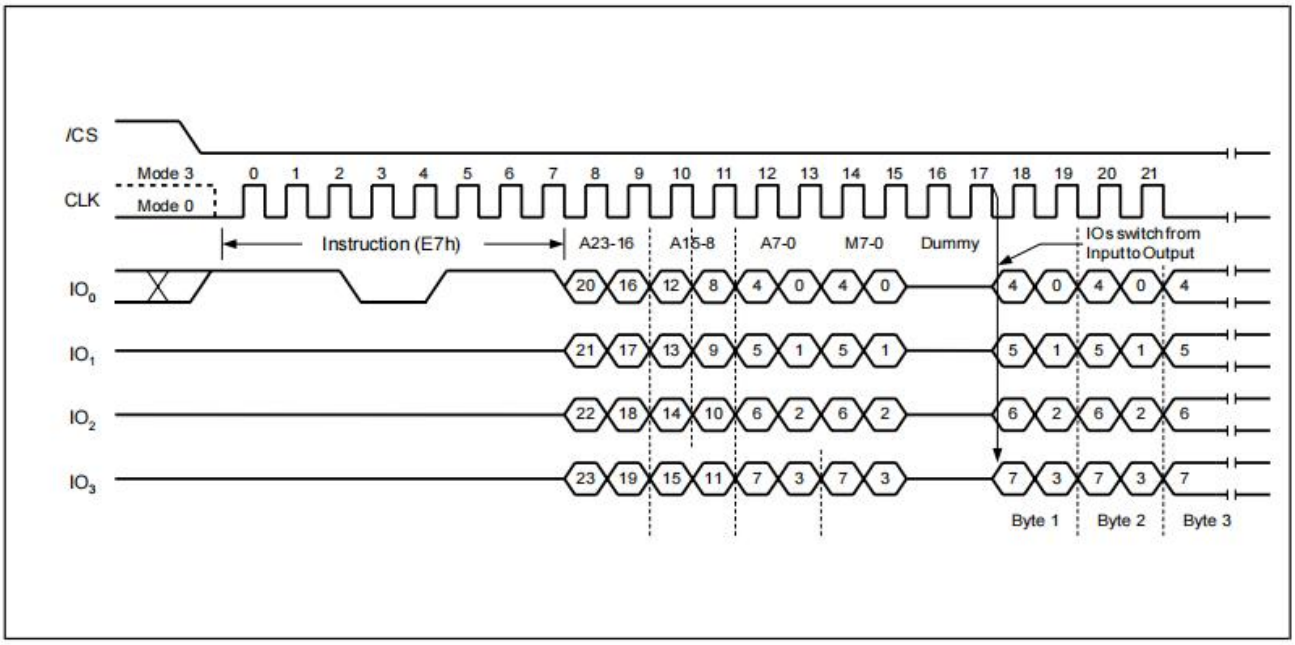

Figure 16a. Word Read Quad I/O Instruction (Initial instruction or previous M5-4 ≠10, SPI Mode only)

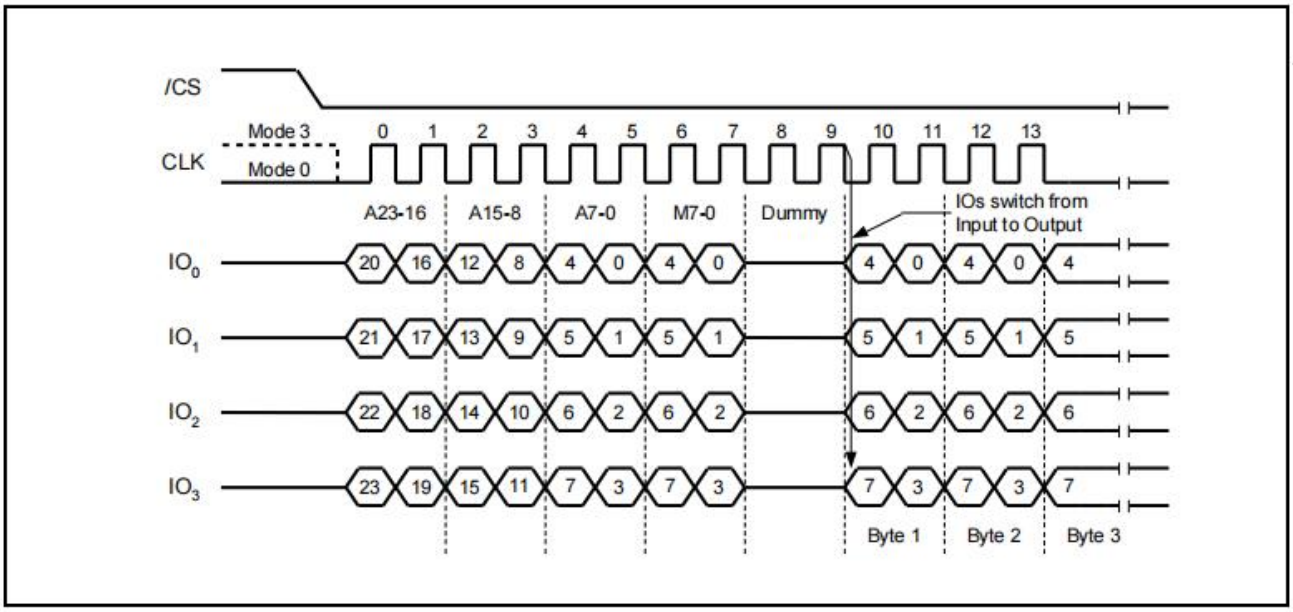

Figure 16b. Word Read Quad I/O Instruction (Previous instruction set M5-4 = 10, SPI Mode only)

Word Read Quad I/O with "8/16/32/64-Byte Wrap Around" in Standard SPI mode

The Word Read Quad I/O instruction can also be used to access a specific portion within a page by issuing a "Set Burst with Wrap" (77h) command prior to E7h. The "Set Burst with Wrap" (77h) command can either enable or disable the "Wrap Around" feature for the following E7h commands. When "Wrap Around" is enabled, the data being accessed can be limited to either an 8, 16, 32 or 64- byte section of a 256-byte page. The output data starts at the initial address specified in the instruction, once it reaches the ending boundary of the 8/16/32/64-byte section, the output will wrap around to the beginning boundary automatically until /CS is pulled high to terminate the command.

The Burst with Wrap feature allows applications that use cache to quickly fetch a critical address and then fill the cache afterwards within a fixed length (8/16/32/64-byte) of data without issuing multiple read commands.

The "Set Burst with Wrap" instruction allows three "Wrap Bits", W6-4 to be set. The W4 bit is used to enable or disable the "Wrap Around" operation while W6-5 are used to specify the length of the wrap around section within a page. See 9.2.24 for detail descriptions.

9.2.13. Set Burst with Wrap (77h)

In Standard SPI mode, the Set Burst with Wrap (77h) instruction is used in conjunction with “Fast Read Quad I/O” instruction to access a fixed length of 8/16/32/64-byte section within a 256-byte page. Certain applications can benefit from this feature and improve the overall system code execution performance.

Similar to a Quad I/O instruction, the Set Burst with Wrap instruction is initiated by driving the /CS pin low and then shifting the instruction code “77h” followed by 24 dummy bits and 8 “Wrap Bits”, W7-0. The instruction sequence is shown in Figure 17. Wrap bit W7 and the lower nibble W3-0 are not used.

W6, W5	W4 = 0		W4 =1 (DEFAULT)	
	Wrap Around	Wrap Length	Wrap Around	Wrap Length
0 0	Yes	8-byte	No	N/A
0 1	Yes	16-byte	No	N/A
1 0	Yes	32-byte	No	N/A
1 1	Yes	64-byte	No	N/A

Once W6-4 is set by a Set Burst with Wrap instruction, all the following “Fast Read Quad I/O” instruction will use the W6-4 setting to access the 8/16/32/64-byte section within any page. To exit the “Wrap Around” function and return to normal read operation, another Set Burst with Wrap instruction should be issued to set W4 = 1. The default value of W4upon power on or after a software/hardware reset is 1.

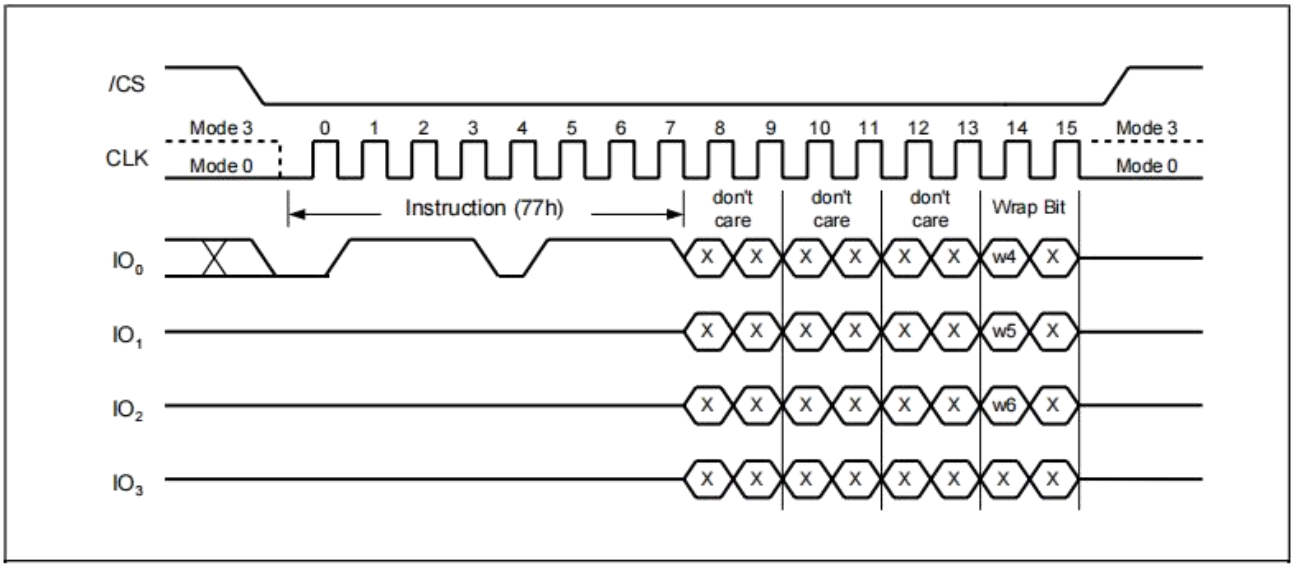

Figure 17. Set Burst with Wrap Instruction

9.2.14. Page Program (02h)

The Page Program instruction allows from one byte to 256 bytes (a page) of data to be programmed at previously erased (FFh) memory locations. A Write Enable instruction must be executed before the device will accept the Page Program Instruction (Status Register bit WEL= 1). The instruction is initiated by driving the /CS pin low then shifting the instruction code “02h” followed by a 24-bit address (A23-A0) and at least one data byte, into the DI pin. The /CS pin must be held low for the entire length of the instruction while data is being sent to the device. The Page Program instruction sequence is shown in Figure 18.

If an entire 256 byte page is to be programmed, the last address byte (the 8 least significant address bits) should be set to 0. If the last address byte is not zero, and the number of clocks exceeds the remaining page length, the addressing will wrap to the beginning of the page. In some cases, less than 256 bytes (a partial page) can be programmed without having any effect on other bytes within the same page. One condition to perform a partial page program is that the number of clocks cannot exceed the remaining page length. If more than 256 bytes are sent to the device the addressing will wrap to the beginning of the page and overwrite previously sent data.

As with the write and erase instructions, the /CS pin must be driven high after the eighth bit of the last byte has been latched. If this is not done the Page Program instruction will not be executed. After /CS is driven high, the self-timed Page Program instruction will commence for a time duration of tpp (See AC Characteristics). While the Page Program cycle is in progress, the Read Status Register instruction may still be accessed for checking the status of the BUSY bit. The BUSY bit is a 1 during the Page Program cycle and becomes a 0 when the cycle is finished and the device is ready to accept other instructions again. After the Page Program cycle has finished the Write Enable Latch (WEL) bit in the Status Register is cleared to 0. The Page Program instruction will not be executed if the addressed page is protected by the Block Protect (CMP, SEC, TB, BP2, BP1, and BP0) bits or the Individual Block/SectorLocks.

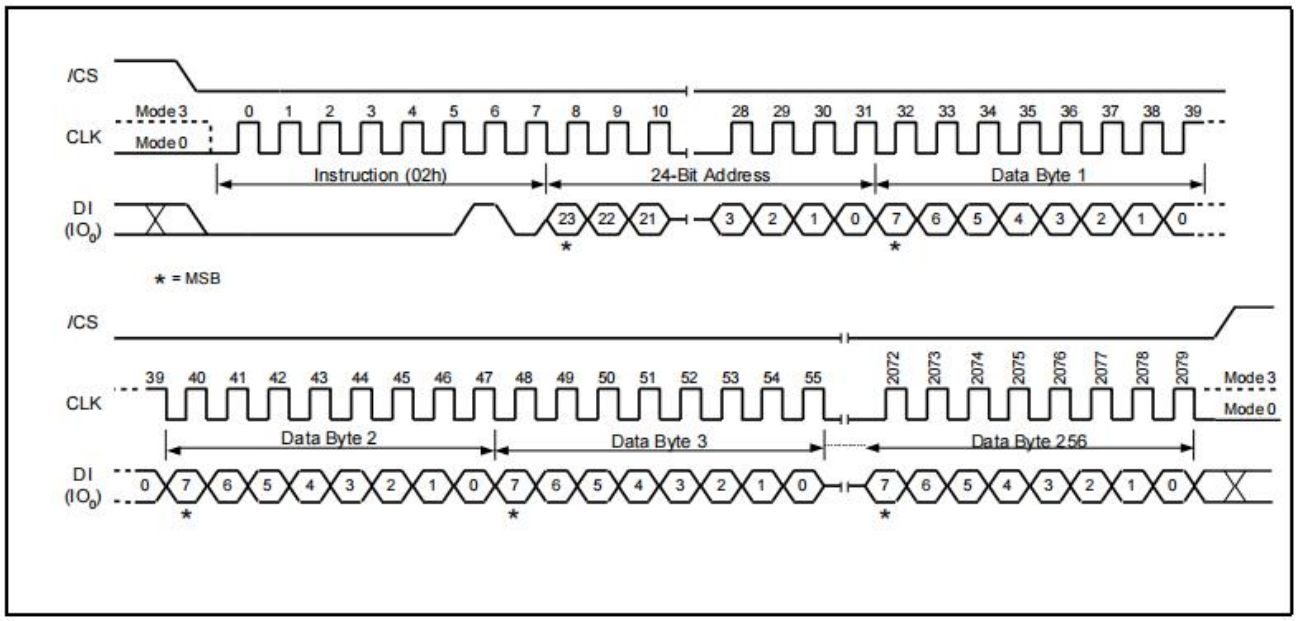

Figure 18. Page Program Instruction

9.2.15. Quad Input Page Program (32h)

The Quad Page Program instruction allows up to 256 bytes of data to be programmed at previously erased (FFh) memory locations using four pins: IO0, IO1, IO2, and IO3. The Quad Page Program can improve performance for PROM Programmer and applications that have slow clock speeds <5MHz. Systems with faster clock speed will not realize much benefit for the Quad Page Program instruction since the inherent page program time is much greater than the time it take to clock-in the data.

To use Quad Page Program the Quad Enable (QE) bit in Status Register-2 must be set to 1. A Write Enable instruction must be executed before the device will accept the Quad Page Program instruction (Status Register-1, WEL=1). The instruction is initiated by driving the /CS pin low then shifting the instruction code “32h” followed by a 24-bit address (A23-A0) and at least one data byte, into the IO pins. The /CS pin must be held low for the entire length of the instruction while data is being sent to the device. All other functions of Quad Page Program are identical to standard Page Program. The Quad Page Program instruction sequence is shown in Figure 19.

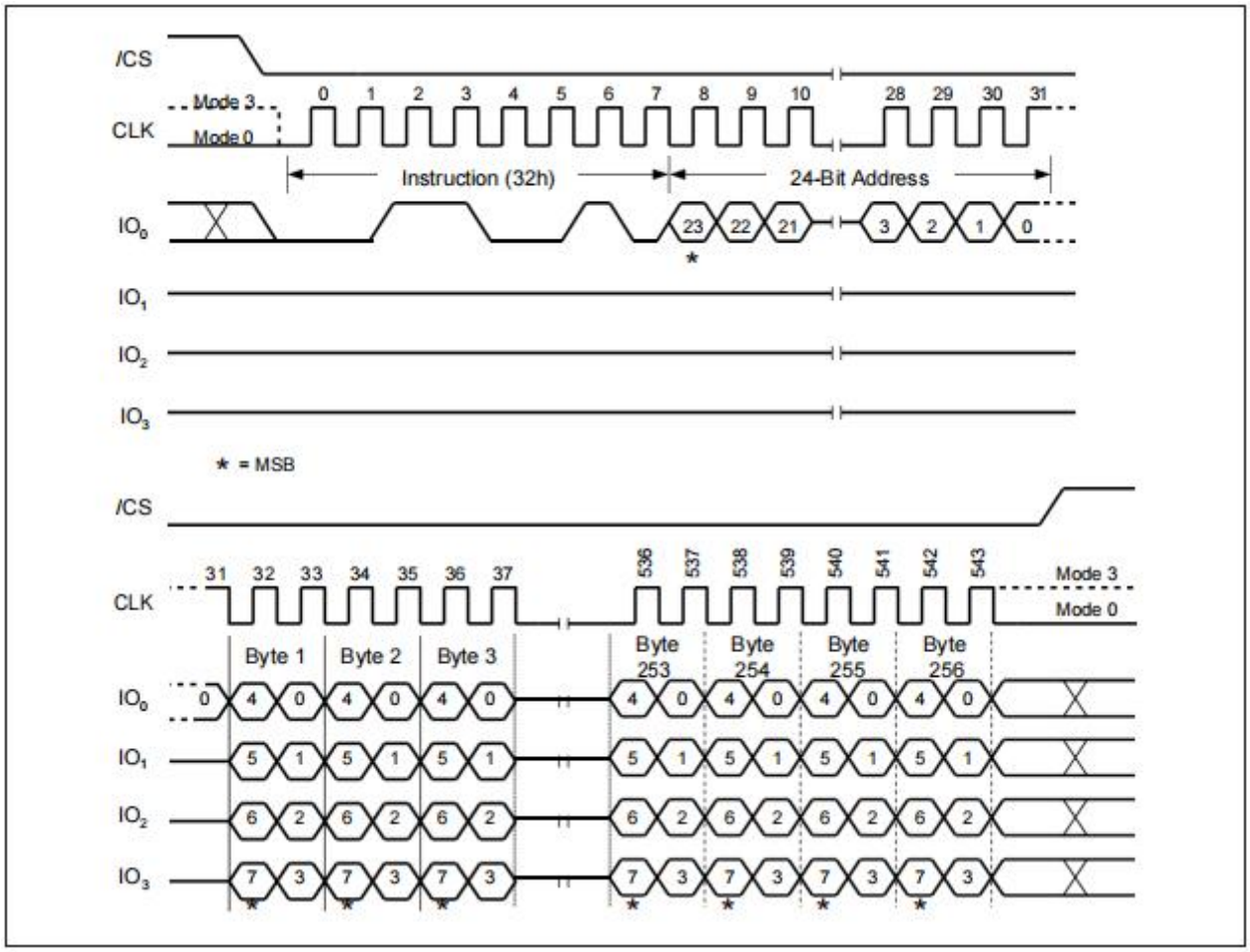

Figure 19. Quad Input Page Program Instruction

9.2.16. Sector Erase (20h)

The Sector Erase instruction sets all memory within a specified sector (4K-bytes) to the erased state of all 1s (FFh). A Write Enable instruction must be executed before the device will accept the Sector Erase Instruction (Status Register bit WEL must equal 1). The instruction is initiated by driving the /CS pin low and shifting the instruction code “20h” followed a 24-bit sector address (A23-A0). The Sector Erase instruction sequence is shown in Figure 20a.

The /CS pin must be driven high after the eighth bit of the last byte has been latched. If this is not done the Sector Erase instruction will not be executed. After /CS is driven high, the self-timed Sector Erase instruction will commence for a time duration of tSE (See AC Characteristics). While the Sector Erase cycle is in progress, the Read Status Register instruction may still be accessed for checking the status of the BUSY bit. The BUSY bit is a 1 during the Sector Erase cycle and becomes a 0 when the cycle is finished and the device is ready to accept other instructions again. After the Sector Erase cycle has finished the Write Enable Latch (WEL) bit in the Status Register is cleared to 0. The Sector Erase instruction will not be executed if the addressed page is protected by the Block Protect (CMP, SEC, TB, BP2, BP1, and BP0) bits or the Individual Block/Sector Locks.

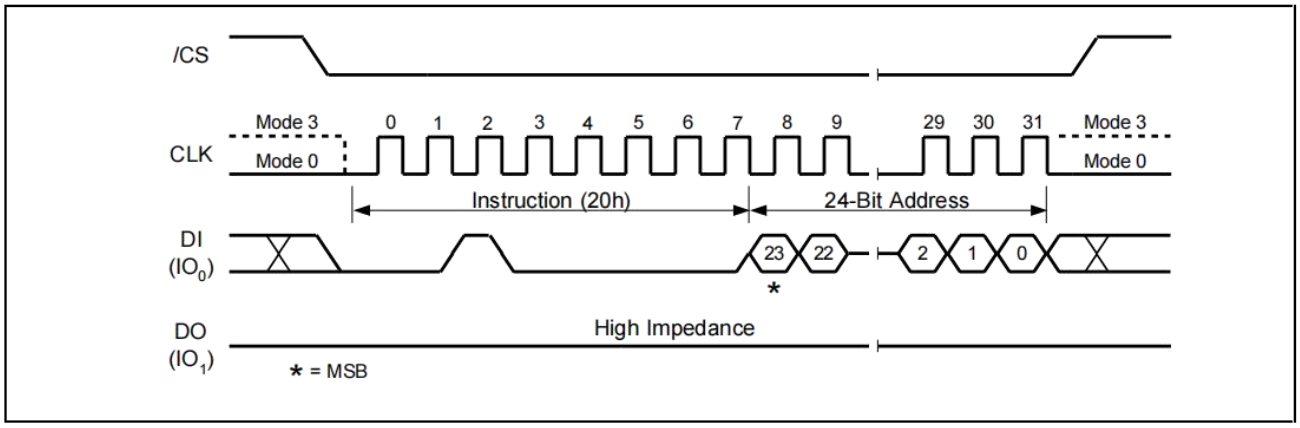

Figure 20a. Sector Erase Instruction

9.2.17. 32KB Block Erase (52h)

The Block Erase instruction sets all memory within a specified block (32K-bytes) to the erased state of all 1s (FFh). A Write Enable instruction must be executed before the device will accept the Block Erase Instruction (Status Register bit WEL must equal 1). The instruction is initiated by driving the /CS pin low and shifting the instruction code “52h” followed a 24-bit block address (A23-A0). The Block Erase instruction sequence is shown in Figure 21.

The /CS pin must be driven high after the eighth bit of the last byte has been latched. If this is not done the Block Erase instruction will not be executed. After /CS is driven high, the self-timed Block Erase instruction will commence for a time duration of tBE1 (See AC Characteristics). While the Block Erase cycle is in progress, the Read Status Register instruction may still be accessed for checking the status of the BUSY bit. The BUSY bit is a 1 during the Block Erase cycle and becomes a 0 when the cycle is finished and the device is ready to accept other instructions again. After the Block Erase cycle has finished the Write Enable Latch (WEL) bit in the Status Register is cleared to 0. The Block Erase instruction will not be executed if the addressed page is protected by the Block Protect (CMP, SEC, TB, BP2, BP1, and BP0) bits or the Individual Block/Sector Locks.

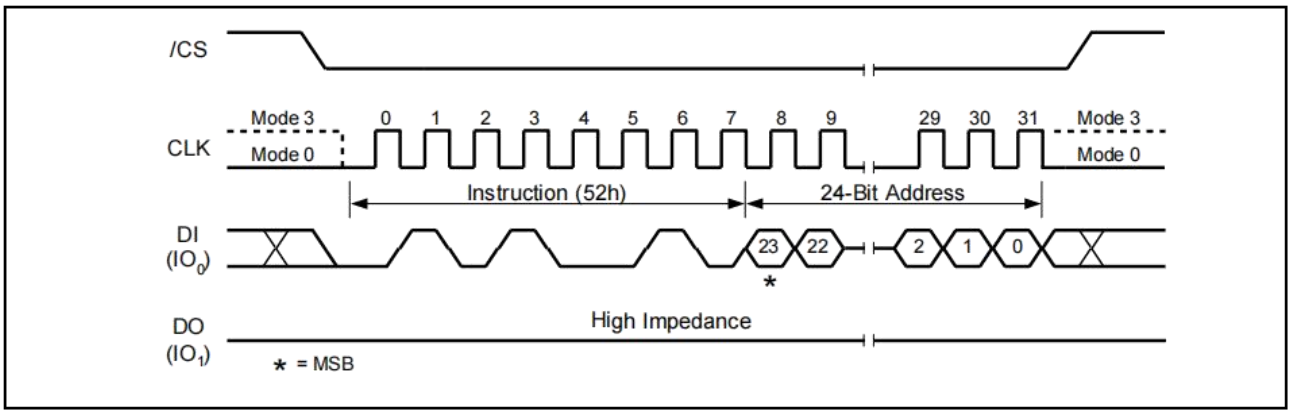

Figure 21. 32KB Block Erase Instruction

9.2.18. 64KB Block Erase (D8h)

The Block Erase instruction sets all memory within a specified block (64K-bytes) to the erased state of all 1s (FFh). A Write Enable instruction must be executed before the device will accept the Block Erase Instruction (Status Register bit WEL must equal 1). The instruction is initiated by driving the /CS pin low and shifting the instruction code “D8h” followed a 24-bit block address (A23-A0). The Block Erase instruction sequence is shown in Figure 22.

The /CS pin must be driven high after the eighth bit of the last byte has been latched. If this is not done the Block Erase instruction will not be executed. After /CS is driven high, the self-timed Block Erase instruction will commence for a time duration of tBE (See AC Characteristics). While the Block Erase cycle is in progress, the Read Status Register instruction may still be accessed for checking the status of the BUSY bit. The BUSY bit is a 1 during the Block Erase cycle and becomes a 0 when the cycle is finished and the device is ready to accept other instructions again. After the Block Erase cycle has finished the Write Enable Latch (WEL) bit in the Status Register is cleared to 0. The Block Erase instruction will not be executed if the addressed page is protected by the Block Protect (CMP, SEC, TB, BP2, BP1, and BP0) bits or the Individual Block/Sector Locks.

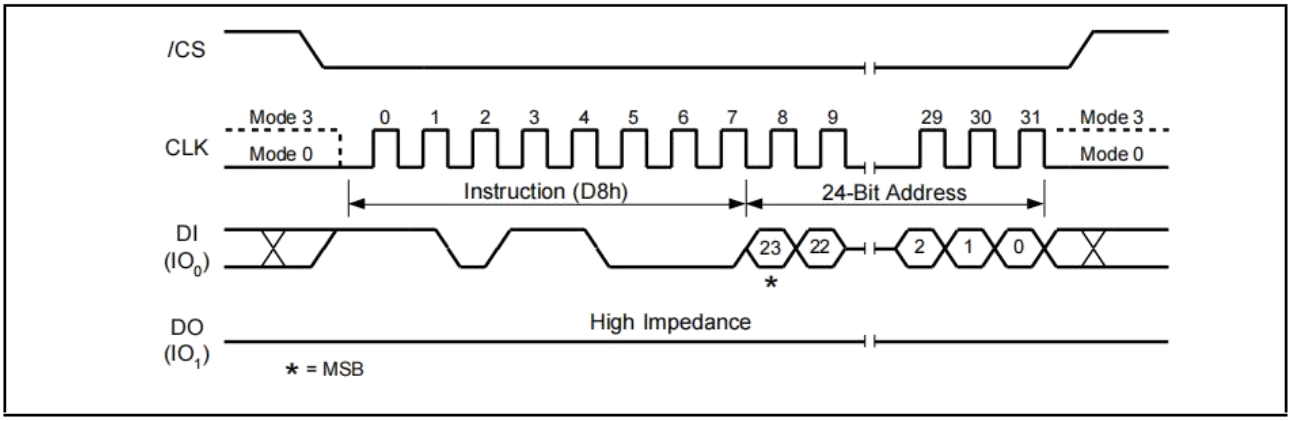

Figure 22. 64KB Block Erase Instruction

9.2.19. Chip Erase (C7h / 60h)

The Chip Erase instruction sets all memory within the device to the erased state of all 1s (FFh). A Write Enable instruction must be executed before the device will accept the Chip Erase Instruction (Status Register bit WEL must equal 1). The instruction is initiated by driving the /CS pin low and shifting the instruction code “C7h” or “60h”. The Chip Erase instruction sequence is shown in Figure 23.

The /CS pin must be driven high after the eighth bit has been latched. If this is not done the Chip Erase instruction will not be executed. After /CS is driven high, the self-timed Chip Erase instruction will commence for a time duration of tCE (See AC Characteristics). While the Chip Erase cycle is in progress, the Read Status Register instruction may still be accessed to check the status of the BUSY bit. The BUSY bit is a 1 during the Chip Erase cycle and becomes a 0 when finished and the device is ready to accept other instructions again. After the Chip Erase cycle has finished the Write Enable Latch (WEL) bit in the Status Register is cleared to 0. The Chip Erase instruction will not be executed if any memory region is protected by the Block Protect (CMP, SEC, TB, BP2, BP1, and BP0) bits or the Individual Block/Sector Locks.

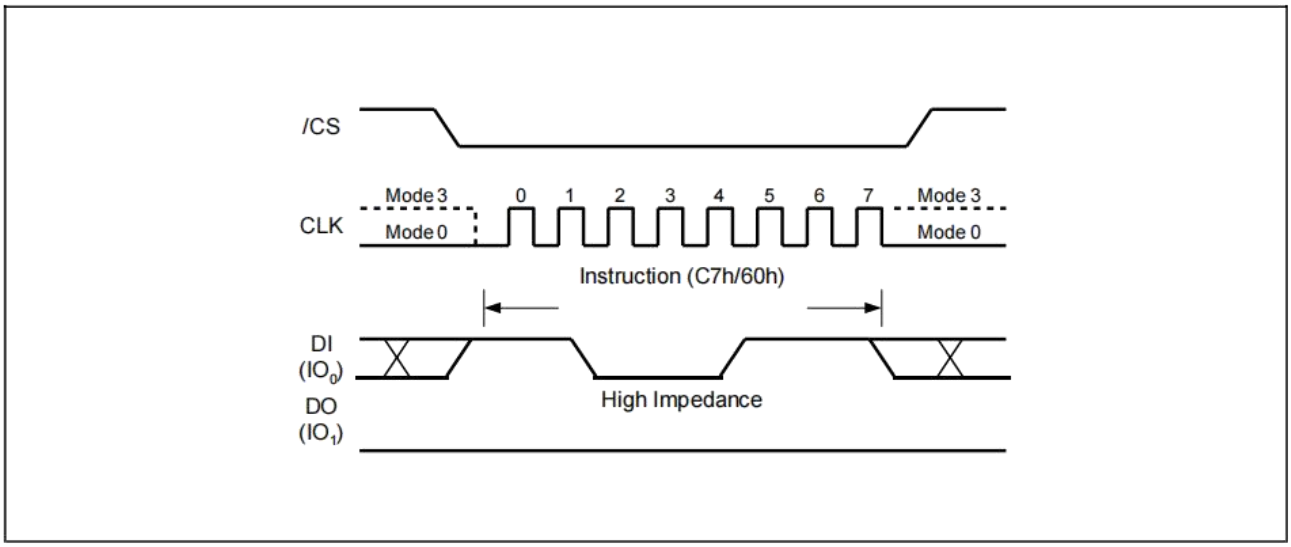

Figure 23. Chip Erase Instruction Sequence Diagram

9.2.20. Erase / Program Suspend (75h)

The Erase/Program Suspend instruction “75h”, allows the system to interrupt a Sector or Block Erase operation or a Page Program operation and then read from or program/erase data to, any other sectors or blocks. The Erase/Program Suspend instruction sequence is shown in Figure 24.

The Write Status Register instruction (01h) and Erase instructions (20h, 52h, D8h, C7h, 60h, 44h) are not allowed during Erase Suspend. Erase Suspend is valid only during the Sector or Block erase operation. If written during the Chip Erase operation, the Erase Suspend instruction is ignored. The Write Status Register instruction (01h) and Program instructions (02h, 32h, 42h) are not allowed during Program Suspend. Program Suspend is valid only during the Page Program or Quad Page Program operation.

The Erase/Program Suspend instruction “75h” will be accepted by the device only if the SUS bit in the Status Register equals to 0 and the BUSY bit equals to 1 while a Sector or Block Erase or a Page Program operation is on-going. If the SUS bit equals to 1 or the BUSY bit equals to 0, the Suspend instruction will be ignored by the device. A maximum of time of “tSUS” (See AC Characteristics) is required to suspend the erase or program operation. The BUSY bit in the Status Register will be cleared from 1 to 0 within “tSUS” and the SUS bit in the Status Register will be set from 0 to 1 immediately after Erase/Program Suspend. For a previously resumed Erase/Program operation, it is also required that the Suspend instruction “75h” is not issued earlier than a minimum of time of “tSUS” following the preceding Resume instruction “7Ah”.

Unexpected power off during the Erase/Program suspend state will reset the device and release the suspend state. SUS bit in the Status Register will also reset to 0. The data within the page, sector or block that was being suspended may become corrupted. It is recommended for the user to implement system design techniques against the accidental power interruption and preserve data integrity during erase/program suspend state.

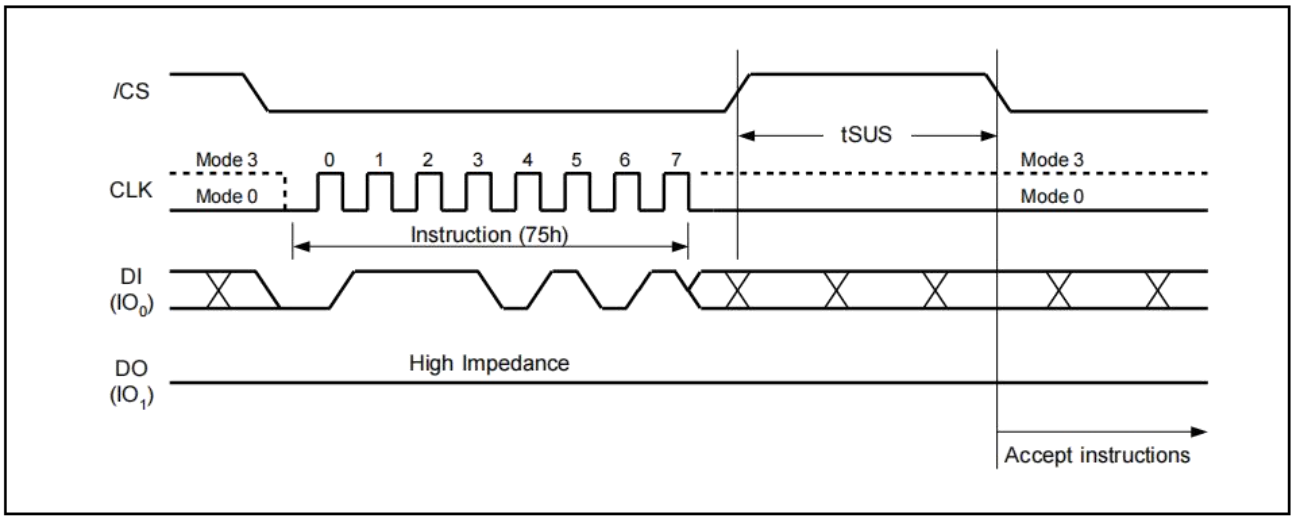

Figure 24. Erase/Program Suspend Instruction

9.2.21. Erase / Program Resume (7Ah)

The Erase/Program Resume instruction “7Ah” must be written to resume the Sector or Block Erase operation or the Page Program operation after an Erase/Program Suspend. The Resume instruction “7Ah” will be accepted by the device only if the SUS bit in the Status Register equals to 1 and the BUSY bit equals to 0. After issued the SUS bit will be cleared from 1 to 0 immediately, the BUSY bit will be set from 0 to 1 within 200ns and the Sector or Block will complete the erase operation or the page will complete the program operation. If the SUS bit equals to 0 or the BUSY bit equals to 1, the Resume instruction “7Ah” will be ignored by the device. The Erase/Program Resume instruction sequence is shown in Figure 25.

Resume instruction is ignored if the previous Erase/Program Suspend operation was interrupted by unexpected power off. It is also required that a subsequent Erase/Program Suspend instruction not to be issued within a minimum of time of “tSUS” following a previous Resume instruction.

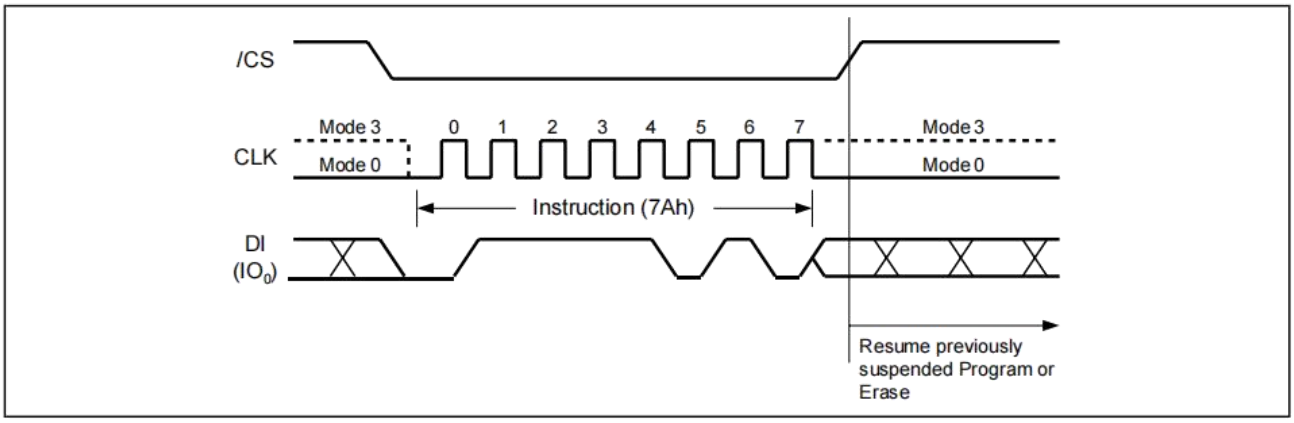

Figure 25. Erase/Program Resume Instruction

9.2.22. Power-down (B9h)

Although the standby current during normal operation is relatively low, standby current can be further reduced with the Power-down instruction. The lower power consumption makes the Power-down instruction especially useful for battery powered applications (See ICC1 and ICC2 in AC Characteristics). The instruction is initiated by driving the /CS pin low and shifting the instruction code “B9h” as shown in Figure 26.

The /CS pin must be driven high after the eighth bit has been latched. If this is not done the Power-down instruction will not be executed. After /CS is driven high, the power-down state will entered within the time duration of tDP (See AC Characteristics). While in the power-down state only the Release Power-down / Device ID (ABh) instruction, which restores the device to normal operation, will be recognized. All other instructions are ignored. This includes the Read Status Register instruction, which is always available during normal operation. Ignoring all but one instruction makes the Power Down state a useful condition for securing maximum write protection. The device always powers-up in the normal operation with the standby current of ICC1.

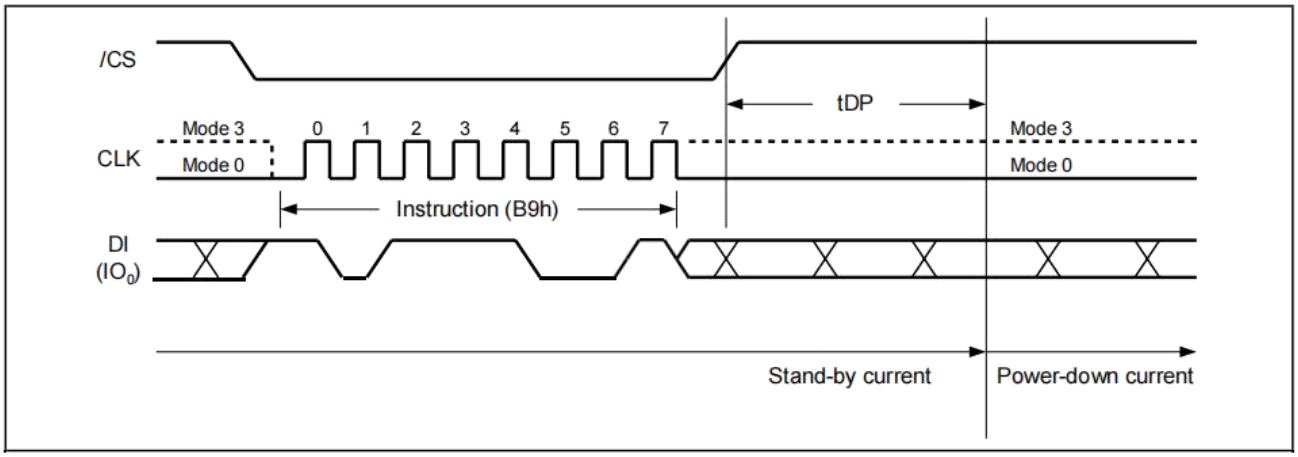

Figure 26. Deep Power-down Instruction

9.2.23. Release Power-down (ABh)

The Release from Power-down instruction is a multi-purpose instruction. It can be used to release the device from the power-down state. To release the device from the power-down state, the instruction is issued by driving the /CS pin low, shifting the instruction code “ABh” and driving /CS high as shown in Figure 27. Release from power-down will take the time duration of tRES1 (See AC Characteristics) before the device will resume normal operation and other instructions are accepted. The /CS pin must remain high during the tRES1 time duration.

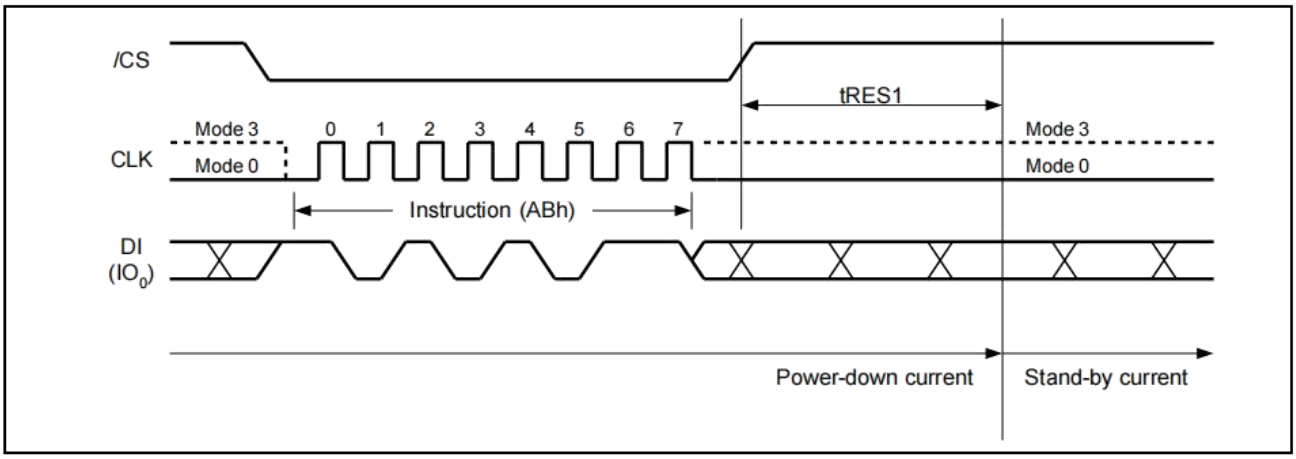

Figure 27. Release Power-down Instructio

9.2.24. ead Manufacturer / Device ID (90h)

The Read Manufacturer/Device ID instruction is an alternative to the Release from Power-down / Device ID instruction that provides both the JEDEC assigned manufacturer ID and the specific device ID.

The Read Manufacturer/Device ID instruction is very similar to the Release from Power-down / Device ID instruction. The instruction is initiated by driving the /CS pin low and shifting the instruction code “90h” followed by a 24-bit address (A23-A0) of 000000h. After which, the Manufacturer ID for Chuangfeixin and the Device ID are shifted out on the falling edge of CLK with most significant bit (MSB) first as show in Figure 28. The Device ID values for the HG25Q128 are listed in Manufacturer and Device Identification table. The instruction is completed by driving /CS high.

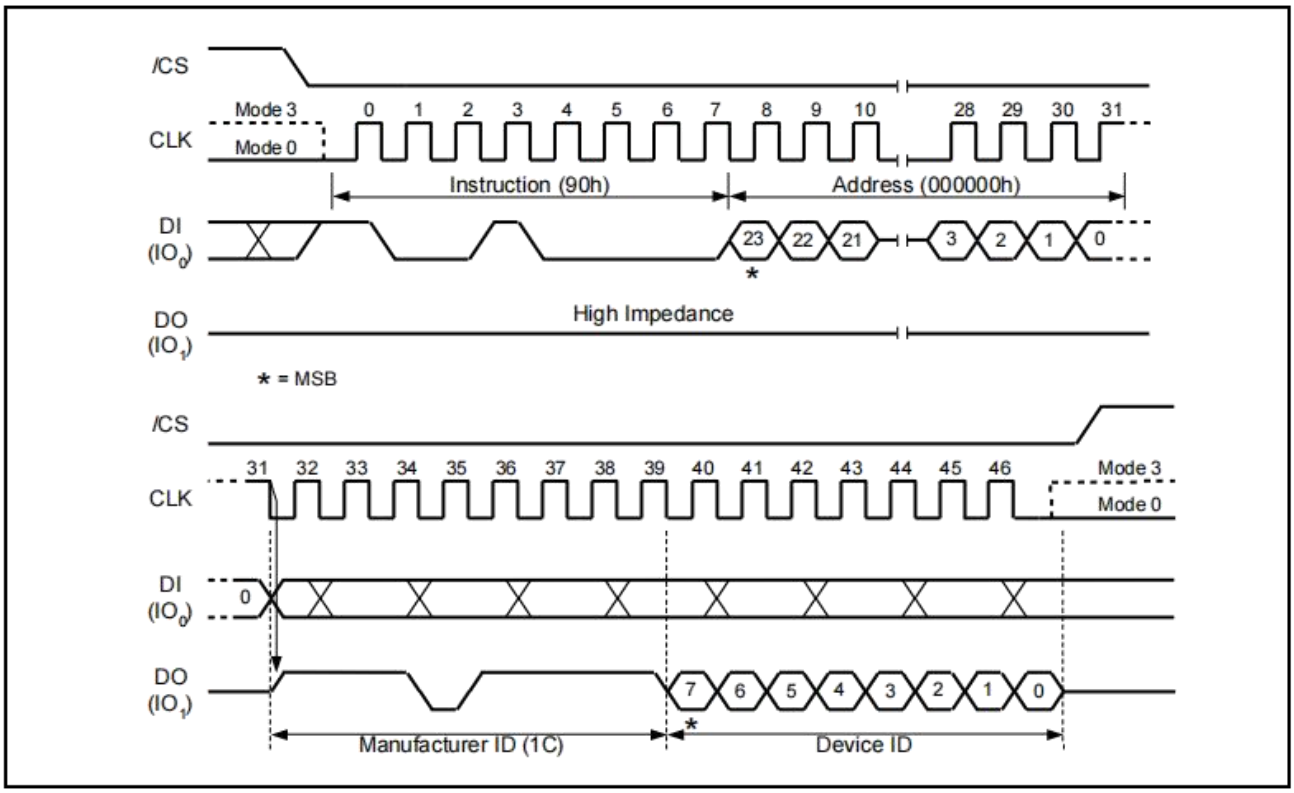

Figure 28. Read Manufacturer / Device ID Instruction

9.2.25. Read JEDEC ID (9Fh)

For compatibility reasons, theHG25Q128 provides several instructions to electronically determine the identity of the device. The Read JEDEC ID instruction is compatible with the JEDEC standard for SPI compatible serial memories that was adopted in 2003. The instruction is initiated by driving the /CS pin low and shifting the instruction code “9Fh”. The JEDEC assigned Manufacturer ID byte for Chuangfeixin two Device ID bytes, Memory Type (ID15-ID8) and Capacity (ID7-ID0) are then shifted out on the falling edge of CLK with most significant bit (MSB) first as shown in Figure 29. For memory type and capacity values refer to Manufacturer and Device Identification table.

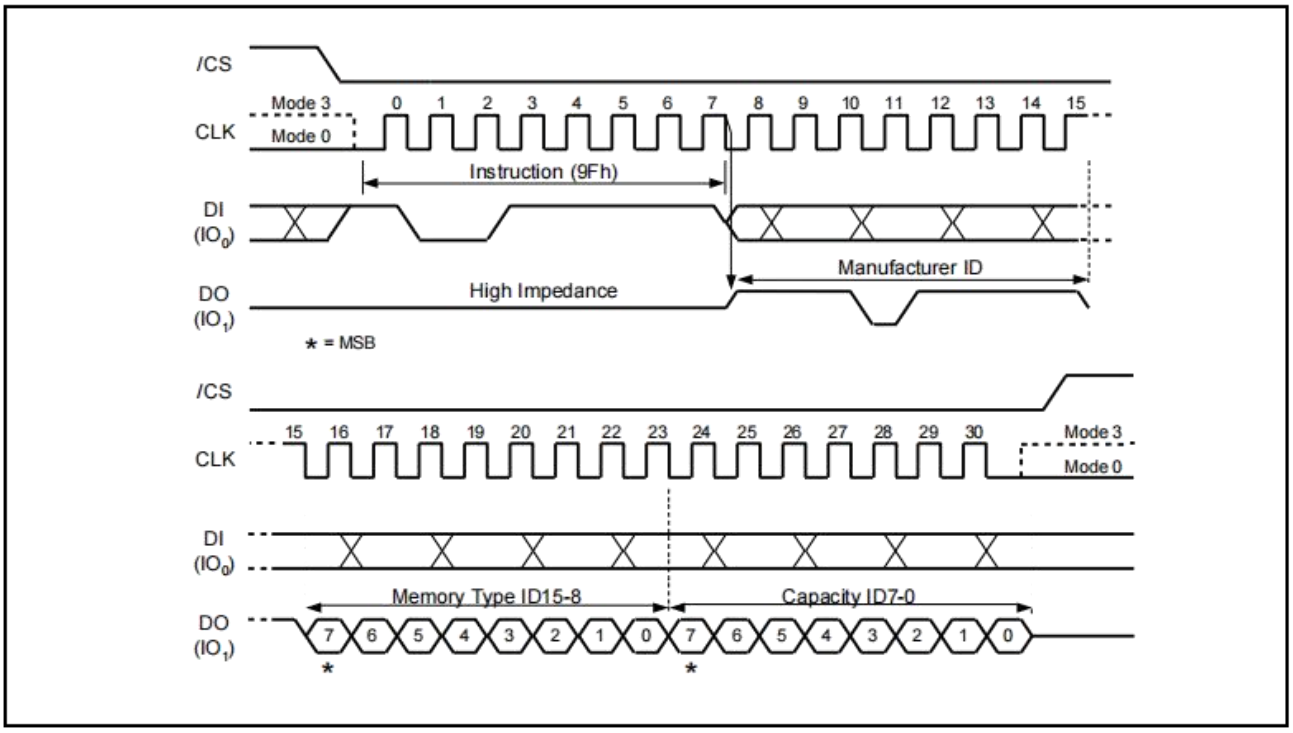

Figure 29. Read JEDEC ID Instruction

9.2.26. Read SFDP Register (5Ah)

The HG25Q128 features a 256-Byte Serial Flash Discoverable Parameter (SFDP) register that contains information about device configurations, available instructions and other features. The SFDP parameters are stored in one or more Parameter Identification (PID) tables. Currently only one PID table is specified, but more may be added in the future.

The Read SFDP Register instruction is compatible with the SFDP standard initially established in 2010 for PC and other applications, as well as the JEDEC standard JESD216-serials that is published in 2011. Most Chuangfeixin SPI Flash Memories shipped after June 2011 (date code 1124 and beyond) support the SFDP feature as specified in the applicable datasheet. The Read SFDP instruction is initiated by driving the /CS pin low and shifting the instruction code “5Ah” followed by a 24-bit address (A23-A0)(1) into the DI pin. Eight “dummy” clocks are also required before the SFDP register contents are shifted out on the falling edge of the 40th CLK with most significant bit (MSB) first as shown in Figure 30. For SFDP register values and descriptions.

Note 1: A23-A8 = 0; A7-A0 are used to define the starting byte address for the 256-Byte SFDP Register

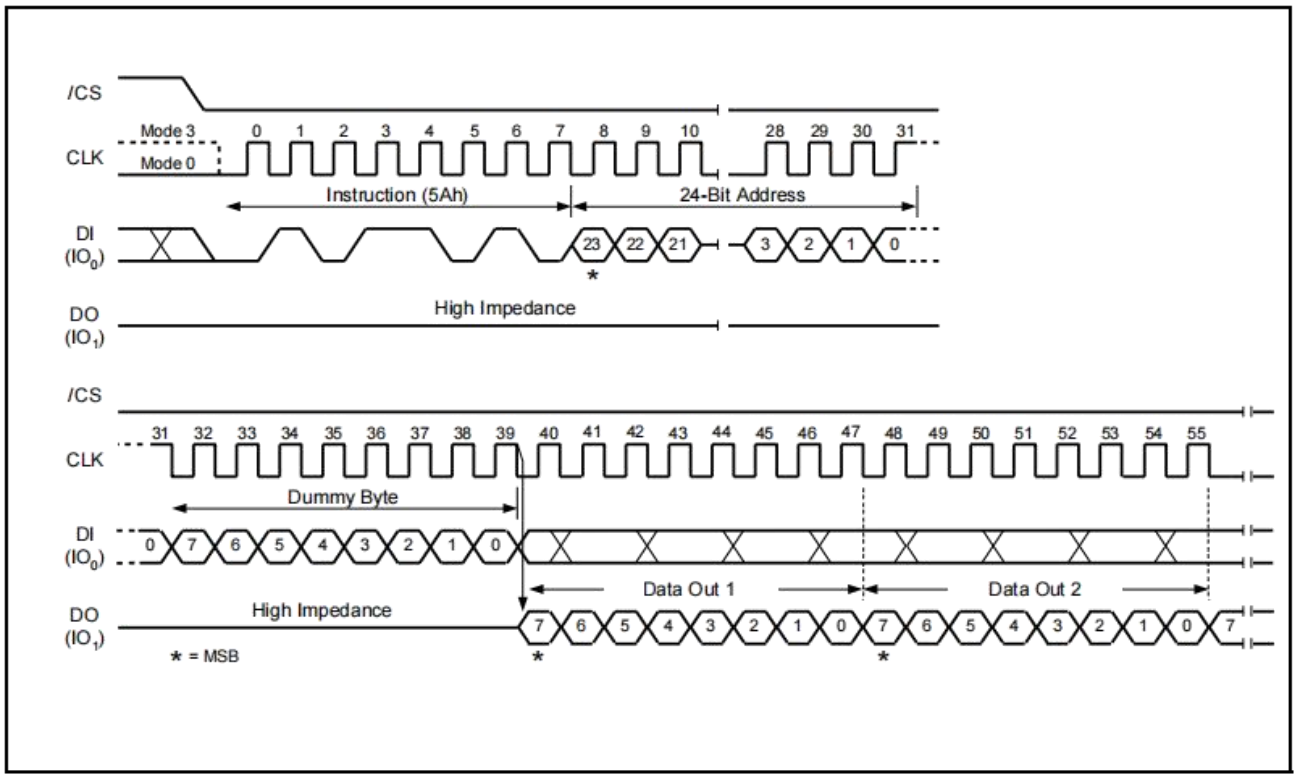

Figure 30. Read SFDP Register Instruction Sequence Diagram

9.2.27. Erase Security Registers (44h)

The HG25Q128 offers three 256-byte Security Registers which can be erased and programmed individually. These registers may be used by the system manufacturers to store security and other important information separately from the main memory array.

The Erase Security Register instruction is similar to the Sector Erase instruction. A Write Enable instruction must be executed before the device will accept the Erase Security Register Instruction (Status Register bit WEL must equal 1). The instruction is initiated by driving the /CS pin low and shifting the instruction code “44h” followed by a 24-bit address (A23-A0) to erase one of the three security registers.

ADDRESS	A23-16	A15-12	A11-8	A7-0
Security Register #1	00h	0 1 0 0	0 0 0 0	Don’t Care
Security Register #2	00h	1 0 0 0	0 0 0 0	Don’t Care
Security Register #3	00h	1 1 0 0	0 0 0 0	Don’t Care

The Erase Security Register instruction sequence is shown in Figure 31. The /CS pin must be driven high after the eighth bit of the last byte has been latched. If this is not done the instruction will not be executed. After /CS is driven high, the self-timed Erase Security Register operation will commence for a time duration of tSE (See AC Characteristics). While the Erase Security Register cycle is in progress, the Read Status Register instruction may still be accessed for checking the status of the BUSY bit. The BUSY bit is a 1 during the erase cycle and becomes a 0 when the cycle is finished and the device is ready to accept other instructions again. After the Erase Security Register cycle has finished the Write Enable Latch (WEL) bit in the Status Register is cleared to 0. The Security Register Lock Bits (LB3-1) in the Status Register-2 can be used to OTP protect the security registers. Once a lock bit is set to 1, the corresponding security register will be permanently locked, Erase Security Register instruction to that register will be ignored (Refer to section 8.1.9 for detail descriptions).

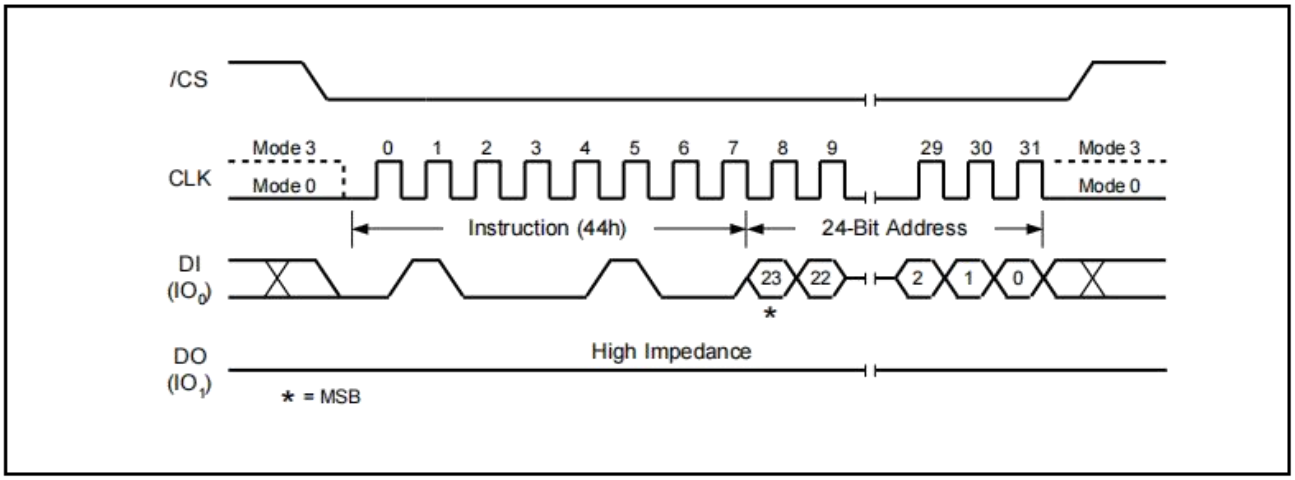

Figure 31. Erase Security Registers Instruction

9.2.28. Program Security Registers (42h)

The Program Security Register instruction is similar to the Page Program instruction. It allows from one byte to 256 bytes of security register data to be programmed at previously erased (FFh) memory locations. A Write Enable instruction must be executed before the device will accept the Program Security Register Instruction (Status Register bit WEL= 1). The instruction is initiated by driving the /CS pin low then shifting the instruction code “42h” followed by a 24-bit address (A23-A0) and at least one data byte, into the DI pin. The /CS pin must be held low for the entire length of the instruction while data is being sent to the device.

ADDRESS	A23-16	A15-12	A11-8	A7-0
Security Register #1	00h	0 1 0 0	0 0 0 0	Byte Address
Security Register #2	00h	1 0 0 0	0 0 0 0	Byte Address
Security Register #3	00h	1 1 0 0	0 0 0 0	Byte Address

The Program Security Register instruction sequence is shown in Figure 32. The Security Register Lock Bits (LB3-1) in the Status Register-2 can be used to OTP protect the security registers. Once a lock bit is set to 1, the corresponding security register will be permanently locked, Program Security Register instruction to that register will be ignored (See 8.1.9 for detail descriptions).

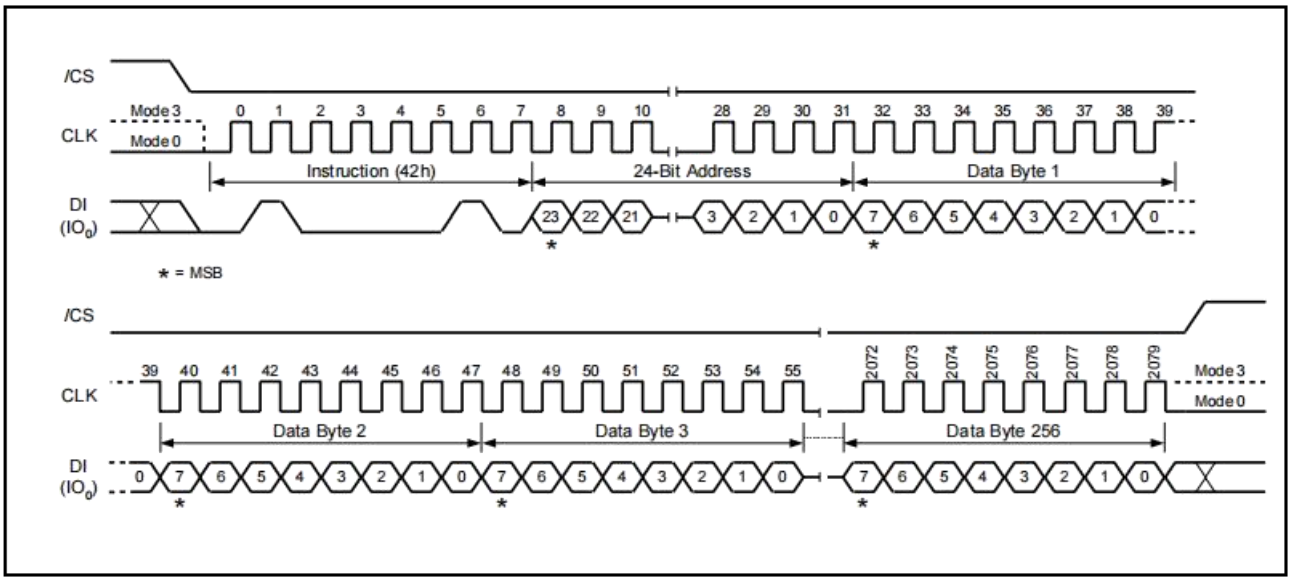

Figure 32. Program Security Registers Instruction

9.2.29. Read Security Registers (48h)

The Read Security Register instruction is similar to the Fast Read instruction and allows one or more data bytes to be sequentially read from one of the four security registers. The instruction is initiated by driving the /CS pin low and then shifting the instruction code “48h” followed by a 24-bit address (A23-A0) and eight “dummy” clocks into the DI pin. The code and address bits are latched on the rising edge of the CLK pin. After the address is received, the data byte of the addressed memory location will be shifted out on the DO pin at the falling edge of CLK with most significant bit (MSB) first. The byte address is automatically incremented to the next byte address after each byte of data is shifted out. Once the byte address reaches the last byte of the register (byte address FFh), it will reset to address 00h, the first byte of the register, and continue to increment. The instruction is completed by driving /CS high. The Read Security Register instruction sequence is shown in Figure 33. If a Read Security Register instruction is issued while an Erase, Program or Write cycle is in process (BUSY=1) the instruction is ignored and will not have any effects on the current cycle. The Read Security Register instruction allows clock rates from D.C. to a maximum of FR (see AC Electrical Characteristics).

ADDRESS	A23-16	A15-12	A11-8	A7-0
Security Register #1	00h	0 1 0 0	0 0 0 0	Byte Address
Security Register #2	00h	1 0 0 0	0 0 0 0	Byte Address
Security Register #3	00h	1 1 0 0	0 0 0 0	Byte Address

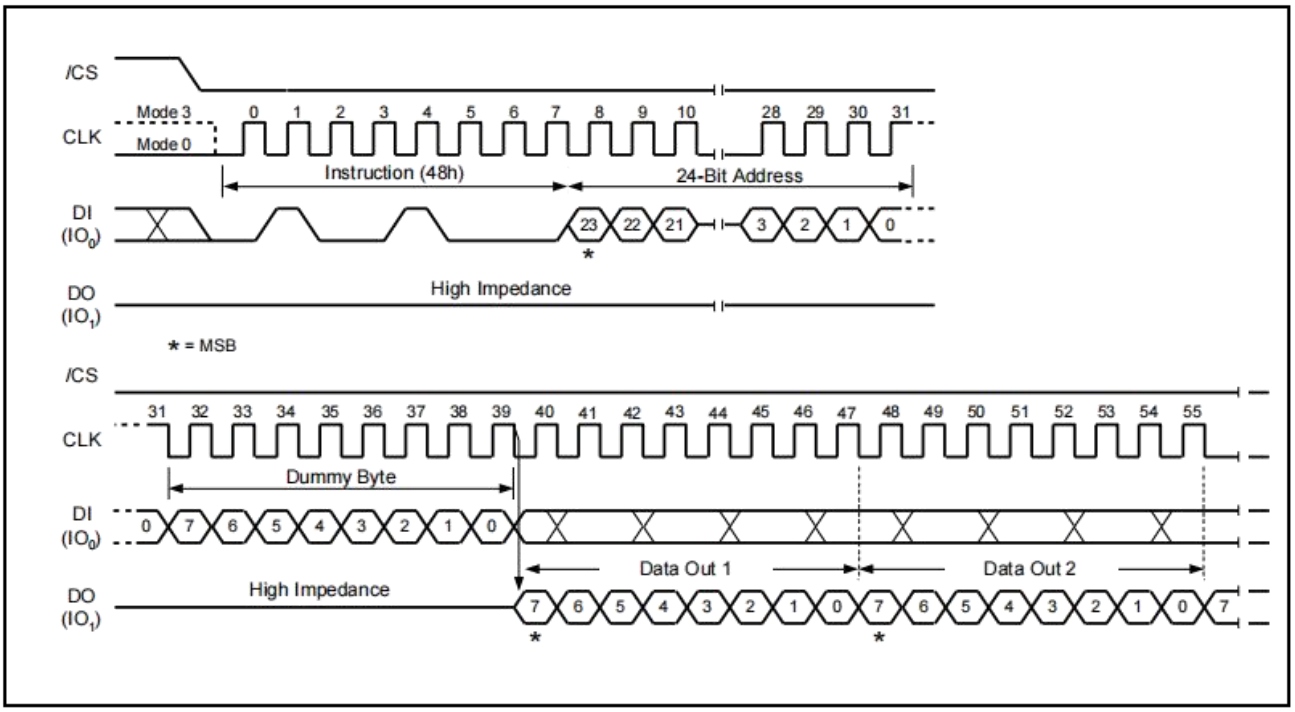

Figure 33. Read Security Registers Instruction

9.2.30. Enable Reset (66h) and Reset Device (99h)

Because of the small package and the limitation on the number of pins, the HG25Q128 provide a software Reset instruction instead of a dedicated RESET pin. Once the Reset instruction is accepted, any on-going internal operations will be terminated and the device will return to its default power-on state and lose all the current volatile settings, such as Volatile Status Register bits, Write Enable Latch (WEL) status, Program/Erase Suspend status, Read parameter setting (P7-P0), and WrapBit setting (W6-W4).

“Enable Reset (66h)” and “Reset (99h)” instructions can be issued in SPI. To avoid accidental reset, both instructions must be issued in sequence. Any other commands other than “Reset (99h)” after the “Enable Reset (66h)” command will disable the “Reset Enable” state. A new sequence of “Enable Reset (66h)” and “Reset (99h)” is needed to reset the device. Once the Reset command is accepted by the device, the device will take approximately tRST=30us to reset. During this period, no command will be accepted.

Data corruption may happen if there is an on-going or suspended internal Erase or Program operation when Reset command sequence is accepted by the device. It is recommended to check the BUSY bit and the SUS bit in Status Register before issuing the Reset command sequence.

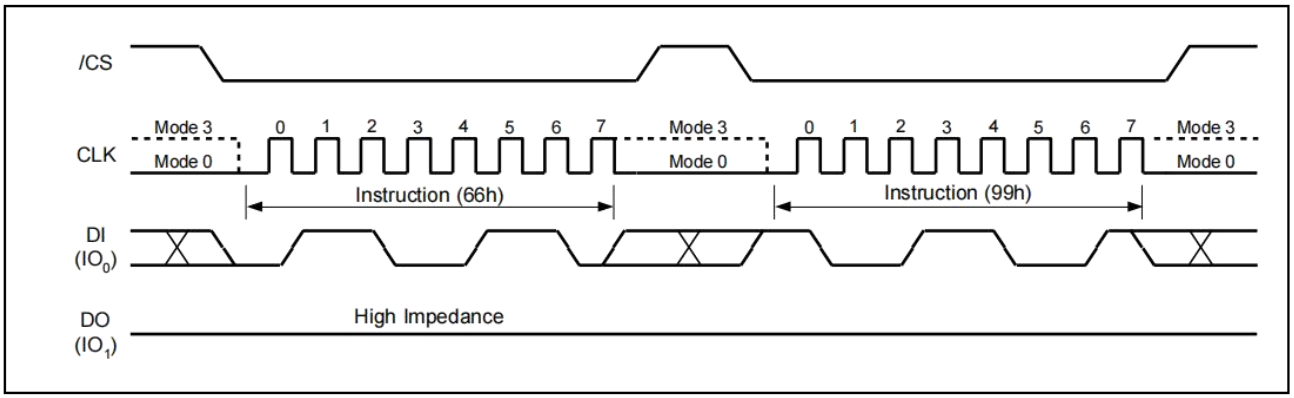

Figure 34. Enable Reset and Reset Instruction Sequence

10. ELECTRICAL CHARACTERISTICS

10.1. Absolute Maximum Ratings (1)

PARAMETERS	SYMBOL	CONDITIONS	RANGE	UNIT
Supply Voltage	VCC		–0.6 to 4.6	V
Voltage Applied to Any Pin	VIO	Relative to Ground	–0.6 to VCC+0.4	V
Transient Voltage on any Pin	VIOT	<20nS Transient Relative to Ground	–2.0V to VCC+2.0V	V
Storage Temperature	TSTG		–65 to +150	°C
Lead Temperature	TLEAD		260	°C
Electrostatic Discharge Voltage	VESD	Human Body Model(3)	–2000 to +2000	V

Notes:

1. This device has been designed and tested for the specified operation ranges. Proper operation outside of these levels is not guaranteed. Exposure to absolute maximum ratings may affect device reliability. Exposure beyond absolute maximum ratings may cause permanent damage.

2. Compliant with JEDEC Standard J-STD-20C for small body Sn-Pb or Pb-free (Green) assembly and the European directive on restrictions on hazardous substances (RoHS) 2002/95/EU.

3.JEDEC Std JESD22-A114A (C1=100pF, R1=1500 ohms, R2=500 ohms).

10.2. Operating Ranges

PARAMETER	SYMBOL	CONDITIONS	SPEC		UNIT
			MIN	MAX	
Supply Voltage(1)	VCC	Industrial and Industrial Plus Temp	2.7	3.6	V
Ambient Temperature, Operating	TA	Industrial	–40	+85	°C
		Industrial Plus	–40	+105	°C

Note:

1. VCC voltage during Read can operate across the min and max range but should not exceed ±10% of the programming (erase/write) voltag

10.3. Power-Up Power-Down Timing and Requirements

PARAMETERS	SYMBOL	SPEC		UNIT
		MIN	MAX	
VCC(min)to/CS Low	TVSL(1)	20		μs
Time Delay Before Write Instruction	TPUW(1)	5		ms
Write Imhibit Threshold Voltage	VW(1)	1.0	2.0	V

Notes:

1. These parameters are characterized only.
2. Normal precautions must be taken for supply rail decoupling to stabilize the VCC supply at the device. Each device in a system should have the VCC rail decoupled by a suitable capacitor close to the package supply connection (this capacitor is generally of the order of 20μf ,0.1μf and 0.01μf in parallel)
3. CS# must track Vcc during power up, if it is not available, CS# ahead of Vcc power up timing sequence is recommended

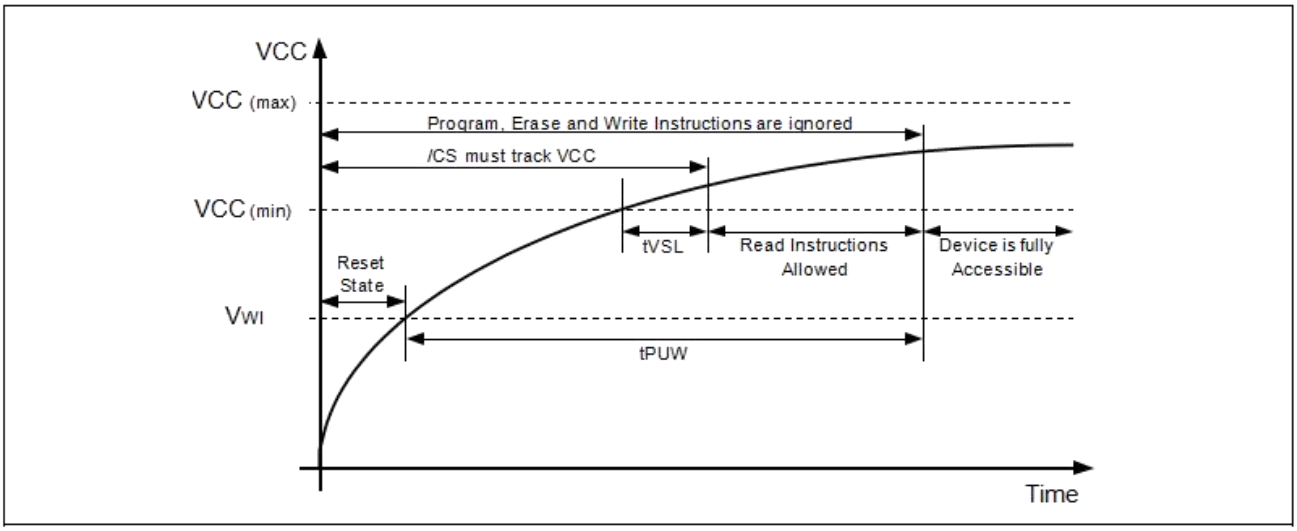

Figure 35a. Power-up Timing and Voltage Levels

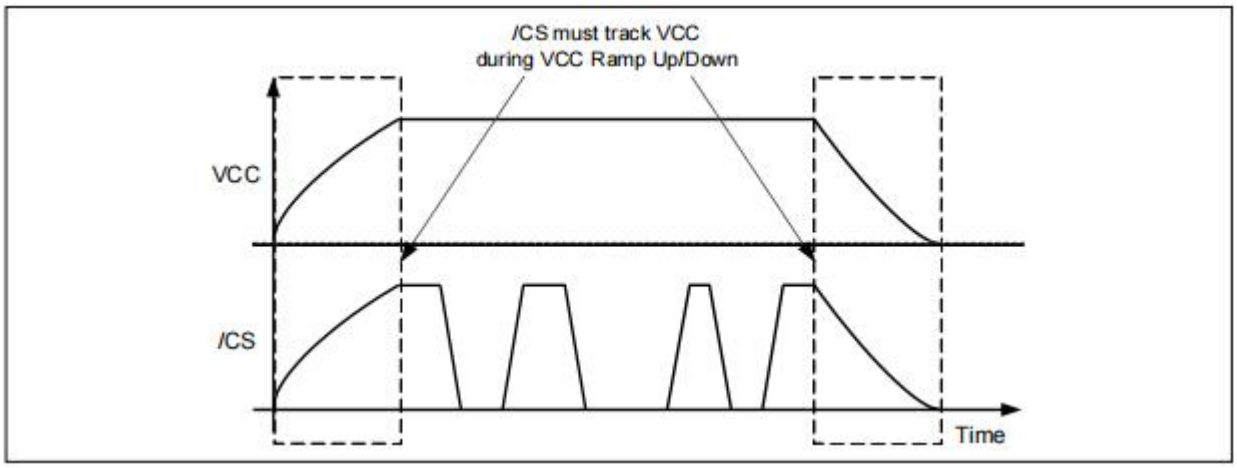

Figure 35b. Power-up, Power-Down Requirement

10.4. DC Electrical Characteristics

PARAMETER	SYMBOL	CONDITIONS	SPEC			UNIT
			MIN	TYP	MAX	
Input Capacitance	C_{IN}(1)	V_{IN} = 0V(1)			6	pF
Output Capacitance	Cout(1)	V_{OUT} = 0V(1)			8	pF
Input Leakage	I_{LI}				±2	μA
I/O Leakage	I_{LO}				±2	μA
Standby Current	I_{CC1}	/CS = VCC, VIN = GND or VCC		15	25	μA
Power-down Current	I_{CC2}	/CS = VCC, VIN = GND or VCC		3	5	μA
Current Read Data / Dual /Quad 10MHz(2)	I_{CC3}	C = 0.1 VCC / 0.9 VCC DO = Open		10	15	mA
Current Read Data / Dual /Quad 55MHz(2)	I_{CC3}	C = 0.1 VCC / 0.9 VCC DO = Open		13	18	mA
Current Read Data / Dual /Quad 80MHz(2)	I_{CC3}	C = 0.1 VCC / 0.9 VCC DO = Open		25	28	mA
Current Write StatusRegister	I_{CC4}	/CS = VCC		12	15	mA
Current Page Program	I_{CC5}	/CS = VCC		35	40	mA
Current Sector/BlockErase	I_{CC6}	/CS = VCC		28	35	mA
Current Chip Erase	I_{CC7}	/CS = VCC		28	30	mA
Input Low Voltage	V_{IL}		–0.5		VCC x 0.2	V
Input High Voltage	V_{IH}		VCC x 0.8		VCC + 0.4	V
Output Low Voltage	V_{OL}	I_{OL} = 100 μA			0.2	V
Output High Voltage	V_{OH}	I_{OH} = –100 μA	VCC – 0.2			V

Notes:

1. Tested on sample basis and specified through design and characterization data. TA = 25° C, VCC = 3.3V.
2. Checker Board Pattern.

10.5. AC Measurement Conditions

PARAMETER	SYMBOL	SPEC		UNIT
		MIN	MAX	
Load Capacitance	C_L		30	pF
Input Rise and Fall Times	T_R, T_F		2.4	ns
Input Pulse Voltages	V_{IN}	0.2 VCC to 0.8 VCC		V
Input Timing Reference Voltages	IN	0.5VCC		V
Output Timing Reference Voltages	OUT	0.5 VCC		V

Note:

1. Output Hi-Z is defined as the point where data out is no longer driven.

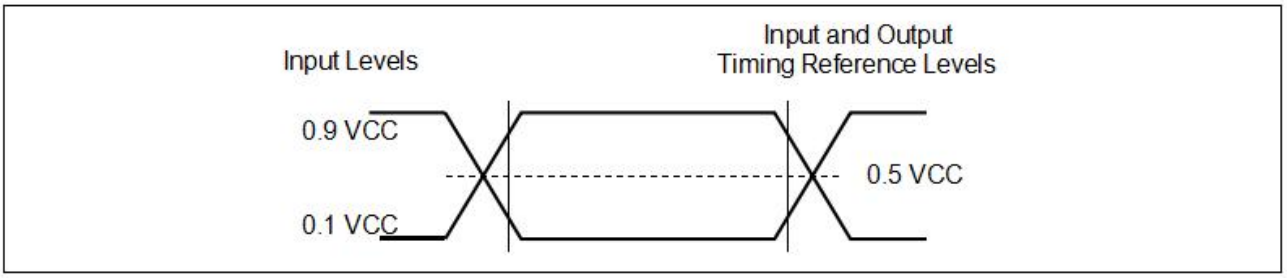

Figure 36. AC Measurement I/O Waveform

10.6. AC Electrical Characteristics

DESCRIPTION	SYMBOL	ALT	SPEC			UNIT
			MIN	TYP	MAX	
Clock frequency for Fast Read(0Bh), Dual Output(3Bh), Dual I/O(BBh), on 2.7V-3.0V power supply	F_{R1}	f_{C1}	D.		80	MHz
Clock frequency for Fast Read(0Bh), Dual Output(3Bh), Dual I/O(BBh), on 3.0V-3.6V power supply	F_{R2}	f_{C2}	D.		104	MHz
Clock frequency for Quad Output(6Bh), Quad I/O(EBh), Quad I/O Word Fast Read (E7h), on 2.7V-3.0V power supply	F_{R3}	f_{C3}	D.		55	MHz
Clock frequency for Quad Output(6Bh), Quad I/O(EBh), Quad I/O Word Fast Read(E7h), on 3.0V-3.6V power supply	F_{R4}	f_{C4}	D.		80	MHz
Clock frequency for Read Data(03h), Read Status Register(05h/35h/15h), Read Identification(9Fh)	f_R		D.		55	MHz
Clock High, Low Time for all instructions except for Read Data (03h)	t_{CLH}, t_{CLL}(1)		45%PC			ns
Clock High, Low Time for Read Data (03h) instruction	t_{CRLH}, t_{CRLL}(1)		45%PC			ns
Clock Rise Time peak to peak	t_{CLCH}(2)		0.1			V/ns
Clock Fall Time peak to peak	t_{CHCL}(2)		0.1			V/ns

/CS Active Setup Time relative to CLK	t_{SLCH}	t_{CSS}	3			ns
/CS Not Active Hold Time relative to CLK	t_{CHSL}		3			ns
Data In Setup Time	t_{DVCH}	t_{DSU}	3.5			ns
Data In Hold Time	t_{CHDX}	t_{DH}	2			ns
/CS Active Hold Time relative to CLK	t_{CHSH}		3			ns
/CS Not Active Setup Time relative to CLK	t_{SHCH}		3			ns
/CS Deselect Time (for Read)	t_{SHSL1}	t_{CSH}	10			ns
/CS Deselect Time (for Erase or Program or Write)	t_{SHSL2}	t_{CSH}	50			ns
Output Disable Time	t_{SHQZ}(2)	t_{DIS}			7	ns
Clock Low to Output Valid	t_{CLQV}	t_V			8	ns
Output Hold Time	t_{CLQX}	t_{HO}	1.5			ns
Write Protect Setup Time Before /CS Low	t_{WHSL}(3)		20			ns
Write Protect Hold Time After /CS High	t_{SHWL}(3)		100			ns
/CS High to Power-down Mode	t_{DP}(2)				3	μs
/CS High to Standby Mode without ID Read	t_{RES1}(2)				3	μs
/CS High to Standby Mode with ID Read	t_{RES2}(2)				1.8	μs
/CS High to next Instruction after Suspend	t_{SUS}(2)				20	μs
/CS High to next Instruction after Reset	t_{RST}(2)				30	μs
/RESET pin Low period to reset the device	t_{RESET}(2)		1			μs
Write Status Register Time	t_W			10	15	ms
Page Program Time	t_{PP}			1.0	3	ms
Sector Erase Time (4KB)	t_{SE}			80	400	ms
Block Erase Time (32KB)	t_{BE1}			150	1,600	ms
Block Erase Time (64KB)	t_{BE2}			250	2,000	ms
Chip Erase Time	t_{CE}			65	120	s

Notes:

1. Clock high or Clock low must be more than or equal to 45%Pc. Pc = 1/fc(max).
2. Value guaranteed by design and/or characterization, not 100% tested in production.
3. Only applicable as a constraint for a Write Status Register instruction when SRP=1.

10.7. Serial Output Timing

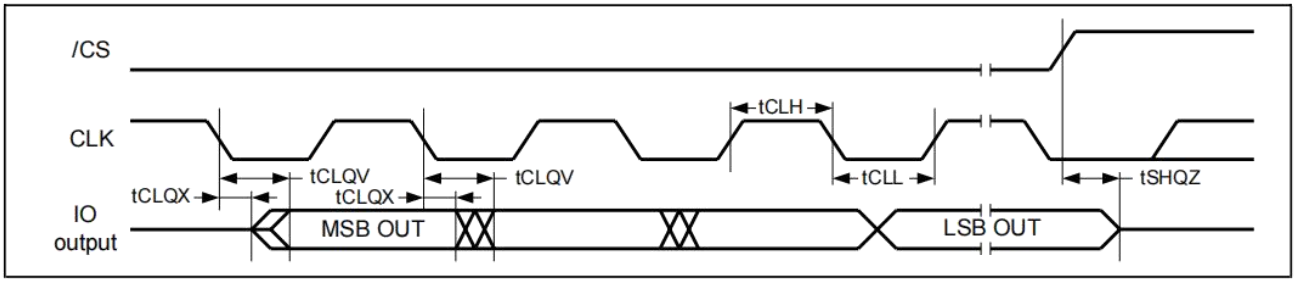

10.8. Serial Input Timing

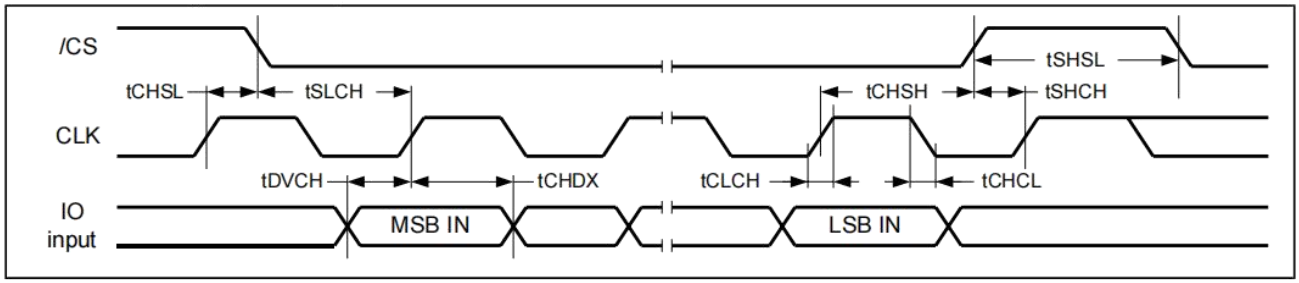

10.9. /WP Timing

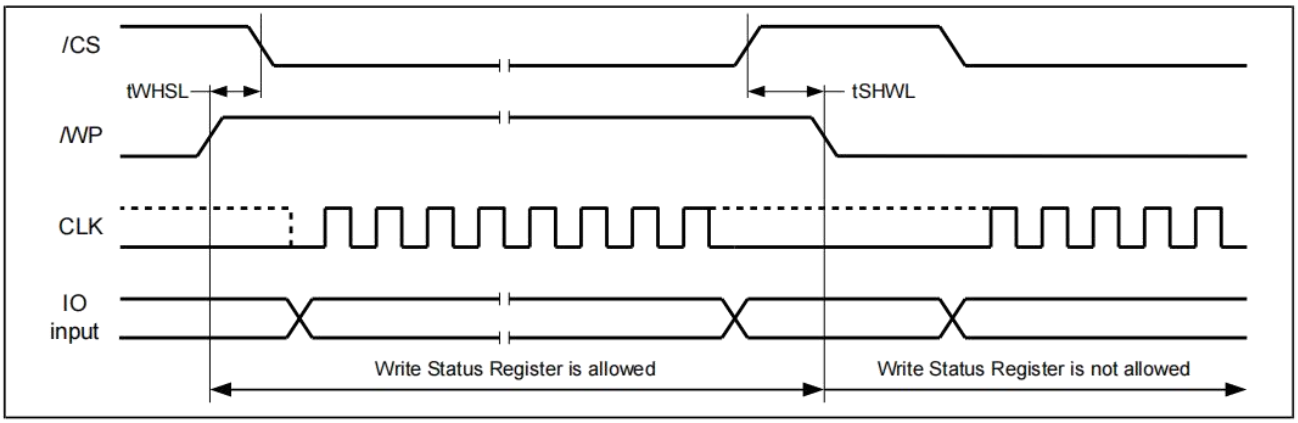

11. Physical Dimensions

11.1. SOP-8 208MIL

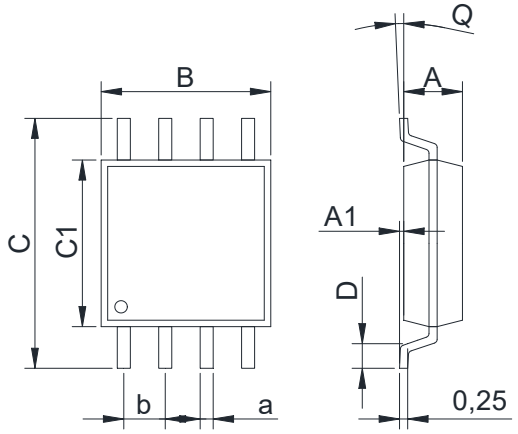

Dimensions In Millimeters(SOP-8 208MIL)									
Symbol:	A	A1	B	C	C1	D	Q	a	b
Min:	1.70	0.05	5.18	7.70	5.18	0.5	0°	0.35	1.27 BSC
Max:	1.91	0.25	5.38	8.70	5.38	0.8	8°	0.48	

11.2. DFN-8 4*4

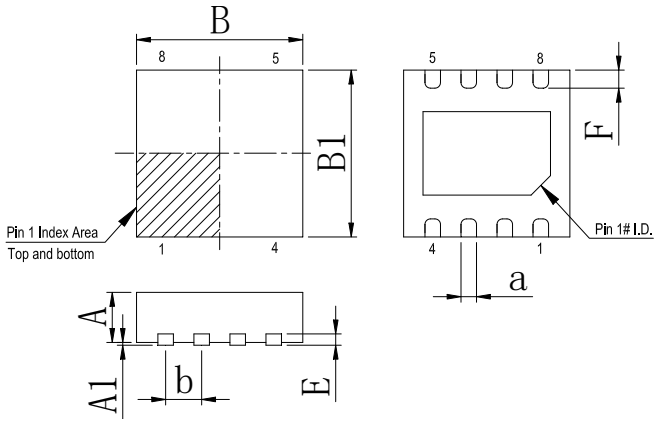

Dimensions In Millimeters(DFN-8 4*4)								
Symbol:	A	A1	B	B1	E	F	a	b
Min:	0.85	0.0	3.9	3.9	0.23	0.30	0.20	0.80TYP
Max:	0.95	0.05	4.1	4.1	0.30	0.50	0.34	

Revision History

REVISION NUMBER	DATE	REVISION	PAGE
V1.0	2019-3	New	1-55
V1.1	2022-6	Update encapsulation type、Update SOP-8 PACKAGE	1
V1.2	2024-11	Update Lead Temperature	46
V1.3	2025-11	Update important statements	54

IMPORTANT STATEMENT:

Huaguan Semiconductor reserves the right to change products and services offered without prior notice. Customers should obtain the latest relevant information before placing orders and verify that such information is current and complete. Huaguan Semiconductor assumes no responsibility or liability for altered documents.

Customers are responsible for complying with safety standards and implementing safety measures when using Huaguan Semiconductor products in system design and end-product manufacturing. You assume full responsibility for: selecting the appropriate Huaguan Semiconductor products for your application; designing, validating, and testing your application; and ensuring that your application complies with applicable standards and all other safety, security, or other requirements. This is to prevent potential risks that may lead to personal injury or property damage.

Huaguan Semiconductor products are not approved for use in life support, military, aerospace, or other high-risk applications. Huaguan products are neither intended nor warranted for use in such systems or equipment. Any failure or malfunction may lead to personal injury or severe property damage. Such applications are deemed "Unsafe Use." Unsafe Use includes, but is not limited to: surgical and medical equipment, nuclear energy control equipment, aircraft or spacecraft instruments, control or operation of vehicle power, braking, or safety systems, traffic signal instruments, all types of safety devices, and any other applications intended to support or sustain life. Huaguan Semiconductor shall not be liable for consequences resulting from Unsafe Use in these fields. Users must independently evaluate and assume all risks. Any issues, liabilities, or losses arising from the use of products beyond their approved applications shall be solely borne by the user. Users may not claim any compensation from Huaguan Semiconductor based on these terms. If any third party claims against Huaguan Semiconductor due to such Unsafe Use, the user shall compensate Huaguan Semiconductor for all resulting damages and liabilities.

Huaguan Semiconductor provides technical and reliability data (including datasheets), design resources (including reference designs), application or other design advice, web tools, safety information, and other resources for its semiconductor products. However, no guarantee is made that these resources are free from defects, and no express or implied warranties are provided. The use of testing and other quality control techniques is limited to Huaguan Semiconductor's quality assurance scope. Not all parameters of each device are tested.

Huaguan Semiconductor's documentation authorizes you to use these resources only for developing applications related to the products described herein. You are not granted rights to any other intellectual property of Huaguan Semiconductor or any third party. Any other reproduction or display of these resources is strictly prohibited. You shall fully indemnify Huaguan Semiconductor and its agents against any claims, damages, costs, losses, and liabilities arising from your use of these resources. Huaguan Semiconductor shall not be held responsible.