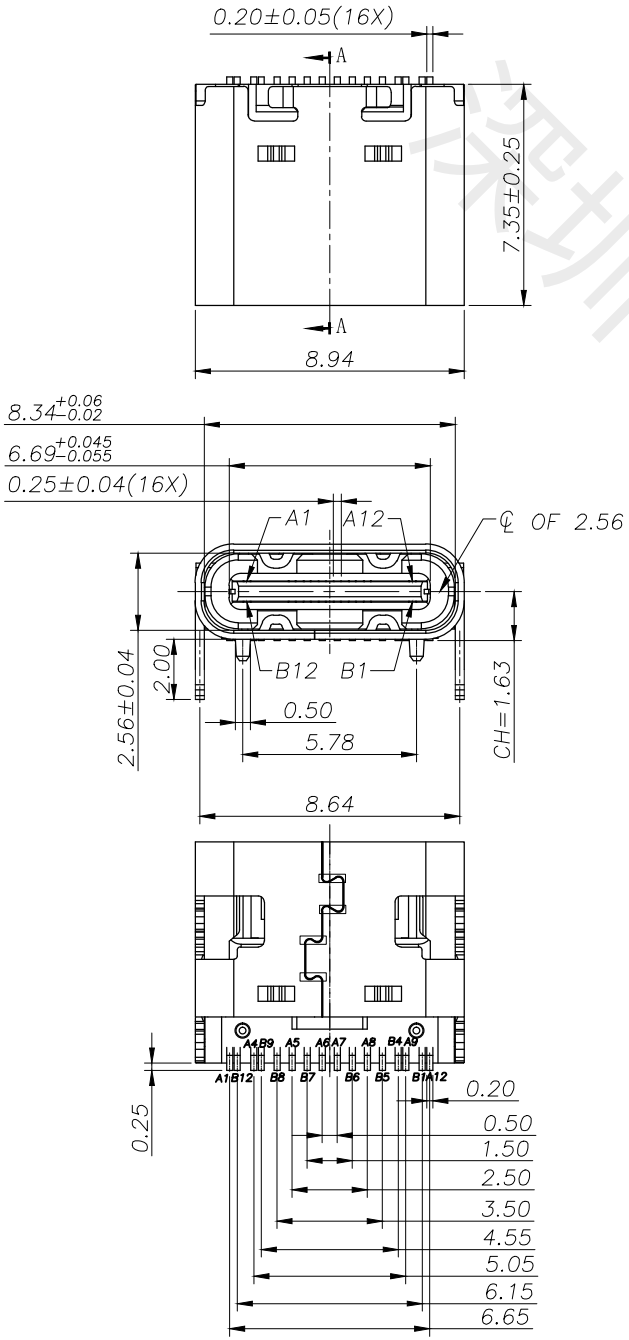

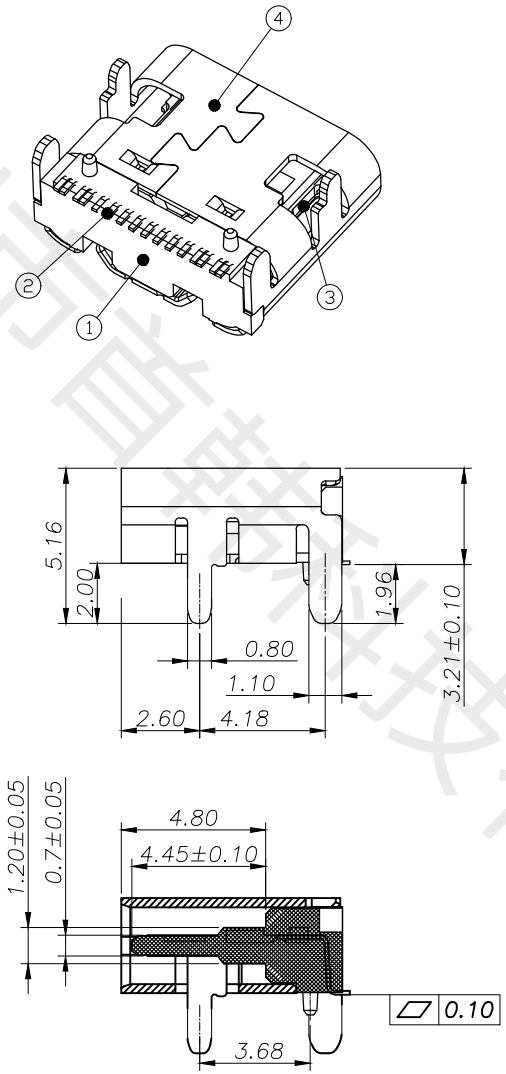

SECTION:A–A

NOTE:

1.MATERIAL SPECIFICATION:
- 1.HOUSING:HIGH TEMPERATURE RESISTANT PLASTIC,UL94 V–0.
- 2.TERMINAL: COPPER ALLOY(C7025)
- 3.MID PLATE: STAINLESS STEEL(SUS201)
- 4.FRONT SHELL: STAINLESS STEEL(SUS201)

2.PLATING SPECIFICATION:

2–1.TERMINAL:
Ni 50u" MIN. UNDER PLATED OVER ALL.
Au PLATED ON THE FUNCTIONAL AREA OF CONTACT.
(GOLD PLATING THICKNESS FOLLOW THE P/N)
PLATING SPECIFICATIONS OF THE SOLDER AREA FOLLOW THE P/N

2–2.FRONT SHELL:
PLATING SPECIFICATIONS FOLLOW THE P/N

2–3.MID PLATE PLATE:
CLEAR ONLY

3.MECHANICAL PERFORMANCE,
- 3–1.INSERTION FORCE: 0.5~2.0kgf.
- 3–2.REMOVAL FORCE: 0.8kgf~2.0kgf.
- 3–3.DURABILITY: 10000 CYCLES.

4.ELECTRICAL PERFORMANCE,

4–1. VOLTAGE RATING:20 V DC/AC (RMS. max)
CURRENT RATING: 3 AMPS. FOR TOTAL VBUS/GND PINS;
1.25AMPS FOR CC PIN,0.25 AMPS. FOR ALL OTHER CONTACT.

4–2. LLCR:
VBUS & GND PINS AND OTHER PINS: 40mΩ/PIN MAX.
SHIELD: 50mΩ/MAX.
LLCR MAX. CHANGE OF ALL PINS: 10mΩ.

4–3.INSULATION RESISTANCE: 100MΩ MIN

4–4.DIELECTRIC WITHSTAND VOLTAGE,AC 100V FOR 1 MINUTE.

5. ENVIRONMENTAL PERFORMANCE:
OPERATING TEMPERATURE: −30°C~+80°C.

6.IR REFLOW:
THE PEAK TEMPERATURE ON THE BOARD SHALL
BE MAINTAINED FOR 10 SECONDS AT 260°C.

TOLERANCE				深圳市首韩科技有限公司			
X.X	±0.30	X.°	±10°	PART NO. TYPE-C	TITLE: TYPE-C 16P 3MD-2.0		
.XX	±0.20	.X°	± 8°				
.XXX	±0.10	.XX°	± 5°	DESIGN: 李春风	DRAWG NO. DRAW_NO.		
UNITS	mm						
MATERILA				CHED: 钟华华	SCALE	SHEET	REV.
FINISH				APPD: 罗孝金	SCALE	SHEET	REV

深圳市首韩科技有限公司

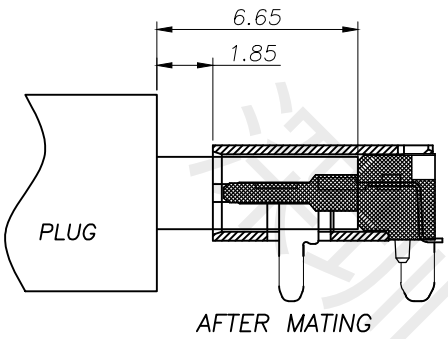

USB TYPE-C PIN ASSIGNMENTS

PIN NUMBER	SIGNAL NAME
A1	GND
A4	VBUS
A5	CC1
A6	Dp1
A7	Dn1
A8	SBU1
A9	VBUS
A12	GND

PIN NUMBER	SIGNAL NAME
B12	GND
B9	VBUS
B8	SBU2
B7	Dn2
B6	Dp2
B5	CC2
B4	VBUS
B1	GND

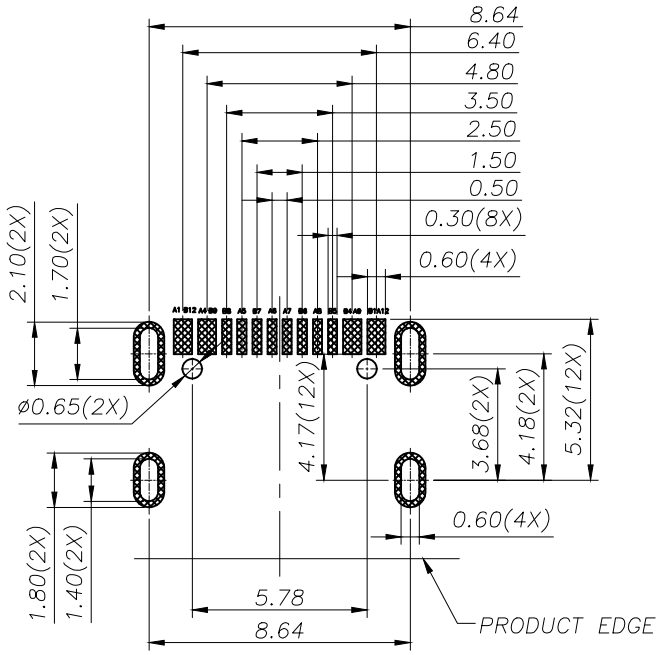

RECOMMENDED PCB LAYOUT(TOP VIEW)

THICKNESS 1.60 MM;DEFAULT TOLERANCE:±0.05

深圳市首韩科技有限公司

TOLERANCE			
X.X ±0.30	X.° ±10°	深圳市首韩科技有限公司	
.XX ±0.20	.X° ± 8°	PART NO. TYPE-C	TITLE: TTYPE-C 16P 3MD-2.0
.XXX ±0.10	.XX° ± 5°	DESIGN: 李春风	DRAWG NO. DRAW_NO.
UNITS	mm	CHED: 钟华华	SCALE / SHEET / REV.
MATERILA		APPD: 罗孝金	SCALE / SHEET / REV
FINISH			

深圳市首韩科技有限公司
SHENZHEN SHOUHAN TECHNOLOGYCO.,LTD
Tel: 0755-27597601 Fax: 0755-27597491

承 认 书

SPECIFICATION FOR APPROVAL

产 品 编 码
Material code:

产品名称 Project: TYPE-C

规格型号 Part No: TYPE-C 16P 3MD-2.0

贵公司承认印 Approval signatures

料 号/Part No.	签 章/Signatures

日期 Date:

拟制/Drawn	李春风	深圳市首韩科技有限公司 工程专用章
审核/Check	钟华华	
批准/Approved	罗孝金	

深圳市首韩科技有限公司

RATING（额定值）	20V 3.0A
PRACTICAL TEMPERATURE RANGE 使用温度范围	-30℃~80℃ 在-30℃~80℃温度内使用
STANDARD ATMOSPHEIC CONDITIONS 测试标准状度	UNLESS OTHERWISE SPECIFIED THE STANDARD RANGE OF ATMOSPHERIC CONDITIONS FOR MAKING MEASUREMENTS AND TESTS ARE AS FOLLOWS: (1) BETWEEN BODY AND CONDUCTOR: 5。C TO 35℃ (2) BETWEEN CONDUCTORS NOT TO BE CONTACT：45% TO 85% (3) PRESSURE：86Kpa TO 106Kpa 在没有指定的情况下测试温度、湿度、气压如下： (1) 温度为 5℃~35℃ (2) 湿度为 45%~85% (3) 气压为 86 Kpa~106Kpa

MECHANICAL（机械性能）

ITEM 项目		TEST CONDITIONS 测试条件	PERFORMANCE 规格
1	CONNECTION FORCE 插入力度	MEASUREMENT SHALL BE MADE AFTER CONNECTING AND DISCONNECTING USING STANDARD PLUG GAUGE 3 TIMES。 依据标准的 PLUG GAUGE 做第 3 次拔插后测定	0.5~2.0Kgf
	DISCONNECTION FORCE 拔出力度	MEASUREMENT SHALL BE MADE AFTER CONNECTING AND DISCONNECTING USING STANDARD PLUG GAUGE 3 TIMES。 依据标准的 PLUG GAUGE 做第 3 次拔插后测定	0.8~2.0Kgf
2	TERMINAL STRENGTH 端子强度	A STATIC LOAD OF 0.1N/m(1kgf/cm)SHALL BE APPLIED TO THE TIP OF THE TERMINAL FOR 1 MIN IN ANY DIRECTION 向排脚先端的任意一个方向加 1 分钟 0.1N/m(1kgf/cm)的力度.	THERE SHALL BE NO DAMAGE TO THE TERMINAL SUCH AS CRACKS, LOOSENESS OR PLAY ELECTRICAL ,AND MECHANICAL CHARACTERISTICS SHALL BE SATISFIED 在排脚中没有裂开、松动等异常， 满足于机械、电气性能

ELECTRICAL（电气性能）

ITEM 项目		TEST CONDITIONS 测试条件	PERFORMANCE 规格
3.1	CONTACT RESISTANCE 接触电阻	MEASURED AT SMALL CURRENT （100mA OR LESS） 1000Hz 在微小电流（100 m A）以下测试	50mΩ MAX
3.2	INSULATION RESISTANCE 绝缘电阻	APPLY A VOLTAGE OF 100V DC FOR 1 MIN TO FOLLOWING PORTIONS AFTER WHICH MEASUREMENT SHALL BE MADE: (1) BETWEEN BODY AND CONDUCTOR (2) BETWEEN CONDUCTORS NOT TO BE CONTACT (3) BETWEEN CONDUCTORS NOT TO BE WHEN PLUG IS INSERTED DC100V 1 MIN 输入 100V DC 电压 1 分钟，按以下接触方法测试： （1） 插座体与排脚之间 （2） 不接触的排脚之间 （3） 插头插入时不接触排脚之间	100MΩ MIN

深圳市首韩科技有限公司

3.3	DIELECTRIC STRENGTH 耐电压	AC 100V ims(50~60Hz)FOR 1 MIN TRIP CURRENT:0.5mA (1) BETWEEN BODY AND CONDUCTOR (2) BETWEEN CONDUCTORS NOT TO BE CONTACL (3) BETWEEN CONDUCTORS NOT TO BE WHEN PLUG IS INSERTED DC 100V 1 MIN 输入 AC 100V （50Hz）/min 电压 1 分钟感度电流为 0.5mA,按以下接触方法测试: (1) 插座体与排脚之间 (2) 不接触的排脚之间 (3) 插头插入时不接触排脚之间	WITHOUT DAMAGE TO PARTS ARCING OR BREAKDOWN ETC 没有绝缘破坏等异常
URABILITY（耐久性）			
ITEM 项目		TEST CONDITIONS 测试条件	PERFORMANCE 规格
4．1	SOLDERA-BILITY TEST 可焊性试验	THE TOP OF THE TERMINALS SHALL BE DIPPED 1mm IN THE SOLDER BATH OF 250±5℃ FOR 5±0.5 SECONDS 端子顶部被浸入锡池中 1mm 深,温度为 250±5℃,时间为 5±0.5 秒	（1）SOLDER WETTING TIME SHALL BE 3 SEC OR LESS 焊接时间应少于 3 秒 （2）THE AREA OF SOLDERING SHOULD BE OVER 75% 焊接面积应有 75%以上
4.2	RESISTANCE TO SOLDERING HEAT TEST 耐焊性试验	REFLOW SOLDERING CONDITIONS: PREHEAT:TEMPERATURE ON THE COPPER FOIL SURFACE SHOULD REACH 180℃.120S AFTER THE P.C.B ENTERED INTO THE SOLDERING EQUIPMENT. TALLEST TEMPERATURE:TEMPERATURE ON THE COPPER FOIL SURFACE SHOULD REACH THE PEAK TEMPERATURE OF 260±5℃WITH IN 20 SECONDS. 过回流焊条件: 预热: 电镀层表面的温度应达到 180℃,120s 后电路板进入回流焊设备。 最高温度: 电镀层表面温度最高为 260±5℃且停留不超过 20 秒。 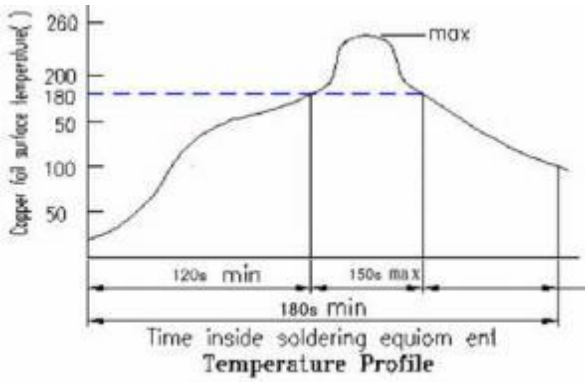 Temperature Profile	WITHOUT DEFOR MATION OF CASE OR EXCESSIVE LOOSENESS OF TEMINALS ELECTRICAL CHARACTERISTICS SHALL BE SATISFIED 本体无变形，满足于机械、电气性能

深圳市首韩科技有限公司

4．2	RESISTANCE TO SOLDERING HEAT TEST 耐焊性试验	SOLDERING IRON METHOD: BIT TEMPERATURE 330±5℃ APPLICATION TIME OF SOLDERING IRON3±0.5 SEC HOWEVER EXCESSIVE PRESSURE SHALL NOT BE APPLIED TO THE TERMINAL 手焊接的时候温度需控制在 330±5℃ ，时间为 3±0.5 秒，但不能在排脚上施加异常压力。	WITHOUT DEFORMATION OF CASE OR EXCESSIVE LOOSENESS OF TEMINALS ELECTRICAL CHARACTERISTICS SHALL BE SATISFIED 本体无变形，满足于机械、电气性能
4．3	HUMIDITY TEST 潮湿试验	THE JACK SHALL BE STORED ATA TEMPERATURE OF 40±2℃ AND A HUMIDITY OF 90%TO 96% FOR 96 Hr,THEN THE JACK SHALL BE MAINTAINED AT STANDARD ATMOSPHERIC CONDITION FOR 1 Hr FOR OTHER PROCEDURES 放置 40±2℃ 的相应湿度为 90~96% Hr 环境中 96 小时后，再将样板放在正常环境中 1 小时后进行测试	THERE SHALL BE NO DAMAGE ON APPEARANCE。 MECHANICAL AND ELECTRICAL CHARACTERISTICS SHALL BE SATISFIED 外观无异常，满足于机械、电气性能。
4.4	HEAT TEST 耐热试验	THE JACK SHALL BE STORED ATA TEMPERATURE OF70±2℃ FOR 96 HOURS，AND THEN IT SHALL BE SUBJECTED TO THE CONTROLLED RECOVERY MBASURBM 放置在温度 70±2℃中测试 96 小时后， 再放置正常室温中 1 小时来测定	
4．5	COLD TEST 耐寒试验	THE JACK SHALL BE STORED ATA TEMPERATURE OF-25±3℃ FOR 96 HOURS AND THEN IT SHALL BE SUBJECTED TO THE CONTROLLED RECOVERY CONDITIONS FOR 1 HOUR AFTER WHICH 放置在温度-25±3℃中 96 小时后，再放置常温常湿中 1 小时来测定	THERE SHALL BE NO DAMAGE ON APPEARANCE MECHANICAL AND ELECTRICAL CHARACTERISTICS SHALL BE SATISFIED 外观无异常，满足于机械、电气性能
4．6	LIFE TEST 寿命试验	WITHOUT LOAD CONNECTION AND DISCONNECTION SHALL BE MADE WITH THE MATING PLUGS AND JACKS FOR 10000 CYCLES AT A SPEED OF 10 TO 25 CYCLES/MIN 无负荷 将结合了的标准Plug(尽量要近于中心的)在1分钟内以10-25的速度，进行10000次插入，拔出 LOAD： AT RATING CONDITION （NON-INDUCTIVE LOAD） CONNECTION AND DISCONNECTION SHALL BE MADE 10000 CYCLES AT A SPEED 10 TO 20 CYCLES / MIN 负荷 以定格状态(无诱导负荷)在1 分钟内以10-20次的速度进行 10000次插入、拔出	（1） CONTACT RESISTANCE SHALL BE ≤ 0.1Ω （2） DISCONNECTION FORCE SHALL BE 0.8 TO 2.0N （3） MECHANICAL AND ELECTRICAL CHARACTERISTICS SHALL BE SATISFIED (1) 接触电阻≤0.1Ω (2) 拔出力是 0.8~2.0N (3) 其它:满足于机械,、电气性能

深圳市首韩科技有限公司

4.7	TEMPARATURE CYCLINGTEST 温度循环测试	THE JACK SHALL BE SUB JECTED TO 5 CYCLES OF THE FOLLOWING CONDITIONS SHOWED IN THE FIGURE,AND THEN SHALL RETURNED ALLOWED TO REMAIN IN ROOM AMBIENT CONDITION FOR 30 MINUTES 将插座以下列条件作 5 个循环， 然后放回室内环境 30 分钟 Temp(℃) 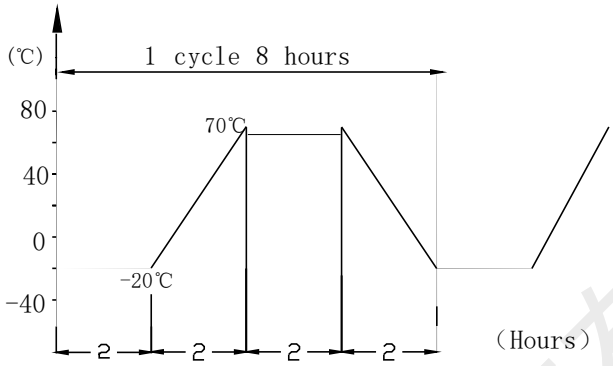 	THERE SHALL BE NO DEFORMATION OR CRACKS IN MOLDED PART. INSERTION & EXTRACTION FORCE:3 TO 20N CONTACT RESISTANCE:MAX.30M Ω INSULATION RESISTANCE: MIN.100 M Ω DIELECTRIC WITHSTANDING VOLTAGE: 100VAC/MIN(BETWEEN TERMINALS) 产品不能变形与破裂 插拔力： 3N 至 20N 接触电阻：最大 30m Ω 绝缘电阻：最小 100 M Ω 绝缘耐压：最小 100VAC（端子之间）
4.8	COLD&HEAT SHOCK TEST 冷热冲击测试	THE JACK SHALL BE SUBJECTED TO5 CYCLES OF THE FOLLOWING CONDITIONS SHOWED IN THE FIGURE,AND THEN SHALL RETURNED AND ALLOWED TO REMAIN IN ROOM AMBIENT CONDITION FOR 30MINUTES将插座以下列条件作5个循环，然后放回室内环境30分钟TEMP (℃) 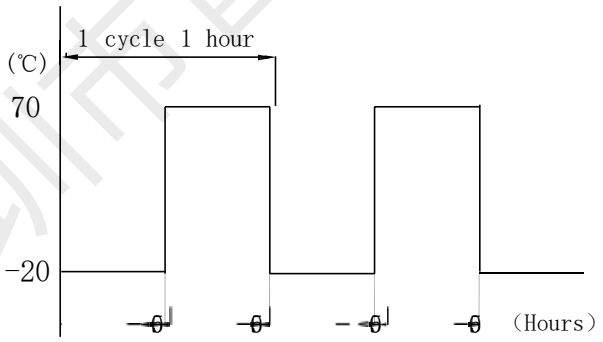 	THERE SHALL BE NO DEFORMATION OR CRACKS IN MOLDED PART. INSERTION & EXTRACTION FORCE:3 TO 25N CONTACT RESISTANCE:MAX.30M Ω INSULATION RESISTANCE: MIN.100 M Ω DIELECTRIC WITHSTANDING VOLTAGE: 500VAC/MIN(BETWEEN TERMINALS) 产品不能变形与破裂 插拔力： 3N 至 25N 接触电阻：最大 30m Ω 绝缘电阻：最小 100 M Ω 绝缘耐压：最小 500VAC（端子之间）

深圳市首韩科技有限公司