1. Description

The NTF2955T1G(ES) is P-Channel enhancement MOS Field Effect Transistor. Uses advanced trench technology and design to provide excellent $R_{DS(ON)}$ with low gate charge. Device is suitable for use in DC-DC conversion, power switch and charging circuit. Standard Product NTF2955T1G(ES) is Pb-free.

2. Features

- -60V, $R_{DS(ON)}$=90mΩ(Typ.) @V_{GS}=-10V
  $R_{DS(ON)}$=117mΩ(Typ.) @V_{GS}=-4.5V
- Fast Switching
- High density cell design for low $R_{DS(on)}$
- Material: Halogen free
- Reliable and rugged
- Avalanche Rated
- Low leakage current

3. Applications

- PWM applications
- Load switch
- Power management in portable/desktop PCs
- DC/DC conversion

4. Ordering Information

Part Number	Package	Marking	Material	Packing	Quantity per reel	Flammability Rating	Reel Sizes
NTF2955T1G(ES)	SOT-223	PG06R114/LOT	Halogen free	Tape & Reel	2,500 PCS	UL 94V-0	13 inches

Table-1 Ordering information

5. Pin Configuration and Functions

Pin	Function	Outline	Circuit Diagram
1	Gate	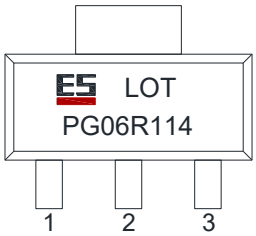	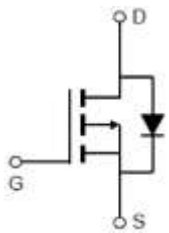
3	Source		
2	Drain		

Table-2 Pin configuration

6. Specification

Absolute Maximum Rating & Thermal Characteristics

Ratings at 25 ˚C ambient temperature unless otherwise specified.

Parameter		Symbol	Limit	Unit
Drain-Source Voltage		BV_{DSS}	-60	V
Gate-Source Voltage		V_{GS}	±20	V
Continuous Drain Current	T_A=25°C	I_D	-3.0	A
	T_A=100°C		-1.8	
Maximum Power Dissipation	T_A=25°C	P_D	1.6	W
Pulsed Drain Current		I_{DM}	-12	A
Operating Junction Temperature		T_J	-55 to +150	°C
Storage Temperature Range		T_{stg}	-55 to +150	°C

Thermal resistance ratings

Parameter	Symbol	Maximum	Unit
Junction-to-Ambient Thermal Resistance	$R_{\theta JA}$	78	°C/W

Copyright© ElecSuper Incorporated

Electrical Characteristics

At TA = 25℃ unless otherwise specified

Parameter	Symbol	Test Conditions	Min.	Typ.	Max.	Unit
OFF CHARACTERISTICS						
Drain-to-Source Breakdown Voltage	BV_{DSS}	V_{GS}=0V, I_D=-250uA	-60			V
Zero Gate Voltage Drain Current	I_{DSS}	V_{DS}=-60V, V_{GS}=0V			-1	uA
Gate-to-source Leakage Current	I_{GSS}	V_{DS}=0V, V_{GS}=±20V			±100	nA
ON CHARACTERISTICS						
Gate Threshold Voltage	$V_{GS(TH)}$	V_{GS}=V_{DS}, I_D=-250uA	-1.1	-1.8	-2.4	V
Drain-to-source On-resistance	$R_{DS(on)}$	V_{GS}=-10V, I_D=-3A		90	114	mΩ
		V_{GS}=-4.5V, I_D=-2A		117	140	
CHARGES, CAPACITANCES AND GATE RESISTANCE						
Input Capacitance	C_{ISS}	V_{GS}=0V, V_{DS} =-30V f=1MHz		315		pF
Output Capacitance	C_{OSS}			57		
Reverse Transfer Capacitance	C_{RSS}			4		
Gate Resistance	R_g	f=1MHZ		9.5		Ω
Total Gate Charge	$Q_{G(TOT)}$	V_{GS}=-10V, V_{DS}=-30V I_D=-2A		4.92		nC
Gate-to-Source Charge	Q_{GS}			0.97		
Gate-to-Drain Charge	Q_{GD}			0.72		
SWITCHING CHARACTERISTICS						
Turn-On Delay Time	$t_{d(ON)}$	V_{GS}=-10V, V_{DS}=-30V I_D=-2A, R_G=5Ω		6.8		ns
Rise Time	t_r			8		
Turn-Off Delay Time	$t_{d(OFF)}$			16		
Fall Time	t_f			4		
BODY DIODE CHARACTERISTICS						
Forward Voltage	V_{SD}	V_{GS}=0V, I_S=-3A			1.2	V

Copyright© ElecSuper Incorporated

7. Typical Characteristic

Figure 1: Output Characteristics

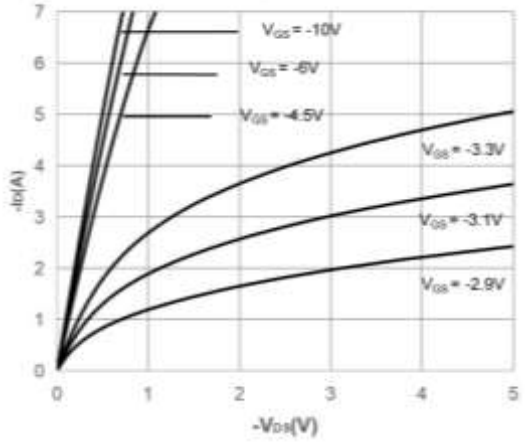

Figure 2: Typical Transfer Characteristics

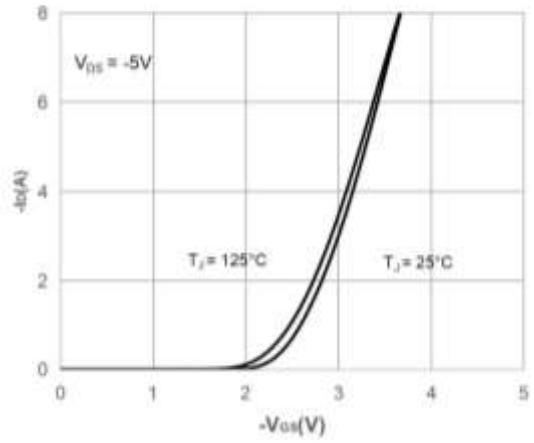

Figure 3 : On-resistance vs. Drain Current

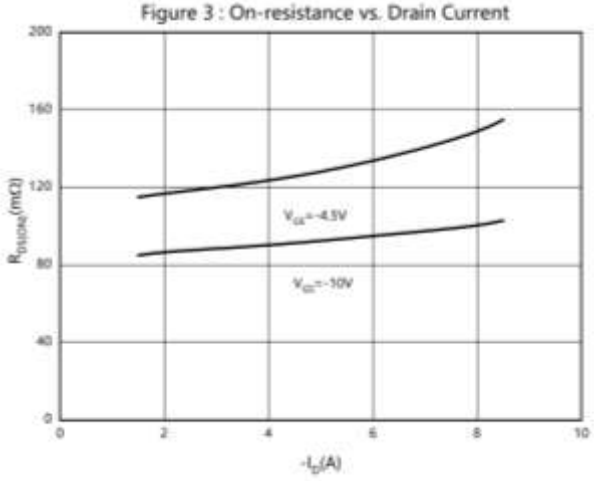

Figure 4: Body Diode Characteristics

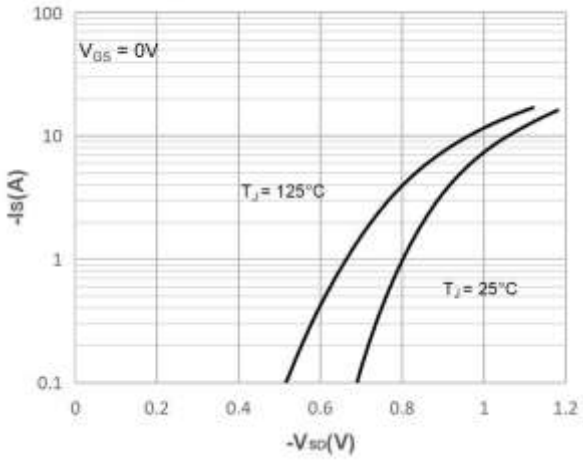

Figure 5: Capacitance Characteristics

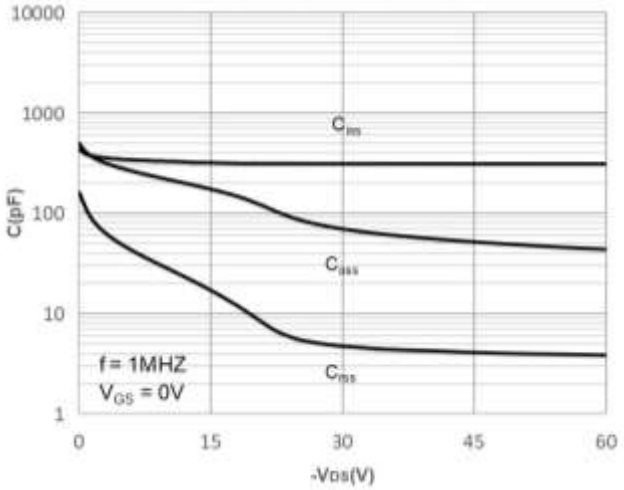

Figure 6: Normalized on Resistance vs. Junction Temperature

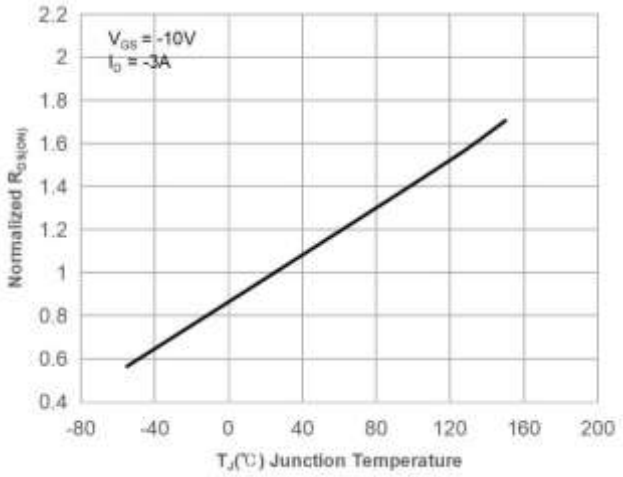

8. Dimension (SOT-223)

POD(J)

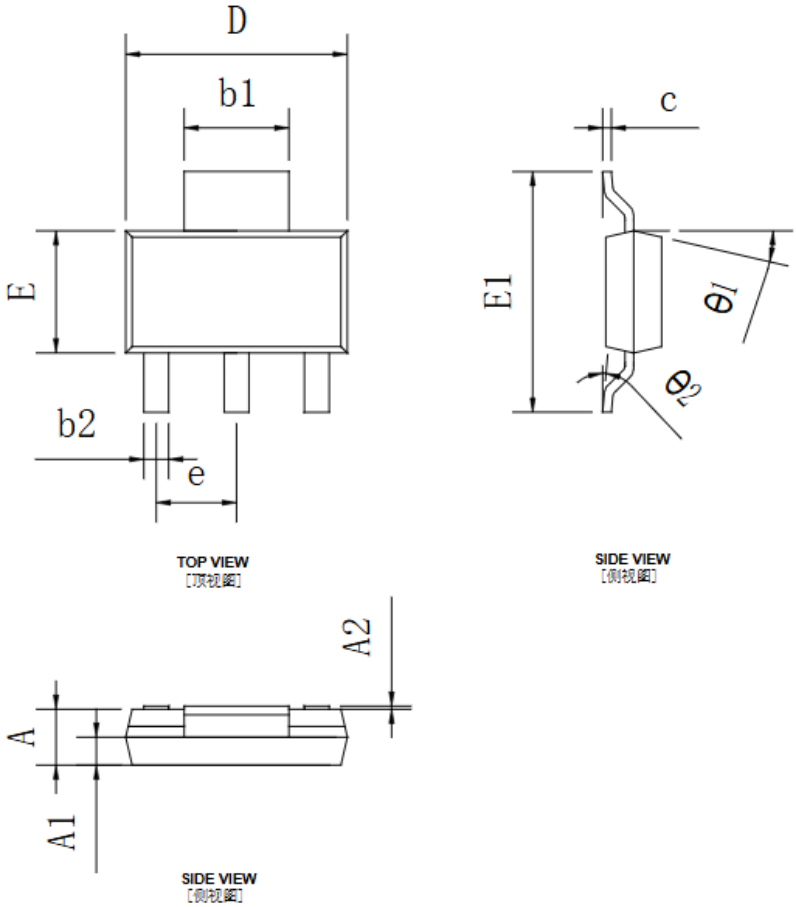

编号	尺寸（mm）		
	Min	TYP	Max
A	1.550	1.600	1.650
A1	0.770	0.800	0.830
A2	0.000	0.050	0.100
D	6.300	6.350	6.400
E	3.450	3.500	3.550
E1	6.800	6.900	7.070
b1	2.950	3.000	3.050
b2	0.660	0.710	0.760
e	2.250	2.300	2.350
c	0.200	0.250	0.300
θ1	13° TYP		
θ2	0°	--	7°

9. Recommended Soldering Footprint

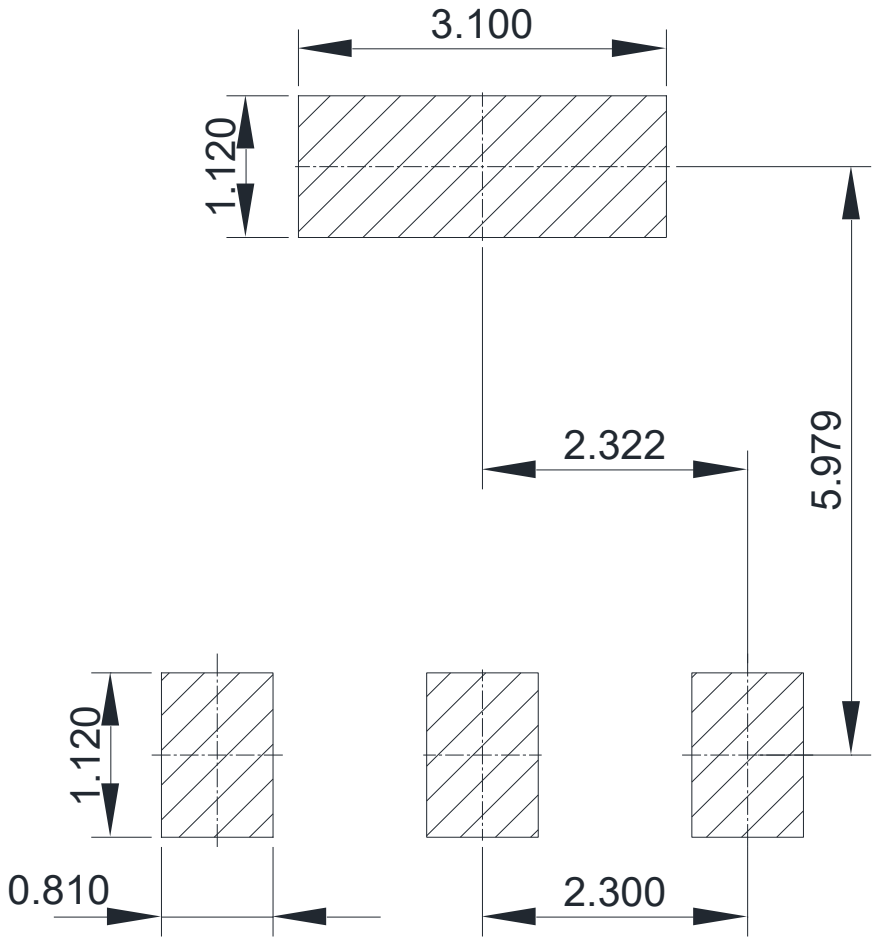

DIMENSIONS: MILLIMETERS

DISCLAIMER

ELECSUPER PROVIDES TECHNICAL AND RELIABILITY DATA (INCLUDING DATASHEETS), DESIGN RESOURCES (INCLUDING REFERENCE DESIGNS), APPLICATION OR OTHER DESIGN ADVICE, SAFETY INFORMATION, AND OTHER RESOURCES "AS IS" AND WITH ALL FAULTS, AND DISCLAIMS ALL WARRANTIES, EXPRESS AND IMPLIED, INCLUDING WITHOUT LIMITATION ANY IMPLIED WARRANTIES OF MERCHANTABILITY, FITNESS FOR A PARTICULAR PURPOSE OR NON-INFRINGEMENT OF THIRD PARTY INTELLECTUAL PROPERTY RIGHTS.

These resources are intended for skilled developers designing with ElecSuper products. You are solely responsible for
(1) selecting the appropriate ElecSuper products for your application;
(2) designing, validating and testing your application;
(3) ensuring your application meets applicable standards, and any other safety, security, or other requirements.
These resources are subject to change without notice. ElecSuper grants you permission to use these resources only for development of an application that uses the ElecSuper products described in the resource. Other reproduction and display of these resources are prohibited. No license is granted to any other ElecSuper intellectual property right or to any third party intellectual property right. ElecSuper disclaims responsibility for, and you will fully indemnify ElecSuper and its representatives against, any claims, damages, costs, losses, and liabilities arising out of your use of these resources. ElecSuper's products are provided subject to ElecSuper's Terms of Sale or other applicable terms available either on www.elecsuper.com or provided in conjunction with such ElecSuper products. ElecSuper's provision of these resources does not expand or otherwise alter ElecSuper's applicable warranties or warranty disclaimers for ElecSuper products.

Copyright© ElecSuper Incorporated