SAMZO REAC/ROHS

REV	ECN NO	DESRIPTION	DESIGN	APPROVAL	DATE
A1	NEW	Replace frame			2019.06.12

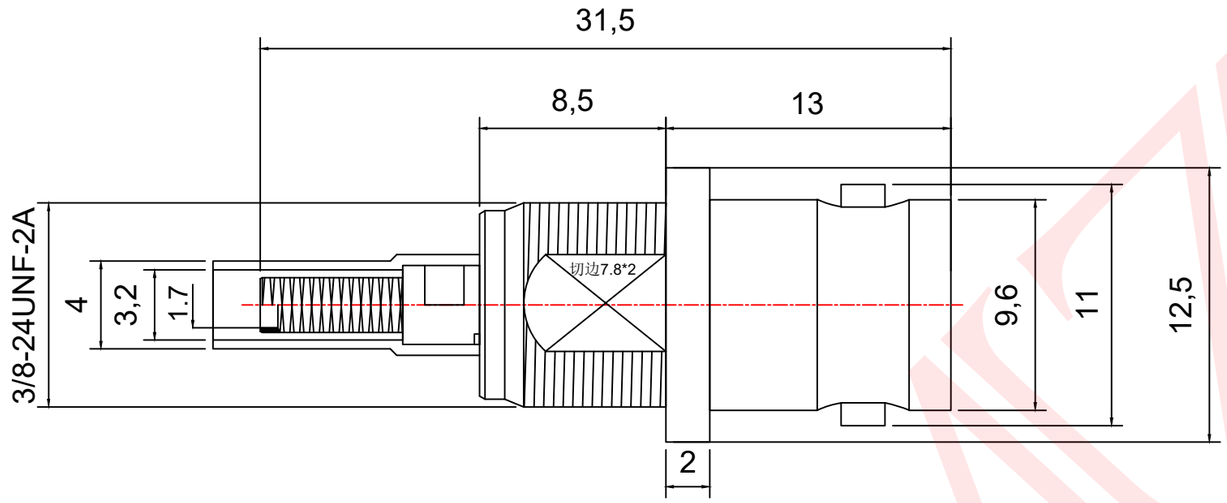

Technical Requirements

1. Frequency: 0~3 GHz
2. Impedance: 50 Ω
3. VSWR: ≤ 1.35
4. Operating Voltage: 500 V
5. Withstand Voltage: 1500 V
6. Insulation Resistance: ≥ 5000 MΩ
7. Contact Resistance: Inner conductor ≤ 1.5 mΩ
   Outer conductor ≤ 1 mΩ
8. Insertion Loss: ≤ 0.3 dB
9. Unspecified tolerances shall be ±0.2

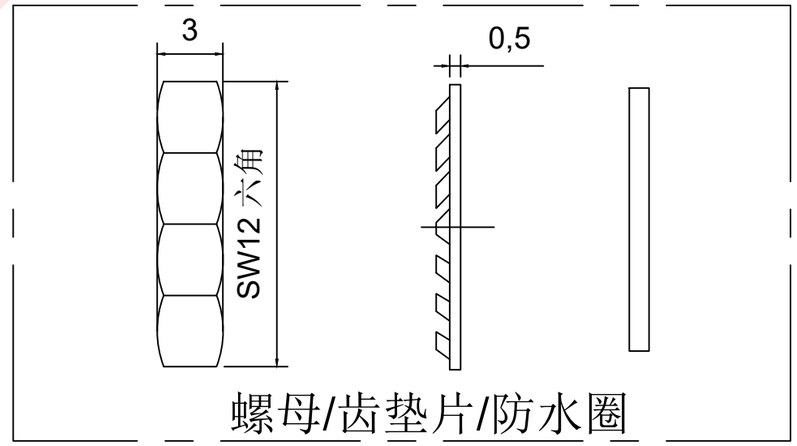

BNC-KY-315-L0-N

- Surface treatment镀层:镀镍
- Pin position脚位:180° 压接
- Length体长:31.5mm
- Product number编号:KY-1.5开窗
- Product series系列:BNC同轴射频天线座

ITEM	DESCRIPTION	MATERIAL	QTY	FINSH/COLOR
C	插孔	HPB59-1	1	------
B	绝缘体	聚四氟乙烯	1	------
A	主体	黄铜	1	镀镍

DESIGN	WANGGUIFA	2018.06.12	GENERAL TOLERANCE		
CHECKED	ZHENGUILAN	2018.06.12	≥0~2<	±0.15	
APPROVED	LILIANJIANG	2018.06.14	≥2~5<	±0.25	
			≥0~2<	±0.15	
			≥5	±0.35	

FIRST VIEW

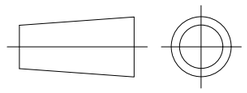

SCALE	1:1	UNIT	mm

The copyright belongs to samzo parts [China] Co., Ltd. please use the material after samzo parts agree to authorize. The final right of interpretation belongs to samzo parts.
WWW.SANCNN.COM

SAMZO COMPONENTS
Electronic switch and connector manufacturer

TITLE: 铜BNC-KY-1.5开窗BNC 母座母头冷压接线RG316
DWG NO: BNC315-P001
PART NO: BNC315-04710
MODEL NO: BNC-KY-315-L0-N
NAME: BNC COAXIAL RF CONNECTOR