1. Features

- Small Surface Mounting Type
- Ideal for Automated Placement
- Ultrafast Reverse Recovery Time
- Low Power Losses, High Efficiency
- Low Forward Voltage Drop
- RoHS Compliant

2. Mechanical Data

- Package: DFN1006-2L
- Lead Finish: Matte Tin
- Case Material: “Green” Molding Compound.
- UL Flammability Classification Rating 94V-0
- Moisture Sensitivity: Level 3 per J-STD-020
- Tape Reel :10000pcs

3. Applications

- High speed switch for detection
- For portable equipment:(Mobile phone, MP3, MD, CD-ROM, DVD-ROM, Note book PC, etc.)

4. Packing and Circuit

Packing	Patterns	Circuit
DFN1006-2L		

5. Specification

Absolute Maximum Rating & Electrical Characteristics

Electrical Characteristics (T=25ºC, RH=45%-75%, unless otherwise noted)

Parameter	Symbol	Conditions	Min.	Typ.	Max.	Unit
Reverse Break Voltage	VR	IR=100uA	40			V
Forward Voltage	VF	IF=10mA			0.325	V
		IF=200mA			0.500	V
Reverse Leakage Current	IR	VR=10V			30	uA

Absolute Maximum Ratings (T=25ºC, RH=45%-75%, unless otherwise noted)

Parameter	Symbol	Limit	Unit
Reverse Repetitive Maximum Voltage	VRM	40	V
Reverse Voltage (DC)	VR	40	V
RMS reverse Voltage	VR(RMS)	32	V
Average Rectified Output Current	IO	0.2	A
Non-repetitive Peak Forward Surge Current @t=8.3ms	IFSM	1	A
Power Dissipation	PD	100	mW
Thermal Resistance Junction to Ambient (Typ)	RθJA	120	˚C/W
Junction Temperature	TJ	-55 to +125	˚C
Storage Temperature	Tstg	-55 to +150	˚C

Copyright© ElecSuper Incorporated

6. Dimension (DFN1006-2L)

POD (A)

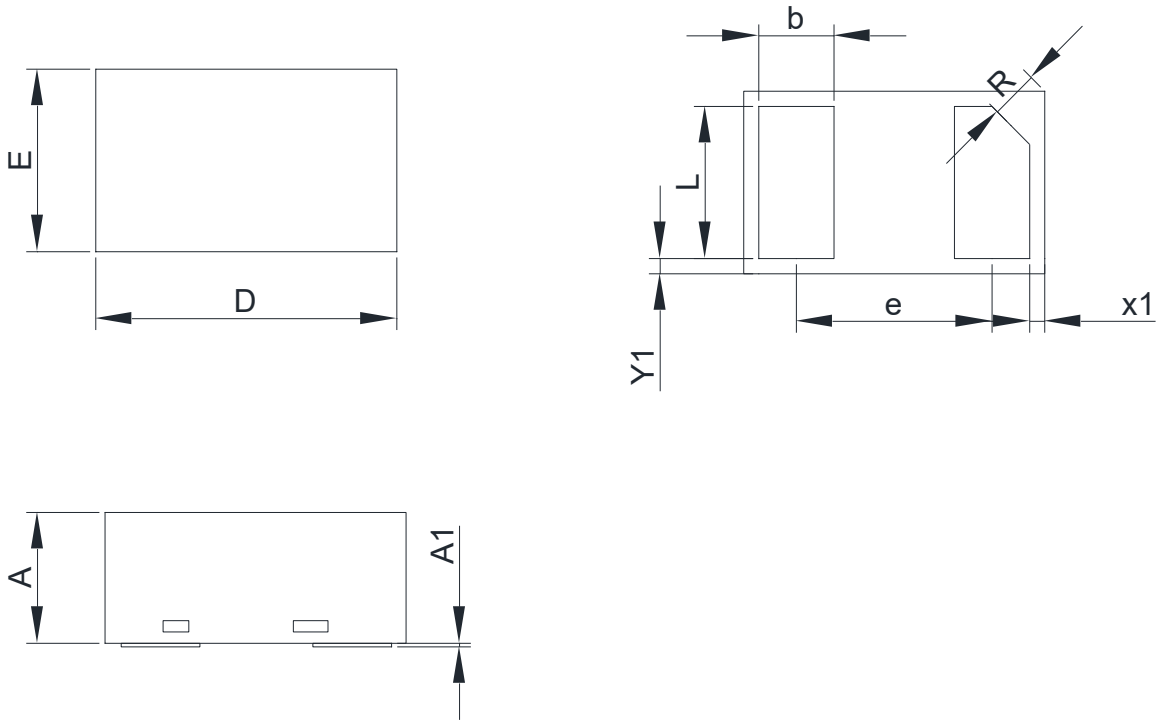

Units in millimeters

Symbol	Min.	Nom.	Max.	Symbol	Min.	Nom.	Max.
A	0.45	0.50	0.55	R	0.07	0.10	0.13
D	0.95	1.00	1.05	X1	0.025		0.065
E	0.55	0.60	0.65	Y1	0.025		0.065
b	0.20	0.25	0.30	A1	0		0.015
L	0.45	0.50	0.55				
e	0.65						

Copyright© ElecSuper Incorporated

7. Recommended Soldering Footprint

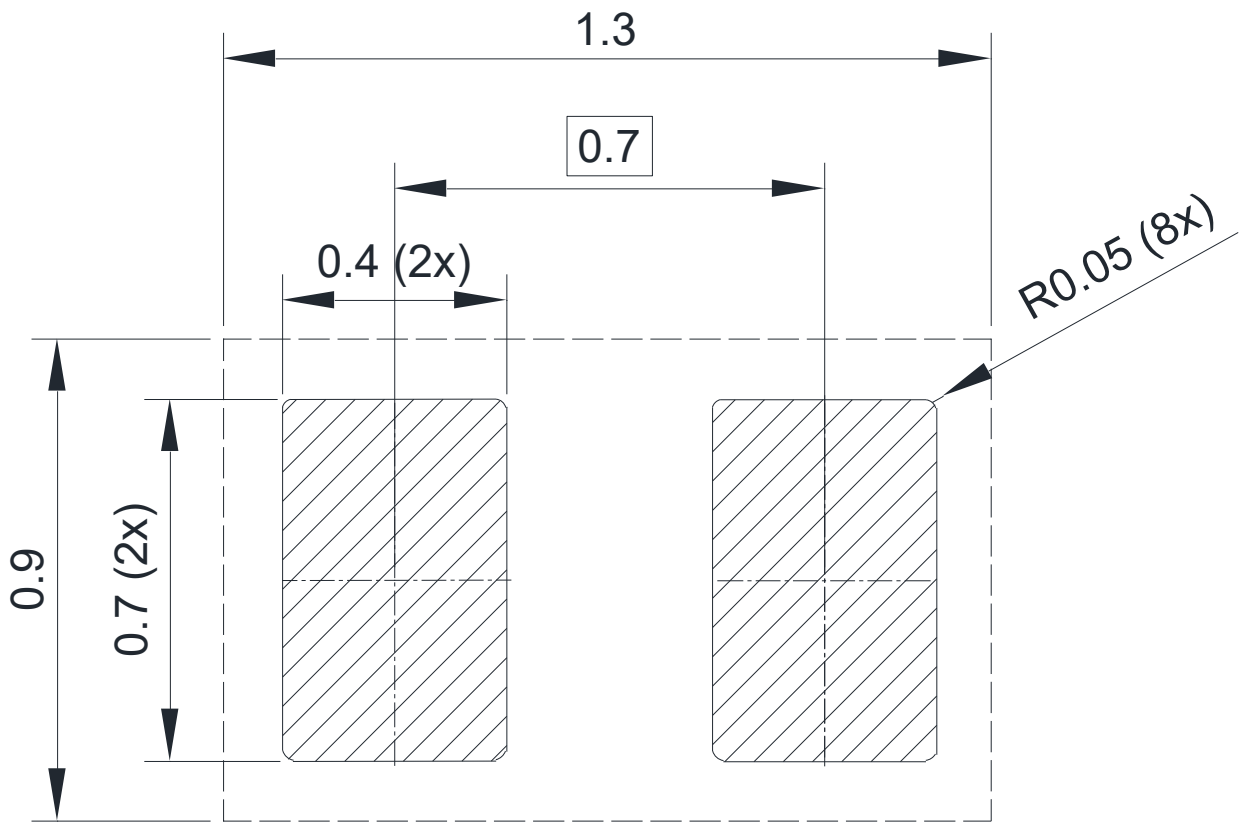

DIMENSIONS: MILLIMETERS

DISCLAIMER

ELECSUPER PROVIDES TECHNICAL AND RELIABILITY DATA (INCLUDING DATASHEETS), DESIGN RESOURCES (INCLUDING REFERENCE DESIGNS), APPLICATION OR OTHER DESIGN ADVICE, SAFETY INFORMATION, AND OTHER RESOURCES “AS IS” AND WITH ALL FAULTS, AND DISCLAIMS ALL WARRANTIES, EXPRESS AND IMPLIED, INCLUDING WITHOUT LIMITATION ANY IMPLIED WARRANTIES OF MERCHANTABILITY, FITNESS FOR A PARTICULAR PURPOSE OR NON-INFRINGEMENT OF THIRD PARTY INTELLECTUAL PROPERTY RIGHTS.

These resources are intended for skilled developers designing with ElecSuper products. You are solely responsible for
(1) selecting the appropriate ElecSuper products for your application;
(2) designing, validating and testing your application;
(3) ensuring your application meets applicable standards, and any other safety, security, or other requirements.
These resources are subject to change without notice. ElecSuper grants you permission to use these resources only for development of an application that uses the ElecSuper products described in the resource. Other reproduction and display of these resources are prohibited. No license is granted to any other ElecSuper intellectual property right or to any third party intellectual property right. ElecSuper disclaims responsibility for, and you will fully indemnify ElecSuper and its representatives against, any claims, damages, costs, losses, and liabilities arising out of your use of these resources. ElecSuper’s products are provided subject to ElecSuper’s Terms of Sale or other applicable terms available either on www.elecsuper.com or provided in conjunction with such ElecSuper products. ElecSuper’s provision of these resources does not expand or otherwise alter ElecSuper’s applicable warranties or warranty disclaimers for ElecSuper products.

Copyright© ElecSuper Incorporated