MSKSEMI 美森科
SEMICONDUCTOR

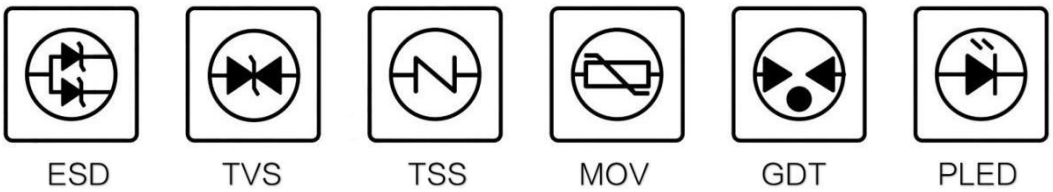

74HC164D(MS)

产品规格手册

产品简介

74HC164D(MS) 是一款采用高速 CMOS 工艺技术设计的两线输入的 8 位移位寄存器。寄存器由主从 D 型触发 器构成，它具有很高的抗噪性和抗干扰性。在时钟 CLOCK 上升沿到来时 8 位二进制数据（Qa～Qg）向右移一位。带有一个清 0 输入端，可以轻松实现输出数据的清零。该移位寄存器也可根据需要实现多级芯片扩展输出。

产品用途

- 8 位移位寄存器
- 自动化工程控制
- 其它应用领域

产品特点

- 低输入电流：≤1uA
- 传播延迟时间：典型值 20ns
- 低静态功耗：Icc≤5.0μA,@ VCC=6V
- 复合使能输入，可轻松实现多级扩展
- 宽工作电压范围：2.0V to 6.0V
- 封装形式：SOP14

封装形式和管脚功能定义

封装图	脚位信息
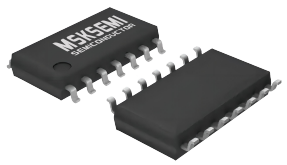	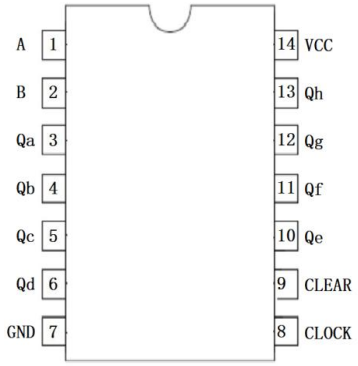
SOP-14	

管脚序号	管脚定义	功能说明
1	A	数据输入端
2	B	数据输入端
3～6	Qa～Qd	Qa～Qd 数据输出端
7	GND	电源地
8	CLEAR	清 0 端，低电平有效
9	CLOCK	时钟控制端，上升沿有效
10～13	Qe～Qh	Qe～Qh 数据输出端
14	VCC	电源正

真值表

Inputs				Outputs			
Clear	Clock	A	B	Q_A	Q_B	...	Q_H
L	X	X	X	L	L		L
H	L	X	X	Q_{AO}	Q_{BO}		Q_{HO}
H	↑	H	H	H	Q_{An}		Q_{Gn}
H	↑	L	X	L	Q_{An}		Q_{Gn}
H	↑	X	L	L	Q_{An}		Q_{Gn}

注：

Q_A=AB

H 表示高电平；

L 表示低电平；

× 表示任意状态。

↑ 表示上升沿有效

Q_{AO}--Q_{HO} 表示保持原有状态

Q_{An}—Q_{Gn} 表示原有状态向右移位

Copyright© Msksemi Incorporated

极限参数

参数	符号	极限值	单位
电源电压	V_{CC}	-0.5 to 6.5	V
输入/输出电压	V_{IN}、V_{OUT}	-0.5 to V_{CC}+0.5	V
输入/输出钳位电流	I_{IK}、I_{OK}	±20	mA
单个管脚输出电流	I_{OUT}	±25	mA
单个管脚接 VCC 或 GND 电流	I_{CC}	±50	mA
耗散功率	P_D	500	mW
工作温度	T_A	0-70	℃
存储温度	T_S	-65-150	℃
引脚焊接温度	T_W	260,10s	℃

注:极限参数是指无论在任何条件下都不能超过的极限值。一旦超过此极限值,将有可能造成产品劣化等物理性损伤;同时在接近极限参数下，不能保证芯片可以正常工作。

原理逻辑图

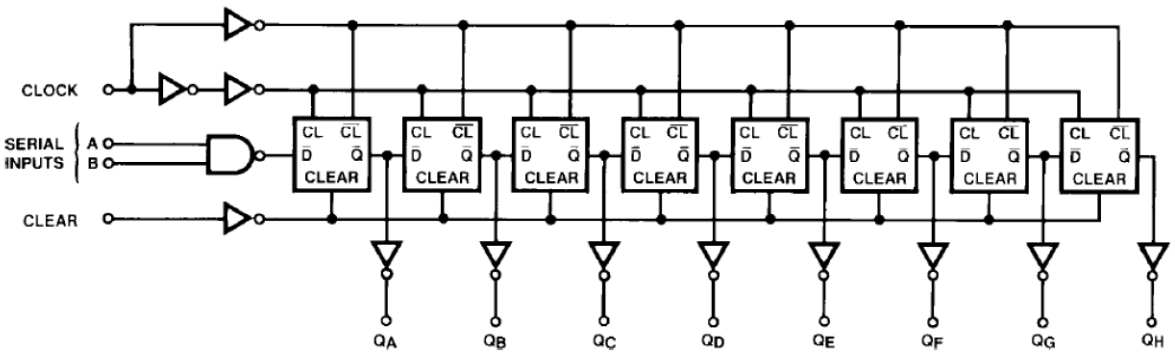

工作条件

项目	符号		最小值	典型值	最大值	单位
工作电压	V_{CC}		2	5	6	V
输入输出电压	V_{IN}、Vout		0	-	VCC	V
输入上升/下降时间	t_r t_f	VCC=2.0V	0	-	1000	ns
		VCC=4.5V	0	-	500	ns
		VCC=6.0V	0	-	400	ns

Copyright© Msksemi Incorporated

电学特性

直流电学特性： T_A=25℃

符号	项目	测试条件		VCC(V)	最小值	典型值	最大值	单位
V_{IH}	高电平有效输入电压			2.0	1.5	-	-	V
				4.5	3.15	-	-	V
				6.0	4.2	-	-	V
V_{IL}	低电平有效输入电压			2.0	-	-	0.5	V
				4.5	-	-	1.35	V
				6.0	-	-	1.8	V
V_{OH}	高电平输出电压	V_I= V_{IH} or V_{IL}	I_{OH}=20μA	2.0	1.9	-	-	V
				4.5	4.4	-	-	V
				6.0	5.9	-	-	V
			I_{OH}=4.0mA	4.5	3.9	4.3		V
			I_{OH}=5.2mA	6.0	5.2	5.7		V
V_{OL}	低电平输出电压	V_I= V_{IH} or V_{IL}	I_{OH}=20μA	2.0	-	-	0.1	V
				4.5	-	-	0.1	V
				6.0	-	-	0.1	V
			I_{OH}=4.0mA	4.5	-	0.2	0.5	V
			I_{OH}=5.2mA	6.0	-	0.3	0.5	V
I_{IN}	输入电流	V_I=V_{CC} or GND		6.0	-	-	1	uA
I_{CC}	工作电流	V_I=V_{CC} or GND,I_{OUT}=0μA		6.0	-	-	5	uA
V_{CC}	工作电压				2	-	6	V

交流电学特性： Ta=25℃ V_{CC}=5.0V，C_L=16pF， tr=tf≤20ns。

符号	项目	测试条件	最小值	典型值	最大值	单位
t_{PHL}	传输延迟时间	-	-	24	-	ns
t_{PLH}	Clock to Output	-	-	18	-	ns
t_{PHL}	传输延迟时间	-	-	25	-	ns
t_{PLH}	Clear to Output	-	-	17	-	ns
f_{MAX}	传输延迟时间	-	-	22	-	ns
t_{REM}	最小清除时间 Clear to Clock	-	-	5	-	ns
t_S	最小设置时间 Data to Clock	-	-	30	-	ns
t_H	最小保持时间 Clock to Data	-	-	10	-	ns
t_W	最小脉宽 Clock or Clear	-	-	18	-	ns

Copyright© Msksemi Incorporated

SOP14

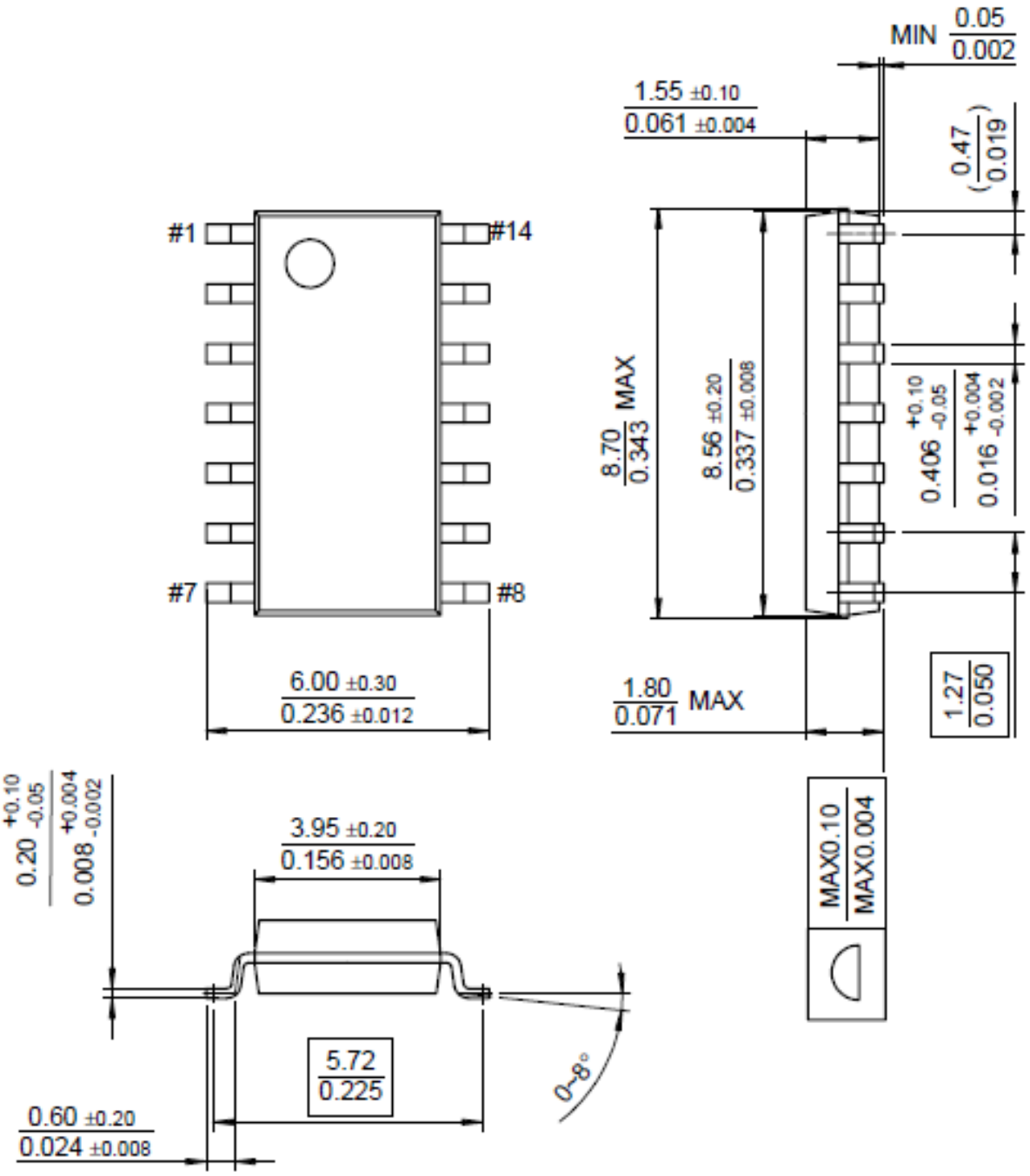

订购信息

P/N	PKG	QTY
74HC164D(MS)	SOP-14	4000

Copyright© Msksemi Incorporated

Attention

■ Any and all MSKSEMI Semiconductor products described or contained herein do not have specifications that can handle applications that require extremely high levels of reliability, such as life-support systems, aircraft's control systems, or other applications whose failure can be reasonably expected to result in serious physical and/or material damage. Consult with your MSKSEMI Semiconductor representative nearest you before using any MSKSEMI Semiconductor products described or contained herein in such applications.

■ MSKSEMI Semiconductor assumes no responsibility for equipment failures that result from using products at values that exceed, even momentarily, rated values (such as maximum ratings, operating condition ranges, or other parameters) listed in products specificationsof any andall MSKSEMI Semiconductor products described orcontained herein.

■ Specifications of any and all MSKSEMI Semiconductor products described or contained herein stipulate the performance, characteristics, and functions of the described products in the independent state, and are not guarantees of the performance, characteristics, and functions of the described products as mounted in the customer's products or equipment. To verify symptoms and states that cannot be evaluated in an independent device, the customer should always evaluate and test devices mounted in the customer'sproducts orequipment.

■ MSKSEMI Semiconductor. strives to supply high-quality high-reliability products. However, any and all semiconductor products fail with someprobability. It is possiblethat these probabilistic failures could give rise to accidents or events that could endanger human lives, that could give rise to smoke or fire, or that could cause damage to other property. When designing equipment, adopt safety measures so that these kinds of accidents or events cannot occur. Such measures include but are not limited to protective circuits anderror prevention circuitsfor safedesign, redundant design, and structural design.

■ In the event that any or all MSKSEMI Semiconductor products(including technical data, services) described or contained herein are controlled under any of applicable local export control laws and regulations, such products must not be exported without obtaining the export license from theauthorities concerned in accordance with the above law.

■ No part of this publication may be reproduced or transmitted in any form or by any means, electronic or mechanical, including photocopying and recording, or any information storage or retrieval system, or otherwise, without the prior written permission of MSKSEMI Semiconductor.

■ Information (including circuit diagrams and circuit parameters) herein is for example only ; it is not guaranteed for volume production. MSKSEMI Semiconductor believes information herein is accurate and reliable, but no guarantees are made or implied regarding its use or any infringementsof intellectual property rights or other rightsof third parties.

■ Any and all information described or contained herein are subject to change without notice due to product/technology improvement, etc. Whendesigning equipment, referto the "Delivery Specification" for the MSKSEMI Semiconductor productthat you intend to use.

Copyright© Msksemi Incorporated