HVR1B24-02

- High Voltage Reed Relay
- Low Contact Resistance
- Breakdown up to 4 kVDC
- Excellent Lifetime Characteristics
- Custom Design Available

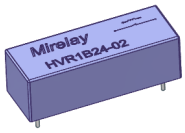

Outline Dimension

Unit: mm DIM Tolerance: ±0.3

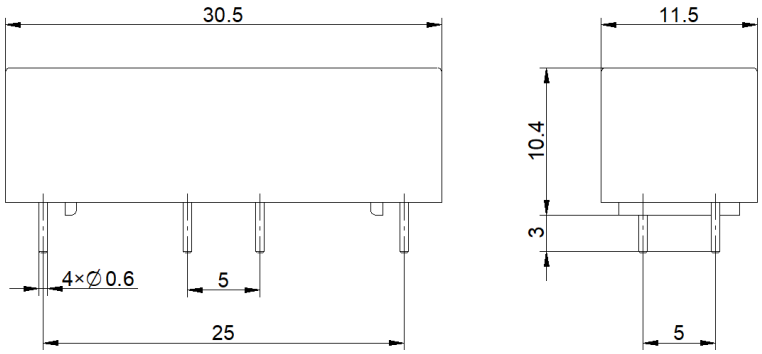

Layout [Top View]

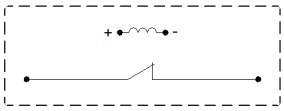

Marking

Coil Parameters (at 20℃)				
Nominal Coil Voltage	Nominal Current	Coil Resistance	Max Pull-in Voltage	Min Drop-out Voltage
24 VDC	17 mA	1400±10% Ω	18 VDC	2 VDC

Contact Parameters			
Contact Form	1 Form B	Max Contact Rating	100 W
Max Switch Voltage	1 kVDC	Max Switch Current	1.0 A
Max Carrying Current	2.5 A	Min Breakdown Voltage	4 kVDC
Max Contact Resistance	150 mΩ	Life Expectancy (Electrical) (at 500 VDC 100mA)	5×10^{7} ops

Electrical Specifications					
Dielectric Strength (Static,min)	Open contacts	4 kVDC	Insulation Resistance (min./typ.) Rh<45%, 100V Test Voltage	Open contacts	1×10^{12} Ω
	Contact to coil	7 kVDC		Contact to coil	1×10^{12} Ω
Operate Time,incl.Bounce		1.0 ms	Capacitance	Across Open Switch	0.5 pF
Reset Time		0.25 ms			

Environmental data			
Vibration (10 to 2KHz 1.5mm)	20 G	Shock (1/2 sine wave duration 11ms)	50 G
Operating Temperature	-20℃ ～ 70℃	Storage Temperature	-35℃ ～ 105℃
Soldering Temperature (5 sec. dwell)	260℃	Washability	fully sealed

Example of order marking						
Product model	Contact form	Nominal Coil Voltage		Pin Out		Special code
HVR	1B：1 Form B	24：24 VDC	—	02		Nil

Remark:				
RoHS	Make	Li Linmao	TITLE High Voltage Reed Relay	
	Checke	Hu Shu		
	Approved	Dong Hu	P/N HVR1B24-02	Version: 04
	Date	8th,Jan,2025		Page: 1/1