Kinghelm®

深圳市金航标电子有限公司

SHENZHEN KINGHELM ELECTRON CO.,LTD.

产品规格书

SPECIFICATION

OF PRODUCTS

料号：KH-GPS121204-WY-KR

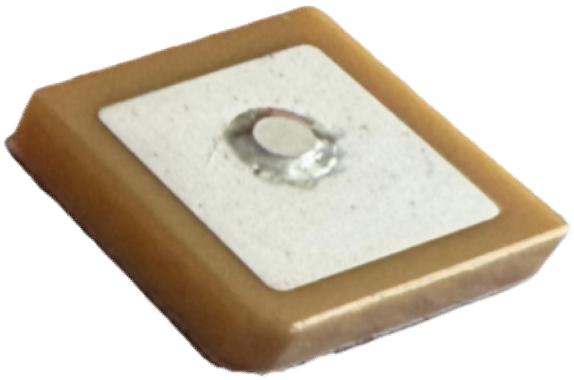

图片仅供参考，请以实物为准

1 范围 / SCOPE

本规格书适用于 **GNSS 定位陶瓷天线**（无源/有源），规定其电气、结构及包装要求，作为供需双方通用技术依据。不适用于非定位天线、定制特殊款及配套辅件。

This specification applies to **GNSS ceramic positioning antennas** (passive/active). It specifies the electrical, mechanical structure and packaging requirements, and serves as the general technical basis for both the supplier and the buyer. It is not applicable to non-positioning antennas, custom special models and supporting accessories.

2 产品概述 / General Description

本产品为陶瓷介质 GNSS 定位天线，具备体积小、频率稳定性高、右旋圆极化特性，适用于车载导航、物联网终端、定位追踪器、智能穿戴、工业设备等定位授时场景。

This product is ceramic dielectric GNSS positioning antenna with small size,high frequency stability and right-hand circular polarization,suitable for vehicle navigation,IoT terminal,tracker,wearable device and industrial positioning equipment.

3 尺寸与外观图 / OUTLINE DRAWING AND DIMENSIONS

尺寸单位：mm，未注公差 ±0.1mm；外形及引脚以附图为准，未经书面许可不得变更结构。

Unit:mm,tolerance ±0.1mm if not marked.Outline and pin layout refer to drawing;no structure change without written approval.

陶瓷类型 Ceramic Type	124
尺寸 Dimension	12*12*4
中心距 Feed Point Center Distance	0.7
馈电个数 Number of Feed Points	1
R 角 Round Corner	3R1、C1

具体公差要求详见外形图

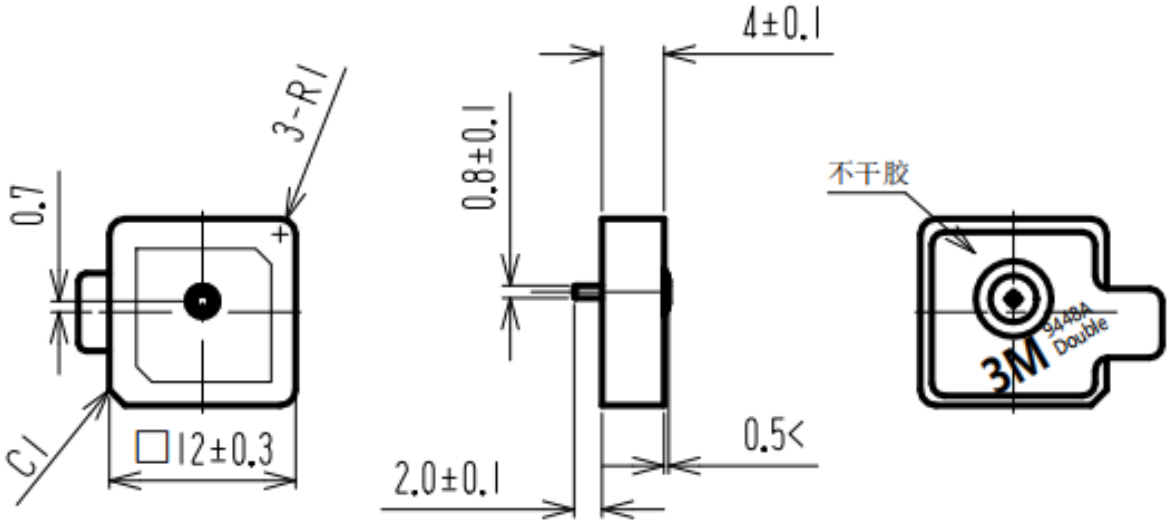

4 电气性能规格 / ELECTRICAL SPECIFICATIONS

项目 Items	规格 Specification
工作频段 Frequency Range	BDS B1、GPS L1、GLONASS L1、GALILEO E1
中心频率（Mhz） Center Frequency	1575.45、1561.098
特性阻抗 Characteristic Impedance	50Ω
驻波比 VSWR	≤2.0
极化方式 Polarization Model	RHCP 右旋圆极化
频率温度系数 Frequency Temperature Coefficient	≤-40 ppm/℃
标准测试接地板 Standard test ground plane	25×25mm

1. 中心频率以 -10dB 阻抗带宽中心点为判定基准。 Center frequency is defined as center point of -10dB impedance bandwidth
2. 天线电气性能受 PCB 接地板尺寸、净空环境、周边金属结构影响较大。天线安装区域需远离金属壳体、电池、高频强干扰电路。 Antenna performance is greatly affected by PCB ground plane size,clearance environment and surrounding metal structure. Keep antenna away from metal shell,battery and high interference circuit.