XTM4837

H-Bridge Motor Driver

XTX Technology Inc.

Tel: (+86 755) 28229862
Fax: (+86 755) 28229847

Web Site: http://www.xtxtech.com/
Technical Contact: fae@xtxtech.com

* Information furnished is believed to be accurate and reliable. However, XTX Technology Inc. assumes no responsibility for the consequences of use of such information or for any infringement of patents of other rights of third parties which may result from its use. No license is granted by implication or otherwise under any patent rights of XTX Technology Inc. Specifications mentioned in this publication are subjected to change without notice. This publication supersedes and replaces all information previously supplied. XTX Technology Inc. products are not authorized for use as critical components in life support devices or systems without express written approval of XTX Technology Inc. The XTX logo is a registered trademark of XTX Technology Inc. All other names are the property of their respective own.

18V1.5A Single Channel H-Bridge Motor Driver

GENERAL DESCRIPTION

XTM4837 is a fully integrated motor driver solution for low-voltage or battery-powered motion control applications such as cameras, smart door locks and toys. This device can drive a DC brush motor or a solenoid, or other inductive load. The XTM4837 integrates four functions of the motor forward, reverse, off and brake.

XTM4837 operates on a motor power supply voltage from 3.7V to 18V, which can supply an output current up to 1.5A continuously, 2.2A peak. The protection features include under-voltage lockout (UVLO), over current protection (OCP), and thermal shutdown (TSD).

XTM4837 has a PWM (IN1/IN2) input interface, support compatible with standard devices.

FEATURES

- Power Supply Range: 3.7V-18V
- Output Current:
  1.5A continuously, 2.2A Peak
- MOSFET On-resistance $R_{DS(ON)}$: 0.55Ω
- Auto sleep Low power mode
- Built-in Protection Circuits:
  UVLO/TSD/OCP
- Package：DFN2*2-8, ESOP8, SOP8

APPLICATIONS

- Video Security Cameras
- Robotics
- Water gas meter valve
- Smart door lock
- Battery-Powered Toys

18V1.5A Single Channel H-Bridge Motor Driver

TYPICAL APPLICATION

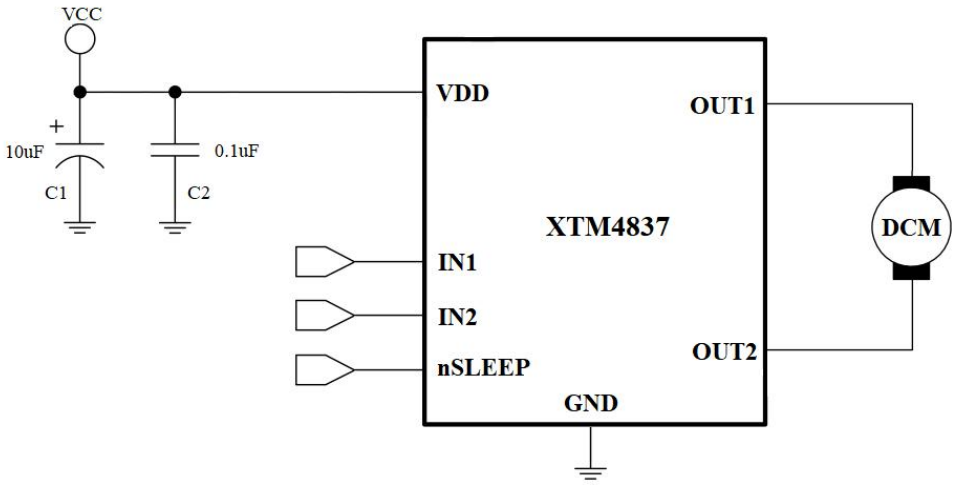

Figure 1. Schematic of Application

18V1.5A Single Channel H-Bridge Motor Driver

PIN CONFIGURATIONS

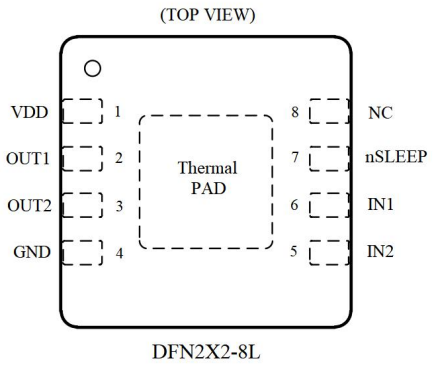

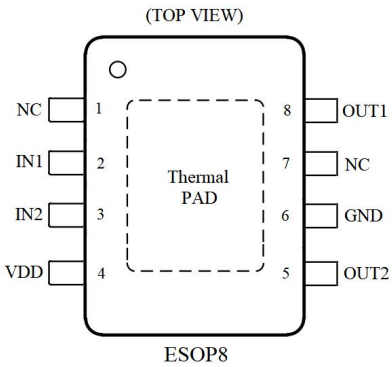

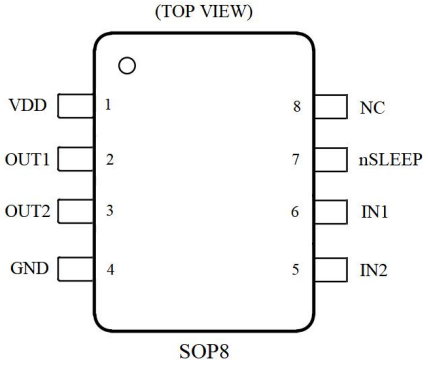

NAME	NO.			TYPE	DESCRIPTION
	DFN2*2-8L	SOP8	ESOP8		
VDD	1	1	4	P	Power Supply
OUT1	2	2	8	O	Full-Bridge Output 1
OUT2	3	3	5	O	Full-Bridge Output 2
GND	4	4	6	G	GND
IN2	5	5	3	I	Control Logic Input 2
IN1	6	6	2	I	Control Logic Input 1
nSLEEP	7	7	-	I	SLEEP mode input
NC	8	8	1, 7	NC	NC
Thermal PAD	-	-	-	G	GND

18V1.5A Single Channel H-Bridge Motor Driver

PACKAGE/ORDERING INFORMATION

Part Number	Package	Qty/TR	Operating Temperature Range
XTM4837AD3CT	DFN2*2-8L	3000	-40°C~85°C
XTM4837AT3CT	ESOP8	3000	-40°C~85°C
XTM4837AS8CT	SOP8	3000	-40°C~85°C

ABSOLUTE MAXIMUM RATINGS

Parameter		Min	Max	Unit
Power Supply	V_{DD}	-0.3	20.0	V
Output Current (Peak)	I_{PEAK}	0	2.2	A
Input Logic Voltage	$V_{IN1/IN2}$	-0.3	5.5	V
ESD (HBM)	ESD	2000	-	V
Operating Temperature	T_{OPR}	-40	85	°C
Storage Temperature	T_{stg}	-65	150	°C
Junction Temperature	T_j	-	150	°C
Lead Temperature (Soldering 10s)		-	260	°C

RECOMMENDED OPERATING CONDITIONS （Unless otherwise noted, Ta=25°C）

Parameter		Min	Max	Unit
Power Supply	V_{DD}	3.7	18	V
Input Logic Voltage	$V_{IN1/IN2}$	0	5	V
Output Current (continuously)	I_{OUT}	0	1.5	A
Input PWM Frequency	f_{PWM}	0	250	KHz

18V1.5A Single Channel H-Bridge Motor Driver

ELECTRICAL CHARACTERISTICS

Unless otherwise noted, V_{DD}=12V, Ta=25°C

Symbol	Parameter	Test Conditions	Min	Typ	Max	Unit
POWER SUPPLY						
I_{DDQ}	Standby Current	nSLEEP=L, no load,	-	-	1	uA
I_{DD}	Operating Current	INx=50KHz PWM, nSLEEP=H, no load	-	0.5	0.8	mA
INPUT LOGIC						
V_{INH}	Input High Voltage		1.5	-	5.5	V
V_{INL}	Input Low Voltage		-	-	0.6	V
I_{INH}	Input High Current	V_{INx}=3.3V	20	-	50	uA
I_{INL}	Input Low Current	V_{INx}=0V	-	0	-	μA
R_{IN}	Pulldown resistance		-	100	-	KΩ
PROTECTION CIRCUITS						
T_{TSD}	Thermal shutdown temperature		-	160	-	℃
T_{TSDHYS}	Thermal shutdown hysteresis		-	20	-	℃
V_{UVLO}	VM supply under-voltage lockout		-	3	-	V
$V_{UVLOHYS}$	Supply UVLO hysteresis		-	100	-	mV
I_{OCP}	Overcurrent protection trip point		2.2	-	-	A
H-Bridge FETs						
$R_{DS(ON)}$	HS+LS FETs on-resistance	I_{LOAD}=0.5A, HS+LS	-	0.55	0.75	Ω
Time sequence requirements						
t1	Output enable time		-	-	350	ns
t2	Output disable time		-	-	350	ns
t3	Delay time, INx high to OUTx high		-	-	350	ns
t4	Delay time, INx low to OUTx low		-	-	350	ns
t5	Output rise time		10	-	200	ns
t6	Output fall time		10	-	200	ns
DT	Dead time		-	300	-	ns

18V1.5A Single Channel H-Bridge Motor Driver

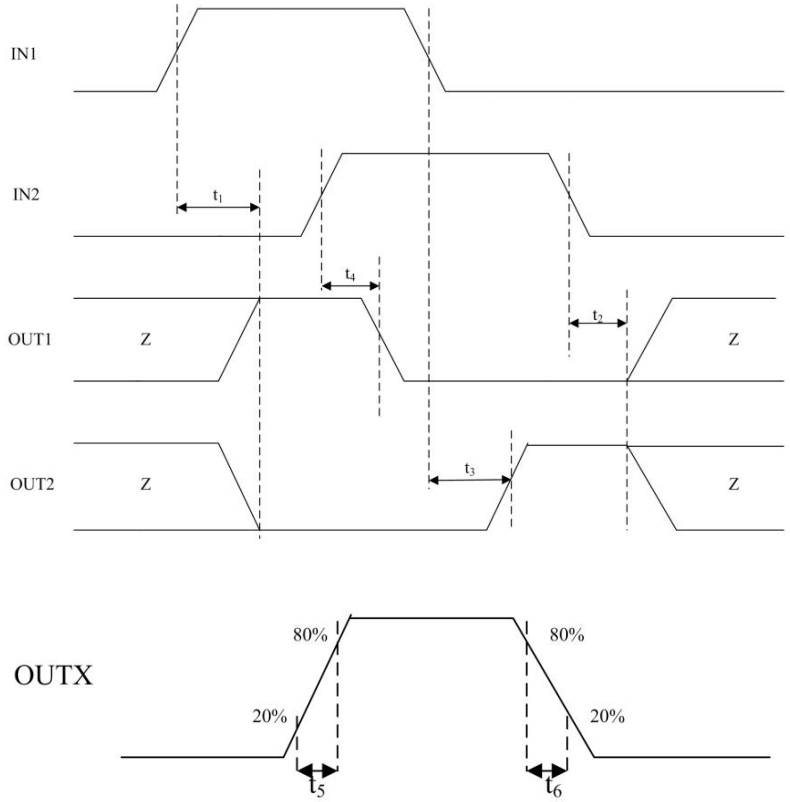

Figure 2. Input and Output Timing

18V1.5A Single Channel H-Bridge Motor Driver

BLOCK DIAGRAM

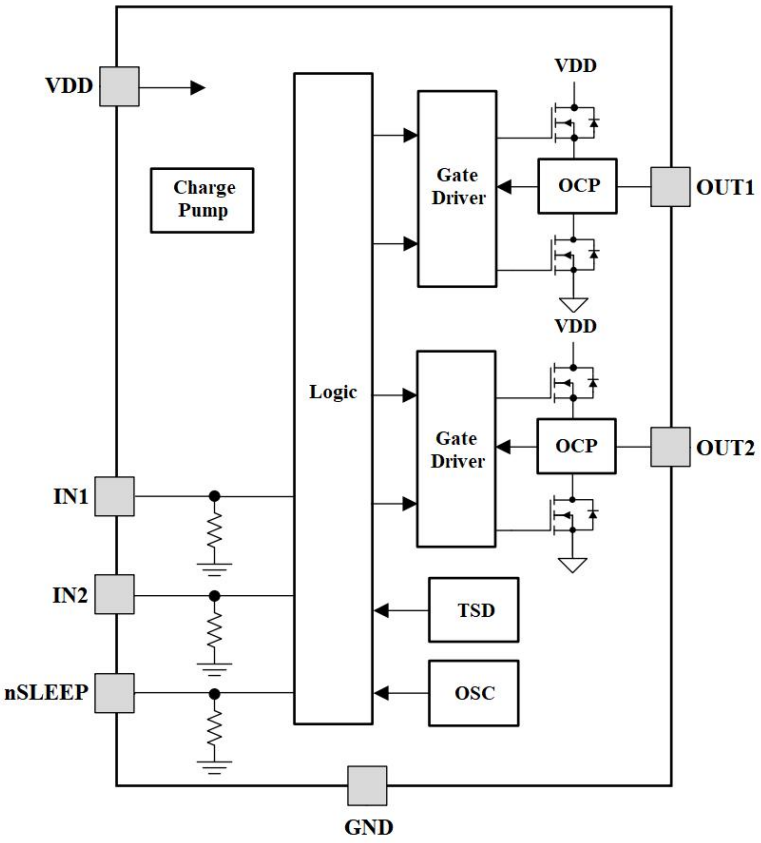

Figure 3. Function Block Diagram

18V1.5A Single Channel H-Bridge Motor Driver

DETAILED DESCRIPTION

OVERVIEW

XTM4837 can drive one DC brush motor, or solenoids, or other inductive load. The H-Bridge driver is consists by all of N-channel MOSFETs. The device have built-in protection features, includes under-voltage lockout (UVLO), over current protection (OCP) and thermal shutdown (TSD).

H-BRIDGE CTRL LOGIC

nSLEEP	IN1	IN2	OUT1	OUT2	FUNCTION
L	X	X	High-Z	High-Z	Coast
H	L	L	High-Z	High-Z	Coast
H	H	L	H	L	Forward
H	L	H	L	H	Reverse
H	H	H	L	L	Brake

The inputs can also be used for PWM control of the motor speed. When controlling a winding with PWM and the drive current is interrupted, the inductive nature of the motor requires that the current must continue to flow (called re-circulation current). To handle this re-circulation current, the H-bridge can operate in two different states, fast decay or slow decay. In fast-decay mode, the H-bridge is disabled and re-circulation current flows through the body diodes. In slow-decay mode, the motor winding is shorted by enabling both low-side FETs.

To externally pulse-width modulate the bridge in fast-decay mode, the PWM signal is applied to one xIN pin while the other is held low; to use slow-decay mode, one xIN pin is held high.

IN1	IN2	FUNCTION
PWM	0	Forward PWM, fast decay
1	PWM	Forward PWM, slow decay
0	PWM	Reverse PWM, fast decay
PWM	1	Reverse PWM, slow decay

The figure as below show the current paths in different drive and decay modes.

18V1.5A Single Channel H-Bridge Motor Driver

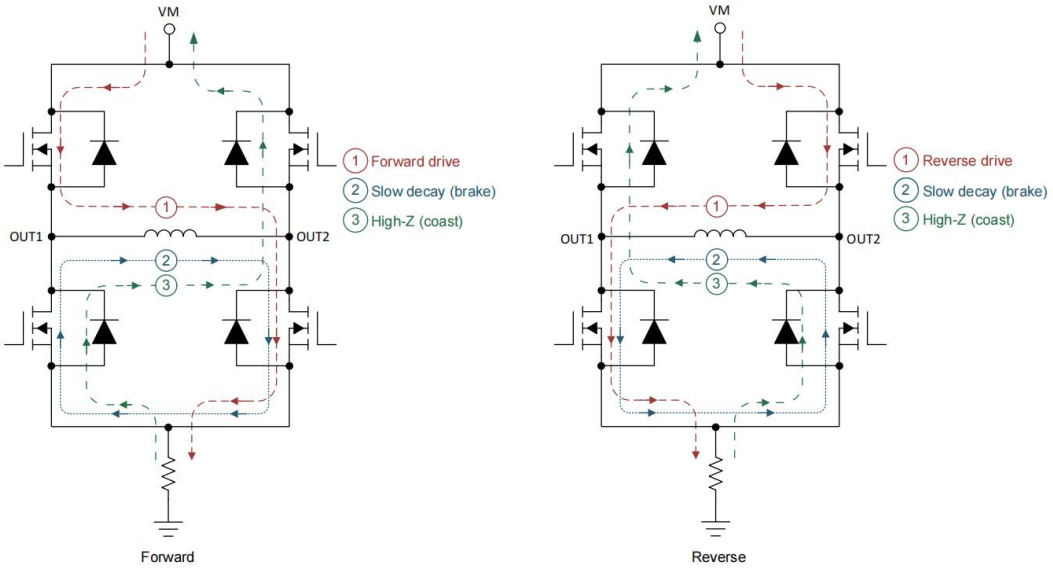

Figure 4. Drive and Decay Modes

APPLICATION INSTRUCTIONS

The recommended PWM is shown in the figure below:

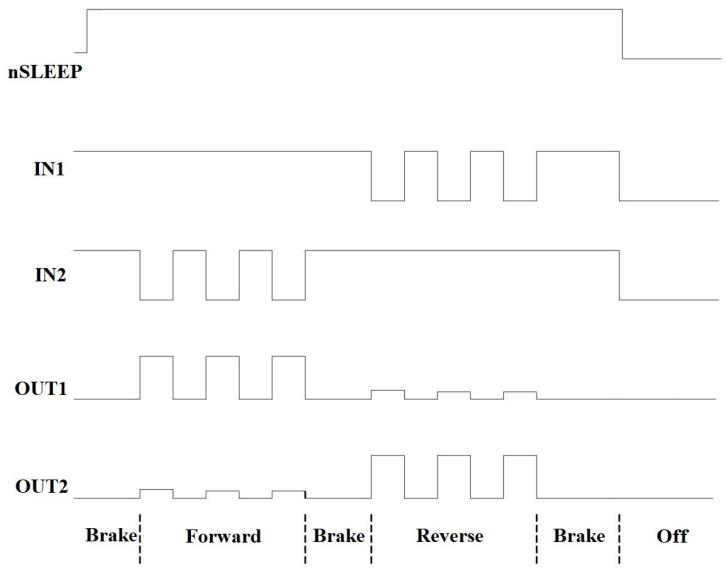

XTM4837AD3CT / XTM4837AS8CT with nSLEEP control, XTM4837AT3CT without nSLEEP control

When the input signal IN1=H, IN2 is PWM, or IN1 is PWM, IN2=H, the rotation speed of the motor will be controlled by the PWM signal duty cycle. In this mode, the output of the driver circuit is between the conduction and brake mode, and the energy stored in the motor is rapidly released through the low side NMOS in the brake mode.

18V1.5A Single Channel H-Bridge Motor Driver

NTOE: Due to the brake state, the motor energy can be released quickly, and the motor speed can be accurately controlled by the duty cycle of the PWM signal. However, it must be noted that if the PWM signal frequency is too low, the motor will not be able to rotate continuously and smoothly due to entering the brake mode. To reduce the motor noise, it is recommended that the PWM signal frequency be greater than 10KHz and less than 50KHz.

APPLICATION CIRCUIT NOTE

1.The operating condition over the absolute parameters of the chip is not allowed

2.Don’t short the two outputs or the power supply and ground. If the peak current is too high, the IC will be burned

3.If the motor exceeds the peak current designed by the IC when locked, the IC will also be damaged

4.The bypass capacitor of VDD should be as close to the VDD pin of the chip as possible

5.The ground wire connecting the motor needs to be isolated in the layout

18V1.5A Single Channel H-Bridge Motor Driver

PACKAGE INFORMATION

DFN2*2-8L

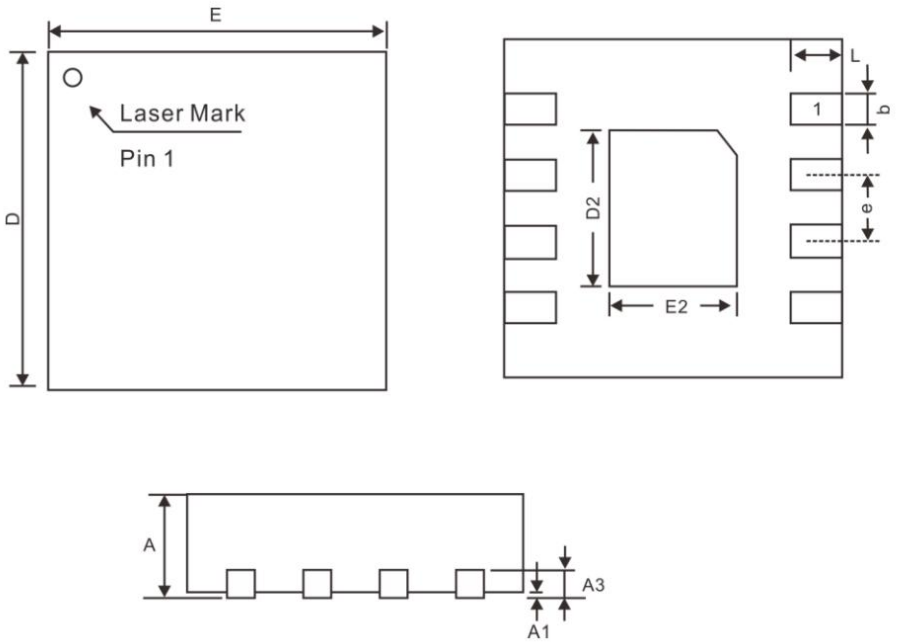

Symbol	Dimensions In Millimeters		
	Min	Nom	Max
A	0.70	0.75	0.80
A1	0.00	0.02	0.05
A3	0.20REF		
b	0.18	0.25	0.30
D	2.00BSC		
E	2.00BSC		
e	0.50BSC		
D2	1.50	1.60	1.65
E2	0.80	0.90	0.95
L	0.25	0.30	0.35

18V1.5A Single Channel H-Bridge Motor Driver

PACKAGE INFORMATION

ESOP8

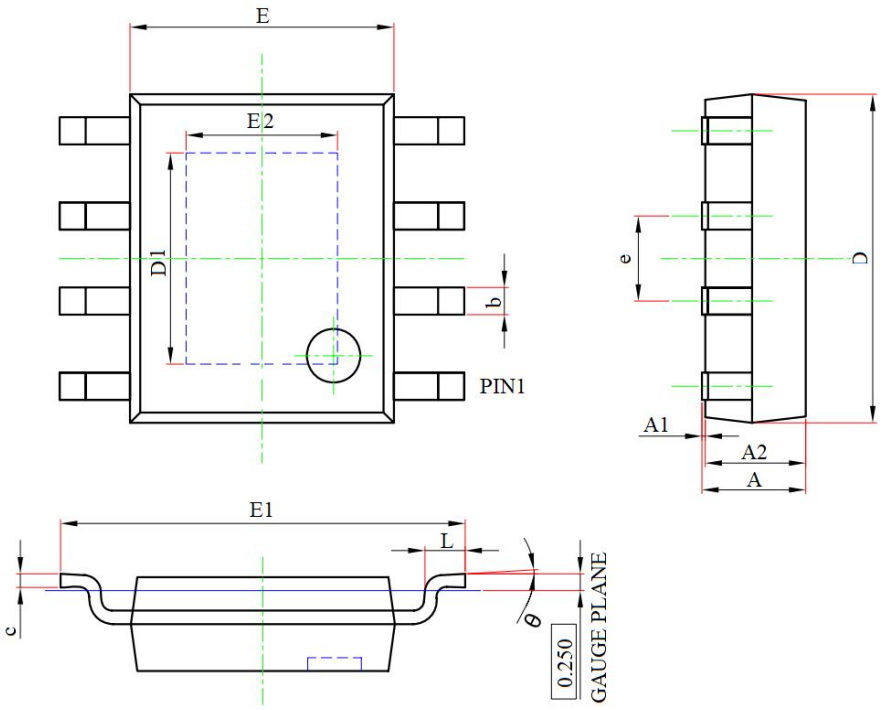

SYMBOL	DIMENSIONS IN MILLIMETERS	
	MIN	MAX
A	1.300	1.700
A1	0.000	0.100
A2	1.350	1.550
b	0.330	0.510
c	0.170	0.250
D	4.700	5.100
E	3.800	4.000
D1	3.050	3.350
E1	5.800	6.200
E2	2.160	2.360
e	1.27BSC	
L	0.400	1.270
θ	0	8°

18V1.5A Single Channel H-Bridge Motor Driver

PACKAGE INFORMATION

SOP8

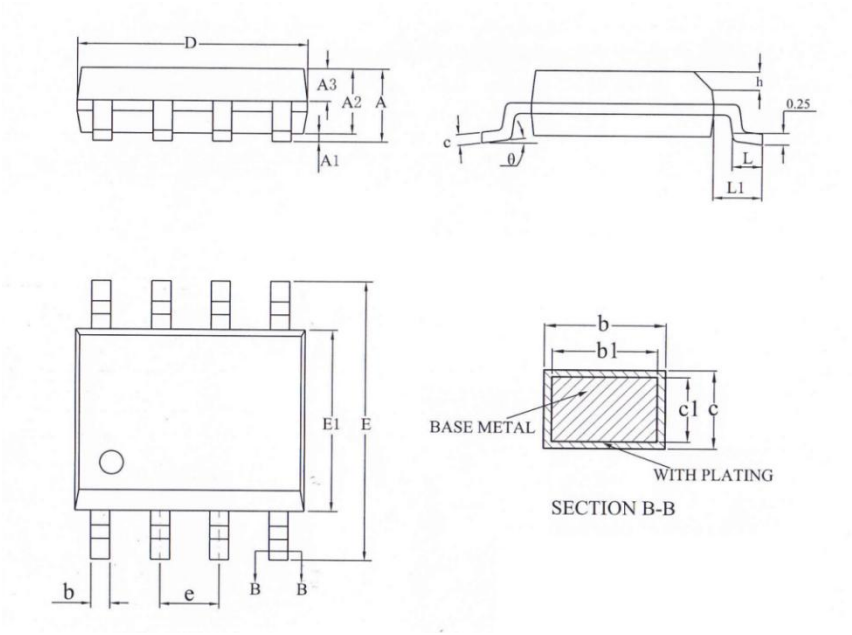

Symbol	Dimensions In Millimeters		
	Min	Nom	Max
A	-	-	1.75
A1	0.05	-	0.225
A2	1.30	1.40	1.50
A3	0.60	0.65	0.70
b	0.39	-	0.47
b1	0.38	0.41	0.44
c	0.20	-	0.24
c1	0.19	0.20	0.21
e	1.27BSC		
D	4.80	4.90	5.00
E	5.80	6.00	6.20
E1	3.80	3.90	4.00
h	0.25	-	0.50
L	0.50	-	0.80
L1	1.05REF		
θ	0	-	8°

18V1.5A Single Channel H-Bridge Motor Driver

REVISION HISTORY

Number	Date	Description
Rev 0.0	2024/01	XTM4837 datasheet release
Rev 0.1	2024/11	Update the ESOP8 MPQ