MSKSEMI 美森科
SEMICONDUCTOR

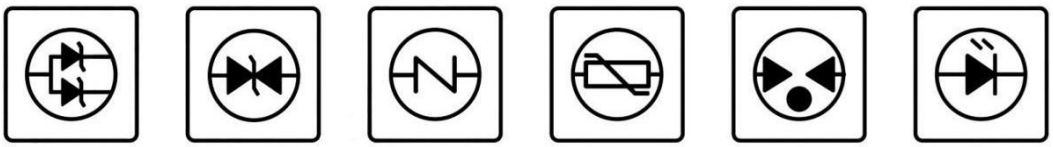

74LVC1G34GW-MS/74LVC1G34GV-MS

Product specification

General Description

The operating voltage range of the 74LVC1G34GW-MS/74LVC1G34GV-MS single buffer is 1.65 Vto 5.5V. The 74LVC1G34GW-MS/74LVC1G34GV-MS device contains one buffer and performs the Boolean function Y =A.The CMOS device hsa higt output drive while maintaining low static power dissipation over a broad VC C operating range.

This device is fully specified for partial-power-down applications using I_{off}.The I_{off} circuitry disables the outputs,preventing damaging current backflow through the device when it is powered down.

Features

- Low Power Consumption,10-μA Max Icc
- Supports 5V Vcc Operation
- Inputs Accept Voltages to 5.5V
- Max t_{pd} of 3.3 ns at 3.3 V
- ±24mA Output Drive at 3.3 V
- Ioff Supports Partial-Power-Down Mode
- Typical V_{OHV}>2Vat Vcc=3.3 V,T_A=25℃
- Typical V_{OLP}<0.8 Vat Vcc=3.3 V,T_A=25°℃

Applications

- AV Receivers
- Audio Docks:Portable
- Blu-ray Players and Home Theater
- Embedded PC
- MP3 Player/Recorder (Portable Audio)
- Personal Digital Assistant(PDA)
- Power:Telecom/Server AC/DC Supply
- Solid State Drive (SSD):Client and Enterprise
- TV:LCD/Digital and High-Definition (HDTV)
- Tablet:Enterprise
- Video Analytics:Server
- Wireless Headset,Keyboard,and Mouse

Pinning and Marking

SOT-23-5	Pin Configurations	Marking
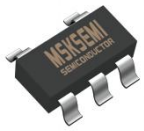	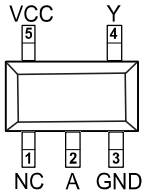	

SOT-353	Pin Configurations	Marking
	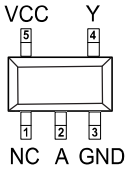	

Pin Functions

Pin		Type	Description
Name	SOT23-5/SOT-353		
NC	1	—	No internal connection
A	2	I	Input
GND	3	—	Ground
Y	4	O	Output
VCC	5	—	PositiveSupply

Copyright© Msksemi Incorporated

Order information

Orderable Device	Package	Packing Option
74LVC1G34GV-MS	SOT-23-5	3000PCS
74LVC1G34GW-MS	SOT-353	3000PCS

Circuit Diagram

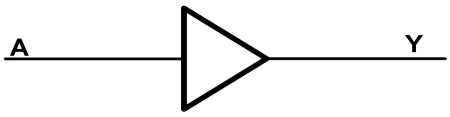

Absolute Maximum Ratings

Parameters			Min	Max.	Unit
V_{CC}	Supply voltage range		-0.5	6.5	V
V_I	Input voltage range		-0.5	6.5	V
V_O	Voltage range applied to any output in the high-impedance or power-off state		-0.5	6.5	V
V_O	Voltage range applied to any output in the high or low state		-0.5	V_{CC}+0.5	V
I_{IK}	Input clamp current	V_I<0		-50	mA
I_{OK}	Output clamp current	V_O<0		-50	mA
I_O	Continuous output current			±50	mA
Continuous current through V_{CC} or GND				±100	mA
T_J	Junction temperature under bias			150	℃
T_{stg}	Storage temperature range		-65	150	℃

(1) Stresses beyond those listed under Absolute Maximum Ratings may cause permanent damage to the device. These are stress ratings only, and functional operation of the device at these or any other conditions beyond those indicated under Recommended Operating Conditions is not implied. Exposure to absolute-maximum-rated conditions for extended periods may affect device reliability.
(2) The input negative-voltage and output voltage ratings may be exceeded if the input and output current ratings are observed.

Recommended Operating Conditions

Over operating free-air temperature range (unless otherwise noted)

Symbol	Parameter		Min	Max	Unit
V_{CC}	Supply voltage		1.65	5.5	V
V_I	Input voltage		0	5.5	V
V_O	Output voltage		0	V_{CC}	V
I_{OH}	High-level output current	V_{CC}=1.65V		-4	mA
		V_{CC}=2.3V		-8	
		V_{CC}=3V		-16	
				-24	
		V_{CC}=4.5V		-32	
I_{OL}	Low-level output current	V_{CC}=1.65V		4	mA
		V_{CC}=2.3V		8	
		V_{CC}=3V		16	
				24	
		V_{CC}=4.5V		32	
T_A	Operating free-air temperature		-40	125	℃

Copyright© Msksemi Incorporated

Electrical Characteristics

Vcc=5.0V or 3.3V, Typical values are at T_A =+25°C. (unless otherwise noted).

Parameter		Test Conditions	V_{CC}	–40°C to 85°C			–40°C to 125°C			Unit
				Min	Typ	Max	Min	Typ	Max	
V_{OH}		I_{OH}=–100 μA	1.65 V to 5.5 V	V_{CC}-0.1			V_{CC}-0.1			V
		I_{OH}=–4 mA	1.65 V	1.2			1.2			
		I_{OH}=–8 mA	2.3 V	1.9			1.9			
		I_{OH}=–16 mA	3 V	2.4			2.4			
		I_{OH}=–24 mA		2.3			2.3			
		I_{OH}=–32 mA	4.5 V	3.8			3.8			
V_{OL}		I_{OL}=100 μA	1.65 V to 5.5 V			0.1			0.1	V
		I_{OL}=4 mA	1.65 V			0.45			0.45	
		I_{OL}=8 mA	2.3 V			0.3			0.3	
		I_{OL}=16 mA	3 V			0.4			0.4	
		I_{OL}=24 mA				0.55			0.55	
		I_{OL}=32 mA	4.5 V			0.55			0.55	
I_I	A input	V_I=5.5 V or GND	0 to 5.5 V			±5			±5	μA
I_{off}		V_I or V_O=5.5 V	0			±10			±10	μA
I_{CC}		V_I=5.5 V or GND, I_O=0	1.65 V to 5.5 V			10			10	μA
ΔI_{CC}		One input at V_{CC} – 0.6 V, Other inputs at V_{CC} or GND	3 V to 5.5 V			500			500	μA
C_i		V_I=V_{CC} or GND	3.3 V		5			5		pF

(1) All unused digital inputs of the device must be held at V_{cc} or GND to ensure proper device operation

Vcc=5.0V or 3.3V, Typical values are at T_A =+25°C. (unless otherwise noted).

Parameter	From (Input)	To (Output)	–40°C to 125°C								Unit
			V_{CC}=1.8 V ± 0.15 V		V_{CC}=2.5 V ± 0.2 V		V_{CC}=3.3 V ± 0.3 V		V_{CC}=5 V ± 0.5 V		
			Min	Max	Min	Max	Min	Max	Min	Max	
t_{pd}	A	Y	3.9	9.5	1.4	4.5	1	3.3	1	3.0	ns

T_A=25°C

Parameter		Test Conditions	V_{CC}=1.8 V	V_{CC}=2.5 V	V_{CC}=3.3 V	V_{CC}=5 V	Unit
			Typ	Typ	Typ	Typ	
C_{pd}	Power dissipation capacitance	f=10 MHz	17	28	33	47	pF

Copyright© Msksemi Incorporated

Typical Characteristics

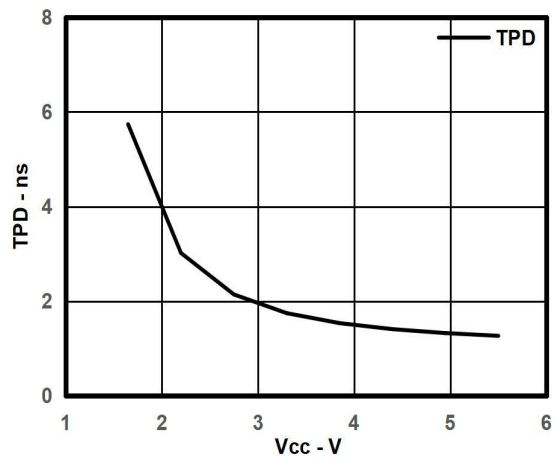

Fig.8-1. Typical Tpd vs Vcc

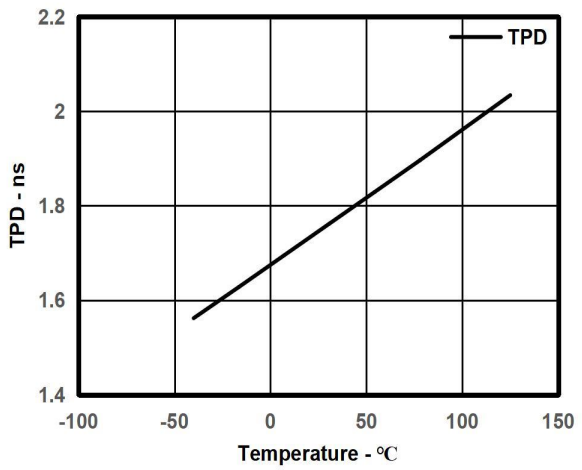

Fig.8-2. Typical Tpd vs Temp

Parameter Measurement Information

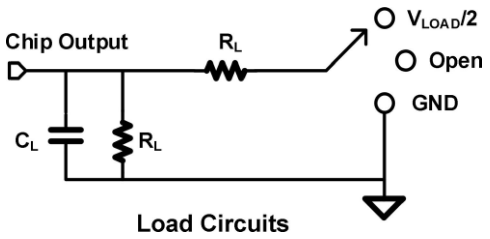

TEST	S1
T_{PHL}/T_{PLH}	OPEN
T_{PLZ}/T_{PZL}	V_{LOAD}
T_{PHZ}/T_{PZH}	GND

V_{CC}	INPUTS		V_M	V_{LOAD}	C_L	R_L	V_Δ
	V_I	T_r/T_f					
1.8V±0.15V	V_{CC}	≤2ns	$V_{CC}/2$	2×V_{CC}	30pF	1kΩ	0.15V
2.5V±0.15V	V_{CC}	≤2ns	$V_{CC}/2$	2×V_{CC}	30pF	500Ω	0.15V
3.3V±0.15V	3V	≤2.5ns	1.5V	6V	50pF	500Ω	0.3V
5V±0.15V	V_{CC}	≤2.5ns	$V_{CC}/2$	2×V_{CC}	50pF	500Ω	0.3V

Copyright© Msksemi Incorporated

Parameter Measurement Information(Continued)

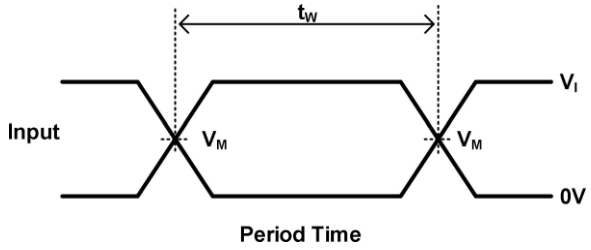

Period Time

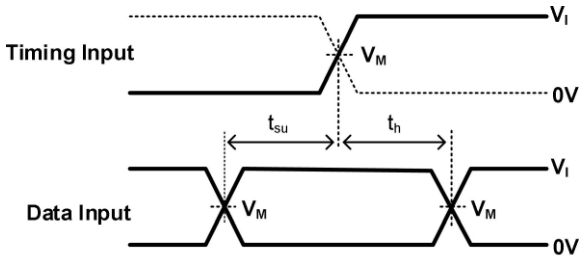

Setup and Hold Times

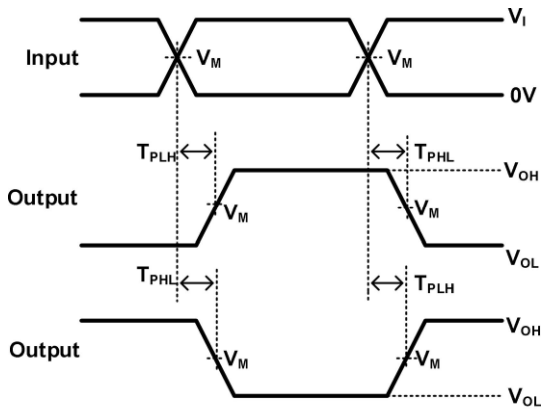

Propagation Delay
for Output and Inverted Output

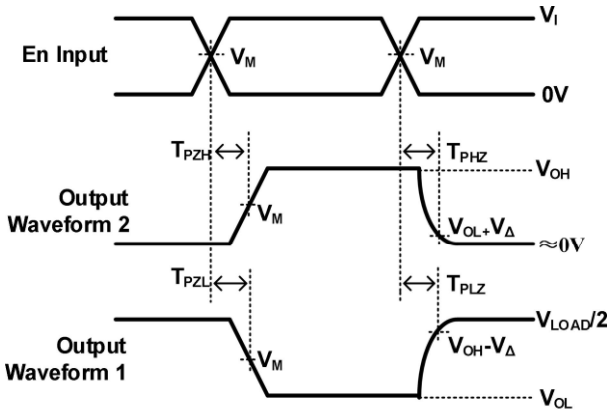

Enable and Disable Times
Low-And High-Level Enabling

Notes: A. C_L includes probe and jig capacitance.
B. Waveform 1 is for an output with internal conditions such that the output is low, except when disabled by the output control.
Waveform 2 is for an output with internal conditions such that the output is high, except when disabled by the output control.
C. All input pulses are supplied by generators having the following characteristics: PRR 10 MHz, Z =50.
D. The outputs are measured one at a time, with one transition per measurement.
E. t_{PLZ} and t_{PHZ} are the same as t_{dis}.
F. t_{PZL} and t_{PZH} are the same as t_{en}.
G. t_{PLH} and t_{PHL} are the same as t_{pd}.
H. All parameters and waveforms are not applicable to all device.

Feature Description

The device is designed for 1.65V to 5.5V V_{CC} operation and it allows down voltage translation from 5V to 3.3V, or 3.3V to 1.8V. The input voltage of 74LVC1G34GW-MS/74LVC1G34GV-MS accepts to 5.5V.

The 74LVC1G34GW-MS/74LVC1G34GV-MS has power-down protection (off) and Schmitt-trigger input.

I_{off} feature allows voltage on the inputs and outputs when V_{CC} is 0 V, and is able to reduce leakage when V_{CC} is 0V.

Schmitt-Trigger input can improve the noise immunity capability

Device Functional Modes

Input A	Output Y
H	H
L	L

Copyright© Msksemi Incorporated

Application Information

The 74LVC1G34GW-MS/74LVC1G34GV-MS is a high drive CMOS device that can be used for implementing inversion logic with a high output drive, such as an LED application. It can produce 24 mA of drive current at 3.3 V making it Ideal for driving multiple outputs and good for high-speed applications up to 100 Mhz.

The inputs are 5.5 V tolerant allowing it to translate down to V_{CC}.

Typical Power Button Circuit

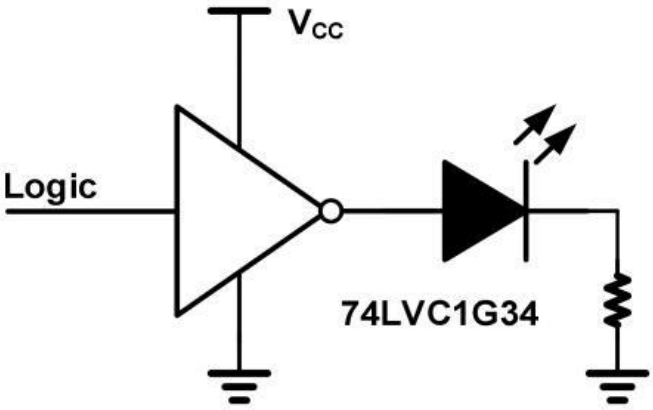

Package Outline

SOT23-5

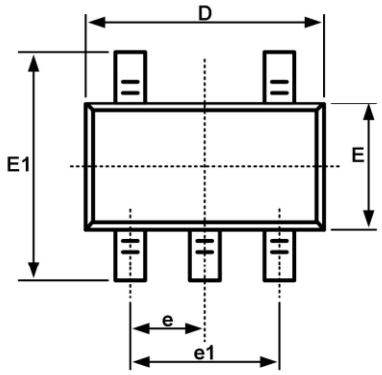

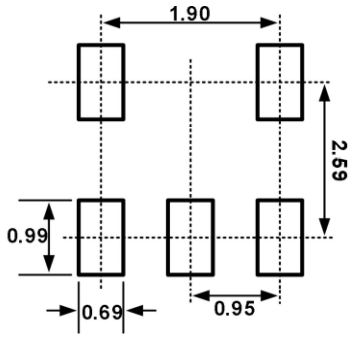

Recommended Land Pattern (Unit: mm)

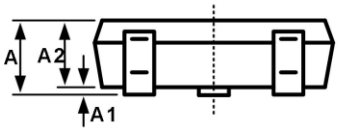

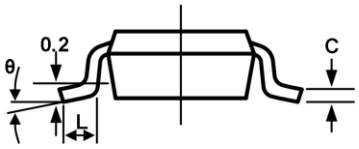

Symbol	Dimensions In Millimeters		Dimensions In Inches	
	Min	Max	Min	Max
A	1.050	1.250	0.041	0.049
A1	0.000	0.100	0.000	0.004
A2	1.050	1.150	0.041	0.045
b	0.300	0.500	0.012	0.020
c	0.100	0.200	0.004	0.008
D	2.820	3.020	0.111	0.119
E	1.500	1.700	0.059	0.067
E1	2.650	2.950	0.104	0.116
e	0.950BSC		0.037BSC	
e1	1.800	2.000	0.071	0.079
L	0.300	0.600	0.012	0.024
L1	0.600REF		0.024REF	
θ	0°	8°	0°	8°

Copyright© Msksemi Incorporated

Package Outline
SC70-5

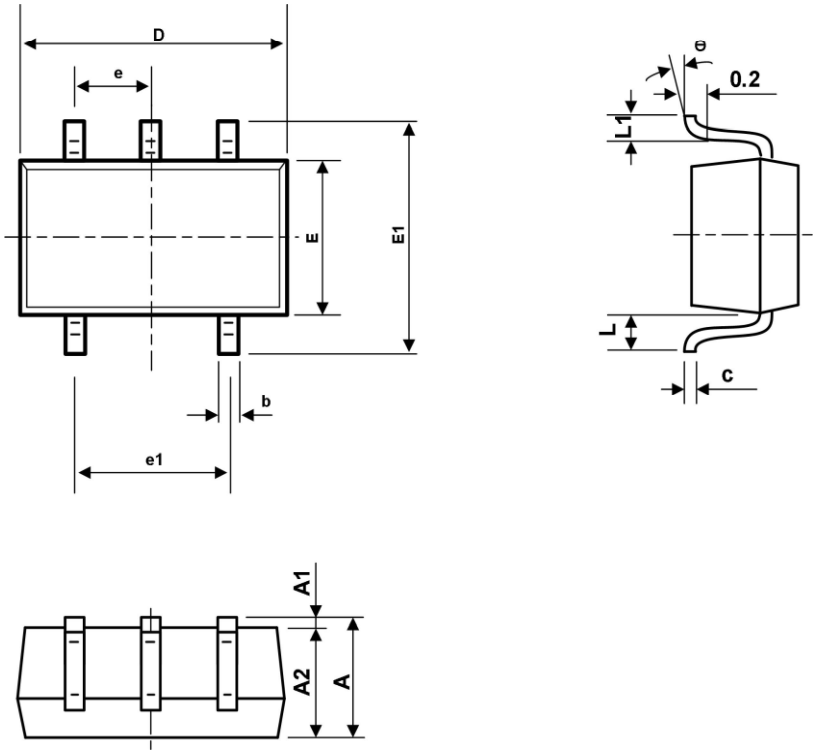

symbol	Dimension In Millimeters		Dimensions In Inches	
	Min	Max	Min	Max
A	0.900	1.100	0.035	0.043
A1	0.000	0.100	0.000	0.004
A2	0.900	1.000	0.035	0.039
b	0.150	0.350	0.006	0.014
c	0.110	0.175	0.004	0.007
D	2.000	2.200	0.079	0.087
E	1.150	1.350	0.045	0.053
E1	2.150	2.450	0.085	0.096
e	0.650TYP		0.026TYP	
e1	1.200	1.400	0.047	0.055
L	0.525REF		0.021REF	
L1	0.260	0.460	0.010	0.018
θ	0°	8°	0°	8°

Copyright© Msksemi Incorporated

Attention

■ Any and all MSKSEMI Semiconductor products described or contained herein do not have specifications that can handle applications that require extremely high levels of reliability, such as life-support systems, aircraft's control systems, or other applications whose failure can be reasonably expected to result in serious physical and/or material damage. Consult with your MSKSEMI Semiconductor representative nearest you before using any MSKSEMI Semiconductor products described or contained herein in such applications.

■ MSKSEMI Semiconductor assumes no responsibility for equipment failures that result from using products at values that exceed, even momentarily, rated values (such as maximum ratings, operating condition ranges, or other parameters) listed in products specificationsof any andall MSKSEMI Semiconductor products described orcontained herein.

■ Specifications of any and all MSKSEMI Semiconductor products described or contained herein stipulate the performance, characteristics, and functions of the described products in the independent state, and are not guarantees of the performance, characteristics, and functions of the described products as mounted in the customer's products or equipment. To verify symptoms and states that cannot be evaluated in an independent device, the customer should always evaluate and test devices mounted in the customer'sproducts orequipment.

■ MSKSEMI Semiconductor. strives to supply high-quality high-reliability products. However, any and all semiconductor products fail with someprobability. It is possiblethat these probabilistic failures could give rise to accidents or events that could endanger human lives, that could give rise to smoke or fire, or that could cause damage to other property. When designing equipment, adopt safety measures so that these kinds of accidents or events cannot occur. Such measures include but are not limited to protective circuits anderror prevention circuitsfor safedesign, redundant design, and structural design.

■ In the event that any or all MSKSEMI Semiconductor products(including technical data, services) described or contained herein are controlled under any of applicable local export control laws and regulations, such products must not be exported without obtaining the export license from theauthorities concerned in accordance with the above law.

■ No part of this publication may be reproduced or transmitted in any form or by any means, electronic or mechanical, including photocopying and recording, or any information storage or retrieval system, or otherwise, without the prior written permission of MSKSEMI Semiconductor.

■ Information (including circuit diagrams and circuit parameters) herein is for example only ; it is not guaranteed for volume production. MSKSEMI Semiconductor believes information herein is accurate and reliable, but no guarantees are made or implied regarding its use or any infringementsof intellectual property rights or other rightsof third parties.

■ Any and all information described or contained herein are subject to change without notice due to product/technology improvement, etc. Whendesigning equipment, referto the "Delivery Specification" for the MSKSEMI Semiconductor productthat you intend to use.

Copyright© Msksemi Incorporated