HAOYU

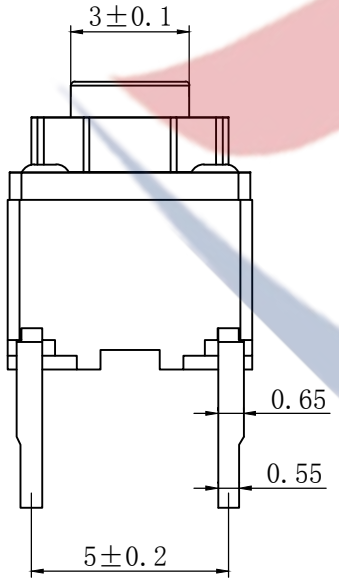

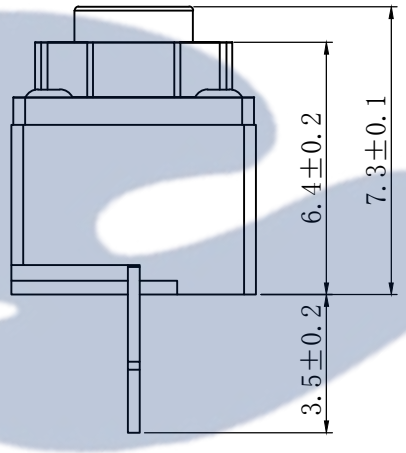

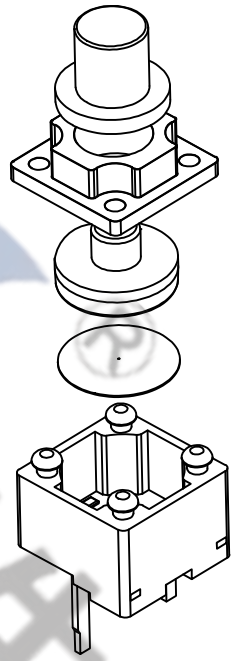

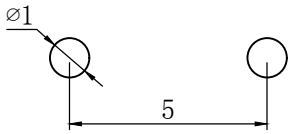

P.C.B LAYOUT

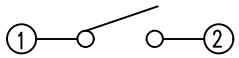

SCHEMATIC

邮箱：hooya89@hooya.hk
电话：0769-82310511-867

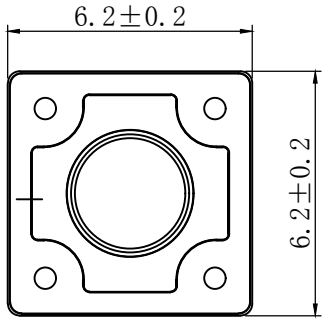

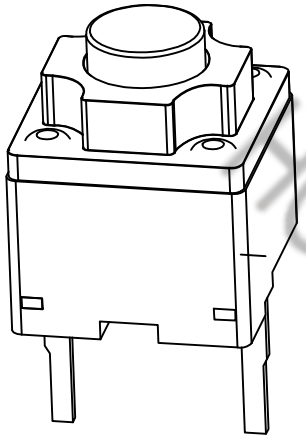

SPECIFICATION
1.Rating : DC12V 50mA.
2.Contact resistance: ≤100mΩ.
3.Insulation resistance: ≥100MΩ (DC250V).
4.Withstanding voltage: 250VAC .
5.Operating Force: 70±10gf
6.Travel:0.25±0.1mm.
7.life test: 3000000 cycles.
8.Operation temperature range:-25℃~85℃.
9.Sign"* "is importance dimension.

NO.	PART NAME	MATERIAL	QTY	FINISHING
6	CONTACT	BRASS	1	Ag-PLATED
5	CASE	PPA	1	BLACK
4	SPRING	SILVERCOPPERCOMPLEX/SUS	1	
3	INNER-BUTTON	RUBBER	1	
2	BUTTON	PPA	1	BLACK/RED
1	COVER	PPA	1	BLACK

TOLERANCE UNLESS SPECIFIED
<1.5: ±0.1mm
>1.5~5.0: ±0.25mm
>5.0: ±0.3mm
ANGULAR ±1°

NO	DATE	REVISIONS	BY	APPD

TITLE: TACT SWITCH
MODEL: TC-00102DB-073-03
UNIT : MM
SCALE: 1:1
ROHS COMPLIANT
DWN
CHK'D
APPD
PRO.AGL:
REV: A0

DONGGUANG HAOYU ELECTRONICS CO., LTD
皓宇 HOOYA
东莞市弘皓电子有限公司