3.0V 32, 64, 128, 256, 512M-BIT, 1G-BIT, 2G-BIT SERIAL FLASH MEMORY WITH DUAL/QUAD SPI, QPI & DTR

Industrial Plus Grade

Preliminary Designation

The data for W25Q25RV is currently in a preliminary state.

The “Preliminary” designation on a *Winbond* datasheet indicates that the product is not fully characterized. The specifications are subject to change and are not guaranteed. *Winbond* or an authorized sales representative should be consulted for current information before using this product.

Table of Contents

1 FEATURE DESCRIPTIONS 5
2 PACKAGE TYPES AND PIN CONFIGURATIONS 6
2.1 Pin Configuration SOP 150/208-mil 6
2.2 Pad Configuration XSON 4x4-mm, USON 4X3mm, WSON 6x5-mm, 8x6-mm,VSON 8x6mm 6
2.3 Pad Description for Package Code: SN, CN, SS, CS, XG, UU, ZP, CP, ZE, CE 6
2.4 Pin Configuration SOP 300-mil 7
2.5 Pin Description for Package Code SF, CF 7
2.6 Ball Configuration TFBGA 8x6-mm (5x5 Ball Array) 8
2.7 Ball Description for Package Code TB, CB 8
3 PIN DESCRIPTIONS 9
3.1 Chip Select (/CS) 9
3.2 Serial Data Input, Output and IOs (DI, DO and IO0, IO1, IO2, IO3) 9
3.3 Write Protect (/WP) 9
3.4 HOLD (/HOLD) 9
3.5 Serial Clock (CLK) 9
3.6 Reset (/RESET) 10
3.7 BUSY (/BUSY) 10
3.8 Data Strobe (DS) 10
4 BLOCK DIAGRAM 11
5 FUNCTIONAL DESCRIPTIONS 12
5.1 SPI / QPI Operations 12
5.1.1 Standard SPI Instructions 12
5.1.2 Dual SPI Instructions 12
5.1.3 Quad SPI Instructions 12
5.1.4 QPI Instructions 13
5.1.5 SPI / QPI DTR Read Instructions 13
5.1.6 3-Byte / 4-Byte Address Modes 14
5.1.7 Hold Function 14
5.1.8 Software Reset & Hardware /RESET pin 15
5.1.9 Reset Signaling Protocol 16
5.2 Write Protection 17
5.3 Status and Configuration Registers 19
5.3.1 Status Registers 19
5.3.2 Program/Erase/Write In Progress (BUSY) – *Status Only* 19
5.3.3 Write Enable Latch (WEL) – *Status Only* 19
5.3.4 Block Protect Bits (BP3, BP2, BP1, BP0) – *Volatile/Non-Volatile Writable* 19
5.3.5 Top/Bottom Block Protect (TB) – *Volatile/Non-Volatile Writable* 20
5.3.6 Complement Protect (CMP) – Volatile/Non-Volatile Writable 20
5.3.7 Sector/Block Protect Bit (SEC) – *Volatile/Non-Volatile Writable* 20
5.3.8 Status Register Protect (SRP, SRL) – *Volatile/Non-Volatile Writable* 21
5.3.9 Erase/Program Suspend Status (SUS) – *Status Only* 22
5.3.10 Security Register Lock Bits (LB3, LB2, LB1, SFDP Lock) –*Non-Volatile OTP Writable* 22
5.3.11 Quad Enable (QE) – Volatile/Non-Volatile Writable 22
5.3.12 Current Address Mode (ADS) – *Status Only* 22
5.3.13 Power-Up Address Mode (ADP) – Non-Volatile Writable 23
5.3.14 Write Protect Selection (WPS) – Volatile/Non-Volatile Writable 23
5.3.15 Data Strobe Function (DSEN)- *Volatile/Non-Volatile Writable* 24
5.3.16 Output Driver Strength (DRV1, DRV0) – *Volatile/Non-Volatile Writable* 24
5.3.17 /HOLD or /RESET Pin Function (HOLD/RST) – *Volatile/Non-Volatile Writable* 24
5.3.18 Reserved Bits – *Non-Functional* 24
5.4 Status Register Memory Protection (WPS = 0) 25
5.4.1 W25Q33RV Status Register Memory Protection (WPS = 0, CMP = 0) 25
5.4.2 W25Q33RV Status Register Memory Protection (WPS = 0, CMP = 1) 26
5.4.3 W25Q64RV Status Register Memory Protection (WPS = 0, CMP = 0) 27
5.4.4 W25Q64RV Status Register Memory Protection (WPS = 0, CMP = 1) 28
5.4.5 W25Q12RV Status Register Memory Protection (WPS = 0, CMP = 0) 29

5.4.6 W25Q12RV Status Register Memory Protection (WPS = 0, CMP = 1) 30
5.4.7 W25Q25RV Status Register Memory Protection (WPS = 0, CMP = 0) 31
5.4.8 W25Q25RV Status Register Memory Protection (WPS = 0, CMP = 1) 32
5.4.9 W25Q51RV Status Register Memory Protection (WPS = 0, CMP = 0) 33
5.4.10 W25Q51RV Status Register Memory Protection (WPS = 0, CMP = 1) 34
5.4.11 W25Q01RV Status Register Memory Protection (WPS = 0, CMP = 0) 35
5.4.12 W25Q01RV Status Register Memory Protection (WPS = 0, CMP = 1) 36
5.4.13 W25Q02RV Status Register Memory Protection (WPS = 0, CMP = 0) 37
5.4.14 W25Q02RV Status Register Memory Protection (WPS = 0, CMP = 1) 38
5.5 Flex Block Memory Protection (WPS=1) 39
5.5.1 W25Q33RV,64RV,12RV Flex Block Memory Protection (WPS=1) 39
5.5.2 W25Q25RV,51RV Flex Block Memory Protection (WPS=1) 40
5.5.3 W25Q01RV Flex Block Memory Protection (WPS=1) 41
5.5.4 W25Q02RV Flex Block Memory Protection (WPS=1) 42
5.6 Extended Address Register – Volatile Writable Only 43
5.7 Page Buffer 45
6 INSTRUCTIONS 46
6.1 Device ID and Instruction Set Tables 47
Manufacturer and Device Identification 47
6.2 W25Q33RV/64RV/12RV Command Table with Maximum Clock Frequencies (MHz)(1) 48
6.2.1 SPI Commands Operable in Both 3-Byte and 4-Byte Address Modes 48
6.2.2 SPI Commands Operable in Both 3-Byte and 4-Byte Address Modes 49
6.2.3 SPI Commands Operable in Both 3-Byte and 4-Byte Address Modes 50
6.2.4 SPI Commands Dependent in 3- Byte / 4- Byte Address Mode (ADS=1: A31–A0, ADS=0: A23–A0) 51
6.2.5 SPI Commands Dependent in 3-Byte / 4-Byte Address Mode (ADS=1: A31–A0, ADS=0: A23–A0) 52
6.2.6 QPI Commands Operable in Both 3-Byte and 4-Byte Address Modes 53
6.2.7 QPI Commands Operable in Both 3-Byte and 4-Byte Address Modes 54
6.2.8 QPI Commands Dependent in 3-Byte / 4-Byte Address Mode (ADS=1: A31–A0 / ADS=0: A23–A0) 54
6.2.9 QPI Commands Dependent in 3-Byte / 4-Byte Address Mode (ADS=1: A31–A0 / ADS=0: A23–A0) 55
6.2.10 QPI Commands Dependent in 3-Byte / 4-Byte Address Mode (ADS=1: A31–A0 / ADS=0: A23–A0) 56
6.2.11 SPI DTR Commands Dependent in 3-Byte / 4-Byte Address Mode (ADS=1: A31–A0, ADS=0: A23–A0) 57
6.2.12 SPI DTR Commands Operable in Both 3-Byte and 4-Byte Address Modes 58
6.2.13 QPI DTR Commands Dependent in 3-Byte / 4-Byte Address Mode (ADS=1: A31–A0, ADS=0: A23–A0) 59
6.2.14 QPI DTR Commands Dependent in 3-Byte / 4-Byte Address Mode (ADS=1: A31–A0, ADS=0: A23–A0) 60
6.2.15 QPI DTR Commands Operable in Both 3-Byte and 4-Byte Address Modes 60
6.3 W25Q25RV/51RV/01RV/02RV Command Table with Maximum Clock Frequencies (MHz)(1) 61
6.3.1 SPI Commands Operable in Both 3-Byte and 4-Byte Address Modes 61
6.3.2 SPI Commands Operable in Both 3-Byte and 4-Byte Address Modes 62
6.3.3 SPI Commands Operable in Both 3-Byte and 4-Byte Address Modes 63
6.3.4 SPI Commands Dependent in 3- Byte / 4- Byte Address Mode (ADS=1: A31–A0 / ADS=0: A23–A0) 64
6.3.5 SPI Commands Dependent in 3-Byte / 4-Byte Address Mode (ADS=1: A31–A0 / ADS=0: A23–A0) 65
6.3.6 QPI Commands Operable in Both 3-Byte and 4-Byte Address Modes 66
6.3.7 QPI Commands Operable in Both 3-Byte and 4-Byte Address Modes 67
6.3.8 QPI Commands Dependent in 3-Byte / 4-Byte Address Mode (ADS=1: A31–A0 / ADS=0: A23–A0) 67
6.3.9 QPI Commands Dependent in 3-Byte / 4-Byte Address Mode (ADS=1: A31–A0 / ADS=0: A23–A0) 68
6.3.10 QPI Commands Dependent in 3-Byte / 4-Byte Address Mode (ADS=1: A31–A0 / ADS=0: A23–A0) 69
6.3.11 SPI DTR Commands Dependent in 3-Byte / 4-Byte Address Mode (ADS=1: A31–A0, ADS=0: A23–A0) 70
6.3.12 SPI DTR Commands Operable in Both 3-Byte and 4-Byte Address Modes 71
6.3.13 QPI DTR Commands Dependent in 3-Byte / 4-Byte Address Mode (ADS=1: A31–A0, ADS=0: A23–A0) 72
6.3.14 QPI DTR Commands Dependent in 3-Byte / 4-Byte Address Mode (ADS=1: A31–A0, ADS=0: A23–A0) 73
6.3.15 QPI DTR Commands Operable in Both 3-Byte and 4-Byte Address Modes 73
6.4 Instruction Descriptions 75
6.4.1 Write Enable (06h) 75
6.4.2 Write Enable for Volatile Status Register (50h) 75
6.4.3 Write Disable (04h) 76
6.4.4 Read Status Register-1 (05h), Status Register-2 (35h) & Status Register-3 (15h) 76
6.4.5 Write Status Register-1 (01h), Status Register-2 (31h) & Status Register-3 (11h) 77
6.4.6 Read Extended Address Register (C8h) 79
6.4.7 Write Extended Address Register (C5h) 80
6.4.8 Enter 4-Byte Address Mode (B7h) 81
6.4.9 Exit 4-Byte Address Mode (E9h) 81
6.4.10 Read Data (03h) 82

6.4.11 Read Data with 4-Byte Address (13h) ... 83
6.4.12 Fast Read (0Bh) ... 84
6.4.13 DTR Fast Read (0Dh) ... 86
6.4.14 Fast Read with 4-Byte Address (0Ch) ... 88
6.4.15 Fast Read Dual Output (3Bh) ... 89
6.4.16 Fast Read Dual Output with 4-Byte Address (3Ch) ... 90
6.4.17 Fast Read Quad Output (6Bh) ... 91
6.4.18 Fast Read Quad Output with 4-Byte Address (6Ch) ... 92
6.4.19 Fast Read Dual I/O (BBh) ... 93
6.4.20 DTR Fast Read Dual I/O (BDh) ... 95
6.4.21 Fast Read Dual I/O with 4-Byte Address (BCh) ... 97
6.4.22 Fast Read Quad I/O (EBh) ... 99
6.4.23 DTR Fast Read Quad I/O (EDh) ... 102
6.4.24 DTR Fast Read Quad I/O with 4-Byte Address (EEh) ... 105
6.4.25 Fast Read Quad I/O with 4-Byte Address (ECh) ... 106
6.4.26 Set Burst with Wrap (77h) ... 109
6.4.27 Page Program (02h) ... 110
6.4.28 Page Program with 4-Byte Address (12h) ... 112
6.4.29 Quad Input Page Program (32h) ... 113
6.4.30 Quad Input Page Program with 4-Byte Address (34h) ... 114
6.4.31 Sector Erase (20h) ... 115
6.4.32 Sector Erase with 4-Byte Address (21h) ... 116
6.4.33 32KB Block Erase (52h) ... 117
6.4.34 64KB Block Erase (D8h) ... 118
6.4.35 64KB Block Erase with 4-Byte Address (DCh) ... 119
6.4.36 Chip Erase (C7h / 60h) ... 120
6.4.37 Erase / Program Suspend (75h) ... 121
6.4.38 Erase / Program Resume (7Ah) ... 123
6.4.39 Power-down (B9h) ... 124
6.4.40 Release Power-down / Device ID (ABh) ... 125
6.4.41 Read Manufacturer / Device ID (90h) ... 127
6.4.42 Read Manufacturer / Device ID Dual I/O (92h) ... 128
6.4.43 Read Manufacturer / Device ID Quad I/O (94h) ... 129
6.4.44 Read Unique ID Number (4Bh) ... 130
6.4.45 Read JEDEC ID (9Fh) ... 131
6.4.46 Read SFDP Register (5Ah) ... 132
6.4.47 Erase Security Registers (44h) ... 134
6.4.48 Program Security Registers (42h) ... 135
6.4.49 Read Security Registers (48h) ... 136
6.4.50 Set Read Parameters (C0h) ... 137
6.4.51 Burst Read with Wrap (0Ch) ... 141
6.4.52 DTR Burst Read with Wrap (0Eh) ... 142
6.4.53 Enter QPI Mode (38h) ... 143
6.4.54 Exit QPI Mode (FFh) ... 144
6.4.55 Flex Block/Sector Lock (36h) ... 145
6.4.56 Flex Block/Sector Unlock (39h) ... 146
6.4.57 Read Flex Block/Sector Lock Bit (3Dh) ... 147
6.4.58 Global Flex Block/Sector Lock (7Eh) ... 148
6.4.59 Global Flex Block/Sector Unlock (98h) ... 148
6.4.60 Enable Reset (66h) and Reset Device (99h) ... 149
6.4.61 Clear Buffer(81h) ... 150
6.4.62 Write Buffer(82h) ... 151
6.4.63 Read Buffer(83h) ... 152
6.4.64 Program Buffer(8Ah) ... 153
6.4.65 Load Buffer(8Bh) ... 154
6.4.66 Calculate Checksum(9Dh) ... 155
6.4.67 Read Checksum (9Ch) ... 156
6.4.68 Recovery for Erase (A8h) ... 157
6.4.69 Enter Factory Mode (51h-A5h-41h) ... 158
7 ELECTRICAL CHARACTERISTICS ... 159
7.1 Absolute Maximum Ratings (1) ... 159
7.2 Operating Ranges ... 159
7.3 Power-Up Power-Down Timing and Requirements ... 160
7.4 DC Electrical Characteristics (1) ... 162

7.5 AC Measurement Conditions 165
7.6 AC Electrical Characteristics- Maximum Clock Frequencies (MHz) for Read Data 166
SPI Mode Maximum Clock Frequencies (MHz) for Read Data - *W25Q33RV/64RV/12RV* 166
SPI_DTR Mode Maximum Clock Frequencies (MHz) for Read Data - *W25Q33RV/64RV/12RV* 166
QPI Mode Maximum Clock Frequencies (MHz) for Read Data - *W25Q33RV/64RV/12RV* 167
QPI_DTR Mode Maximum Clock Frequencies (MHz) for Read Data - *W25Q33RV/64RV/12RV* 167
SPI Mode Maximum Clock Frequencies (MHz) for Read Data - *W25Q25RV/51RV/01RV/02RV* 168
SPI_DTR Mode Maximum Clock Frequencies (MHz) for Read Data- *W25Q25RV/51RV/01RV/02RV* 168
QPI Mode Maximum Clock Frequencies (MHz) for Read Data- *W25Q25RV/51RV/01RV/02RV* 169
QPI_DTR Mode Maximum Clock Frequencies (MHz) for Read Data- *W25Q25RV/51RV/01RV/02RV* 169
7.7 AC Electrical Characteristics 170
7.8 AC Electrical Characteristics Alternative Symbol table 175
7.9 Serial Output Timing 176
7.10 Serial Input Timing 176
7.11 /HOLD Timing 176
7.12 /WP Timing 176
7.13 DS Timing 177
7.14 Hardware /RESET Timing 177
7.15 /BUSY Timing 178
8 PACKAGE SPECIFICATIONS 179
8.1 8-Pin SOP 150-mil (Package Code SN/CN) 179
8.2 8-Pin SOP 208-mil (Package Code SS/CS) 180
8.3 8-Pad WSON 6x5-mm (Package Code ZP/CP) 181
8.4 8-Pad XSON 4x4x0.45-mm (Package Code XG) 182
8.5 8-Pad USON 4x3-mm (Package Code UU) 183
8.6 16-Pin SOP 300-mil (Package Code SF/CF) 184
8.7 8-Pad WSON 8x6-mm (Package Code ZE/CE) 185
8.8 24-Ball TFBGA 8x6-mm (Package Code TB/CB, 5x5-1 Ball Array) 186
8.9 8-Pad VSON 8x6-mm (Package Code ZH) 187
9 ORDERING INFORMATION 188
9.1 Valid Part Numbers and Top Side Marking 189
9.2 Initial delivery status 197
10 REVISION HISTORY 198

1 FEATURE DESCRIPTIONS

- **New Family of SpiFlash Memories**
  - The W25QxxRV includes the following products:
    - W25Q33RV:32M-bit
    - W25Q64RV:64M-bit
    - W25Q12RV:128M-bit
    - W25Q25RV:256M-bit
    - W25Q51RV:512M-bit
    - W25Q01RV:1G-bit
    - W25Q02RV: 2G-bit
  - Standard SPI: CLK, /CS, DI, DO, /WP, /Hold
  - Dual SPI: CLK, /CS, IO_0, IO_1, /WP, /Hold
  - Quad SPI: CLK, /CS, IO_0, IO_1, IO_2, IO_3
  - SPI/QPI DTR (Double Transfer Rate) Read(1)
  - 3 or 4-Byte Addressing Mode
  - Factory Mode
  - Software & Hardware Reset(2)-
- **Highest Performance Serial Flash**
  - 133MHz Standard/Dual/Quad SPI clocks
  - 266/532MHz equivalent Dual/Quad SPI
  - 66MB/S continuous data transfer rate
  - Min. 100K Program-Erase cycles
  - More than 20-year data retention
- **Low Power, Wide Temperature Range**
  - Single 2.7V to 3.6V supply
  - <0.1µA Power-down (typ.)
  - -40°C to 105°C operating range
- **Flexible Architecture with 4KB sectors**
  - Uniform Sector/Block Erase (4K/32K/64K-Byte)
  - Program 1 to 256 byte per programmable page
  - Erase/Program Suspend & Resume
- **Advanced Security Features**
  - Software and Hardware Write-Protect
  - Power Supply Lock-Down
  - Special OTP protection
  - Top/Bottom, Complement array protection
  - Flex Block/Sector array protection
  - 64-Bit Unique ID for each device
  - Discoverable Parameters (SFDP) Register
  - 3X256-Bytes Security Registers with OTP locks
  - Volatile & Non-volatile Status Register Bits
- **Space Efficient Packaging**
  - 8-pin SOP 150-mil / 208-mil
  - 8-pad XSON 4x4x0.45mm
  - 8-pad USON 4x3mm
  - 8-pad WSON 6x5-mm
  - 8-pad WSON/VSON 8x6-mm
  - 16-pin SOP 300-mil (additional /RESET pin)
  - 24-ball TFBGA 8x6-mm(5x5 ball array)
  - Contact Winbond for KGD and other options
- **Preliminary AC/DC Characteristics**
  - W25Q25RV

Note:

1. The SPI DTR and QPI DTR instructions are only supported with Part Number Suffix “M”
2. Hardware /RESET pin is only available on TFBGA or SOP16 packages
3. Please contact Winbond for other packages.

2 PACKAGE TYPES AND PIN CONFIGURATIONS

2.1 Pin Configuration SOP 150/208-mil

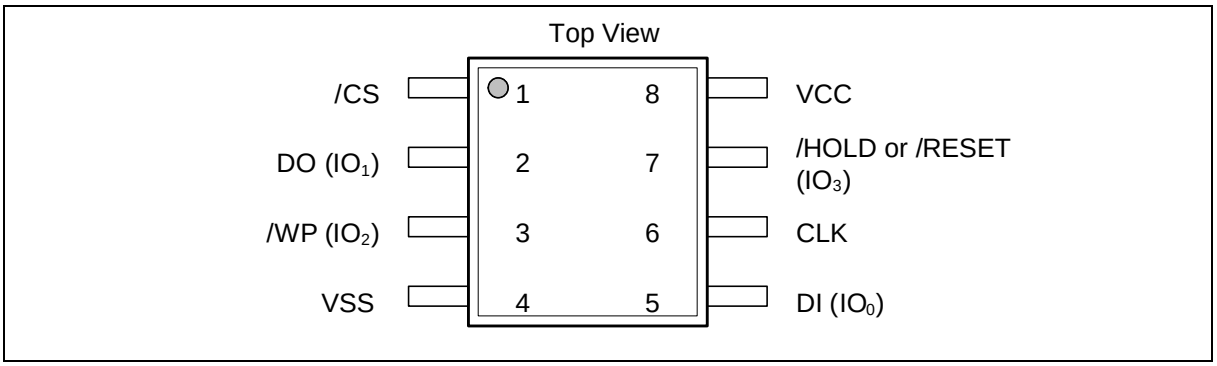

Figure 2.1. Pin Assignments, 8-pin SOP 150,208-mil (Package Code SN/CN, SS/CS)

2.2 Pad Configuration XSON 4x4-mm, USON 4X3mm, WSON 6x5-mm, 8x6-mm,VSON 8x6mm

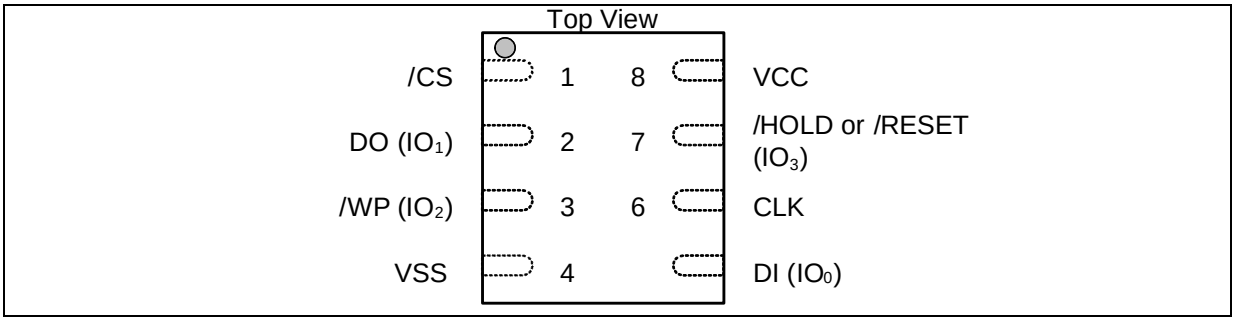

Figure 2.2. Pad Assignments, XSON 4x4-mm, USON 4X3mm, WSON 6x5(Package Code XG,UU,ZP/CP, ZH) Pad Assignments, WSON 8x6-mm (Package ZE/CE)

2.3 Pad Description for Package Code: SN, CN, SS, CS, XG, UU, ZP, CP, ZE, CE

PAD NO.	PAD NAME	I/O	FUNCTION
1	/CS	I	Chip Select Input
2	DO (IO1)	I/O	Data Output (Data Input Output 1)(1)
3	/WP (IO2)	I/O	Write Protect Input (Data Input Output 2)(2)
4	GND		Ground
5	DI (IO0)	I/O	Data Input (Data Input Output 0)(1)
6	CLK	I	Serial Clock Input
7	/HOLD or /RESET (IO3)	I/O	Hold or Reset Input (Data Input Output 3)(2)
8	VCC		Power Supply

Note:

1. IO0 and IO1 are used for Standard and Dual SPI instructions
2. IO0 – IO3 are used for Quad SPI instructions, /HOLD (or /RESET) functions are only available for Standard/Dual SPI..

2.4 Pin Configuration SOP 300-mil

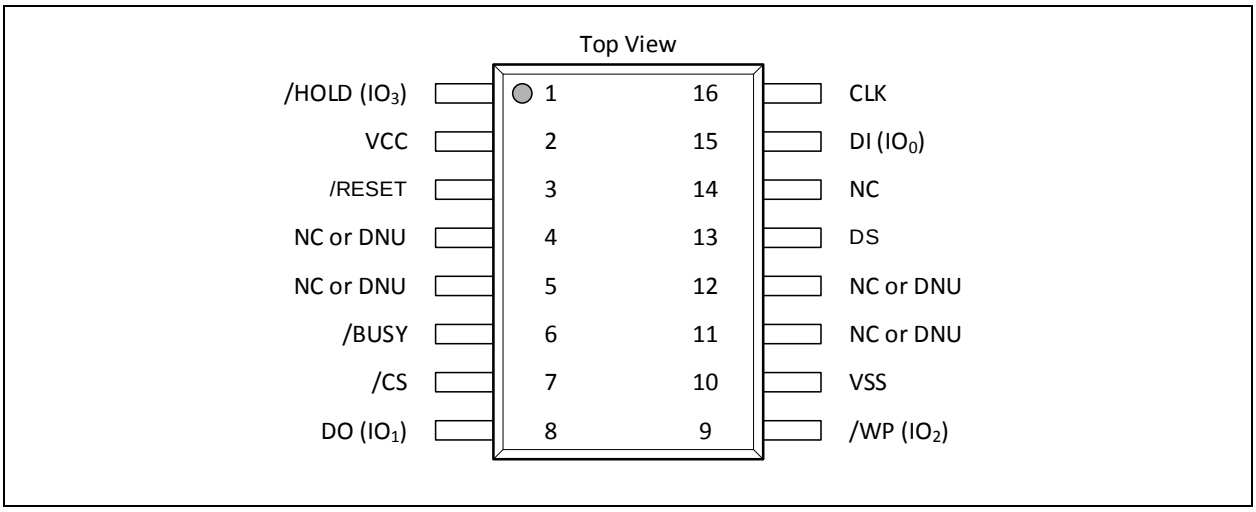

Figure 2.4. Pin Assignments, 16-pin SOP 300-mil (Package Code SF/CF)

2.5 Pin Description for Package Code SF, CF

PIN NO.	PIN NAME	I/O	FUNCTION	
1	/HOLD or (IO3)	I/O	Hold (Data Input Output 3)(2)	
2	VCC		Power Supply	
3	/RESET	I	Reset Input(3)	
4	N/C, DNU		No Connect(4)	Don't Use(5)
5	N/C, DNU		No Connect(4)	Don't Use(5)
6	/BUSY	O	Reset Output	
7	/CS	I	Chip Select Input	
8	DO (IO1)	I/O	Data Output (Data Input Output 1)(1)	
9	/WP (IO2)	I/O	Write Protect Input (Data Input Output 2)(2)	
10	VSS		Ground	
11	DNU		Don't Use	
12	N/C, DNU		No Connect(4)	Don't Use(5)
13	DS	O	Data Strobe	
14	N/C		No Connect	
15	DI (IO0)	I/O	Data Input (Data Input Output 0)(1)	
16	CLK	I	Serial Clock Input	

Note:

1. IO0 and IO1 are used for Standard and Dual SPI instructions
2. IO0 – IO3 are used for Quad SPI instructions, /HOLD (or /RESET) functions are only available for Standard/Dual SPI.
3. The /RESET pin on SOP-16 package is a dedicated hardware reset pin regardless of device settings. If the reset function is not used, this pin can be left floating in the system.
4. For W25Q12RV, W25Q25RV.
5. For W25Q51RV, W25Q01RV and W25Q02RV

2.6 Ball Configuration TFBGA 8x6-mm (5x5 Ball Array)

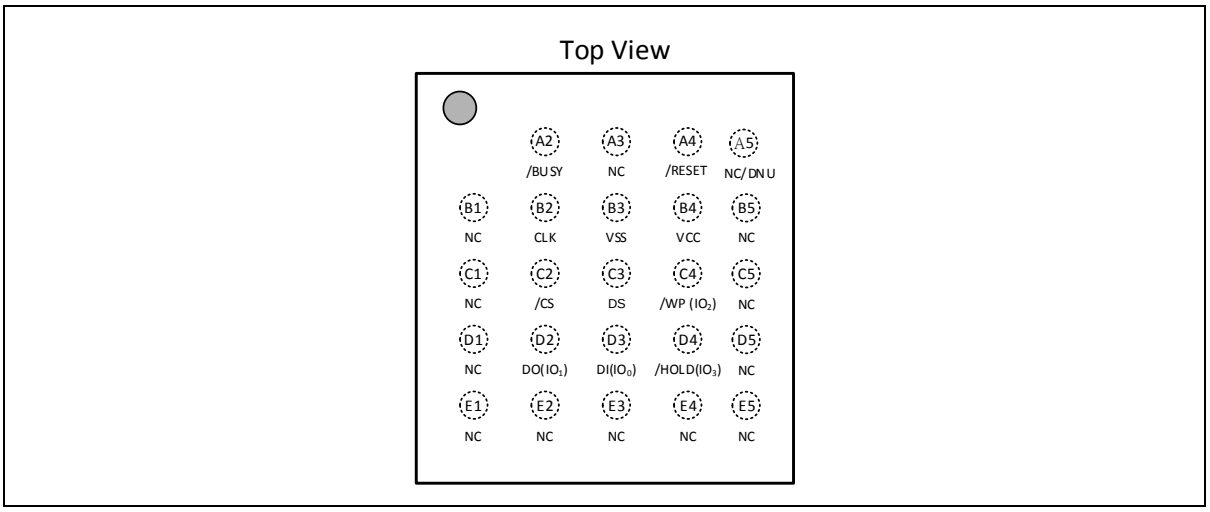

Figure 2.6. W25Q51RV/01RV/02RV Ball Assignments, 24-ball TFBGA 8x6-mm (Package Code TB/CB)

2.7 Ball Description for Package Code TB, CB

BALL NO.	PIN NAME	I/O	FUNCTION
A2	/BUSY	O	Reset Output
A4	/RESET	I	Reset Input(3)
A5	DNU		Don't Use
B2	CLK	I	Serial Clock Input
B3	VSS		Ground
B4	VCC		Power Supply
C2	/CS	I	Chip Select Input
C3	DS	O	Data Strobe Output
C4	/WP (IO2)	I/O	Write Protect Input (Data Input Output 2)(2)
D2	DO (IO1)	I/O	Data Output (Data Input Output 1)(1)
D3	DI (IO0)	I/O	Data Input (Data Input Output 0)(1)
D4	/HOLD (IO3) /RESET	I/O	Hold or Reset Input (Data Input Output 3)(2)
Multiple	NC		No Connect

Note:

1. IO0 and IO1 are used for Standard and Dual SPI instructions
2. IO0 – IO3 are used for Quad SPI instructions (factory default for Quad Enabled part numbers with ordering option "IQ").
3. The /RESET pin is a dedicated hardware reset pin regardless of device settings or operation states. If the hardware reset function is not used, this pin can be left floating or connected to VCC in the system.

3 PIN DESCRIPTIONS

3.1 Chip Select (/CS)

The SPI Chip Select (/CS) pin enables and disables device operation. When /CS is high the device is deselected and the Serial Data Output (DO, or IO0, IO1, IO2, IO3) pins are at high impedance. When deselected, the devices power consumption will be at standby levels unless an internal erase, program or write status register cycle is in progress. When /CS is brought low, the device will be selected, power consumption will increase to active levels, and instructions can be written to and data read from the device. After power-up, /CS must transition from high to low before a new instruction will be accepted. The /CS input must track the VCC supply level at power-up and power-down (see “Write Protection” and Figure 58). If needed, a pull-up resistor on the /CS pin can be used to accomplish this.

3.2 Serial Data Input, Output and IOs (DI, DO and IO0, IO1, IO2, IO3)

The W25QxxRV supports standard SPI, Dual SPI and Quad SPI operation. Standard SPI instructions use the unidirectional DI (input) pin to serially write instructions, addresses or data to the device on the rising edge of the Serial Clock (CLK) input pin. Standard SPI also uses the unidirectional DO (output) to read data or status from the device on the falling edge of CLK.

Dual and Quad SPI instructions use the bidirectional IO pins to serially write instructions, addresses or data to the device on the rising edge of CLK and read data or status from the device on the falling edge of CLK. Quad SPI instructions require the non-volatile Quad Enable bit (QE) in Status Register-2 to be set. When QE=1, the /HOLD pin becomes IO3.

3.3 Write Protect (/WP)

The Write Protect (/WP) pin can be used to prevent the Status Register from being written. Used in conjunction with the Status Register’s Block Protect (CMP, TB, BP3, BP2, BP1 and BP0) bits and Status Register Protect (SRP) bits, a portion as small as a 4KB sector or the entire memory array can be hardware protected. The /WP pin is active low. When the QE bit of Status Register-2 is set for Quad I/O, the /WP pin function is not available since this pin is used for IO2. See Figure 2.x for the pin configuration of Quad I/O operation.

3.4 HOLD (/HOLD)

The /HOLD pin allows the device to be paused while it is actively selected. When /HOLD is brought low, while /CS is low, the DO pin will be at high impedance and signals on the DI and CLK pins will be ignored (don’t care). When /HOLD is brought high, device operation can resume. The /HOLD function can be useful when multiple devices are sharing the same SPI signals. The /HOLD pin is active low. When the QE bit of Status Register-2 is set for Quad I/O, the /HOLD pin function is not available since this pin is used for IO3. See Figure 2.x for the pin configuration of Quad I/O operation.

3.5 Serial Clock (CLK)

The SPI Serial Clock Input (CLK) pin provides the timing for serial input and output operations. ("See SPI Operations")

3.6 Reset (/RESET)

The /RESET pin allows the device to be reset by the controller. For 8-pin packages, when QE=0, the IO3 pin can be configured either as a /HOLD pin or as a /RESET pin depending on Status Register setting. When QE=1, the /HOLD or /RESET function is not available for 8-pin configuration.

A dedicated hardware /RESET pin is available on SOP-16 and TFBGA packages. When it's driven low for a minimum period of ~1µS, this device will terminate any external or internal operations and return to its power-on state.

3.7 BUSY (/BUSY)

The /BUSY pin is provided to the system hardware designers to determine if the flash device is busy performing device initialization or internal reset. The /BUSY pin will be pulled low through the Open-Drain connection during the device power-on-reset (POR) period, as well as the device reset period (tRST) triggered by either software reset command or the hardware /RESET pin. While the /BUSY pin is pulled low internally, no command will be accepted by the device.

3.8 Data Strobe (DS)

The Data Strobe (DS) pin is required to support DDR clock speeds higher than 84MHz. It is an output signal that aids in validating and synchronizing data output for the host at higher clock speeds. The DS pin is used during read operations, and it is not used during program, erase, or write operations.

When the DS pin is enabled, the device drives the DS output pin low from a high impedance state after /CS pin is asserted and the first input clock is shifted in. As the read instruction sequence continues, the IO pins transition from input to data output sequence At the same time, the DS pin toggles simultaneously to synchronize every data output transition on either the falling edge of the clock during extended SPI or both edges of the clock during DDR. Once /CS pin is driven high after a read sequence, the DS pin goes back to the high impedance state.

The DS pin is not driven and is in the high impedance when it is enable/disabled by the DSEN bit in Status Register-3.

This functionality is applicable across SPI, QPI, and DDR modes and provides robust support for high-speed data read operations.

4 BLOCK DIAGRAM

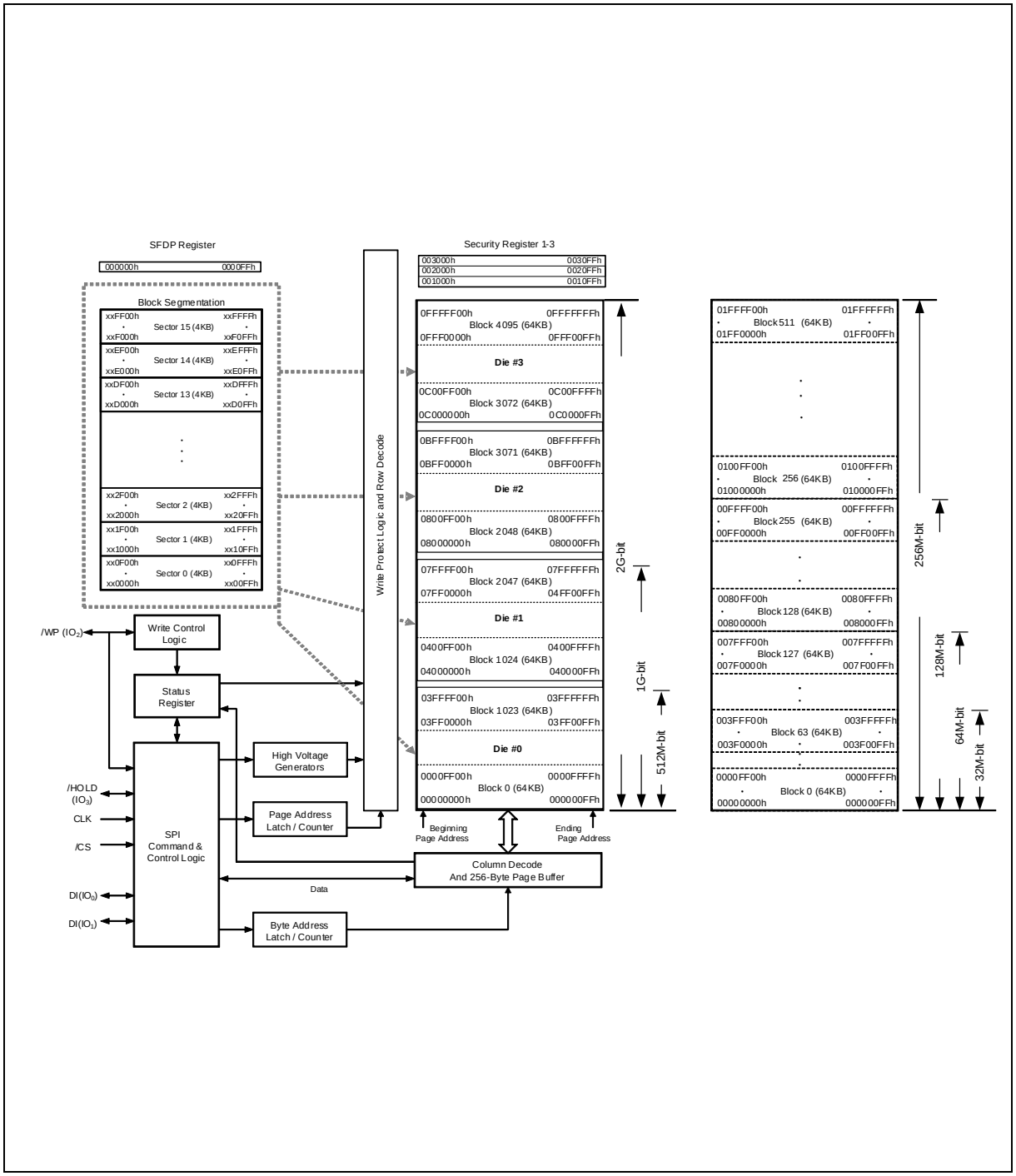

Figure 4 W25QxxRV Serial Flash Memory Block Diagram

5 FUNCTIONAL DESCRIPTIONS

5.1 SPI / QPI Operations

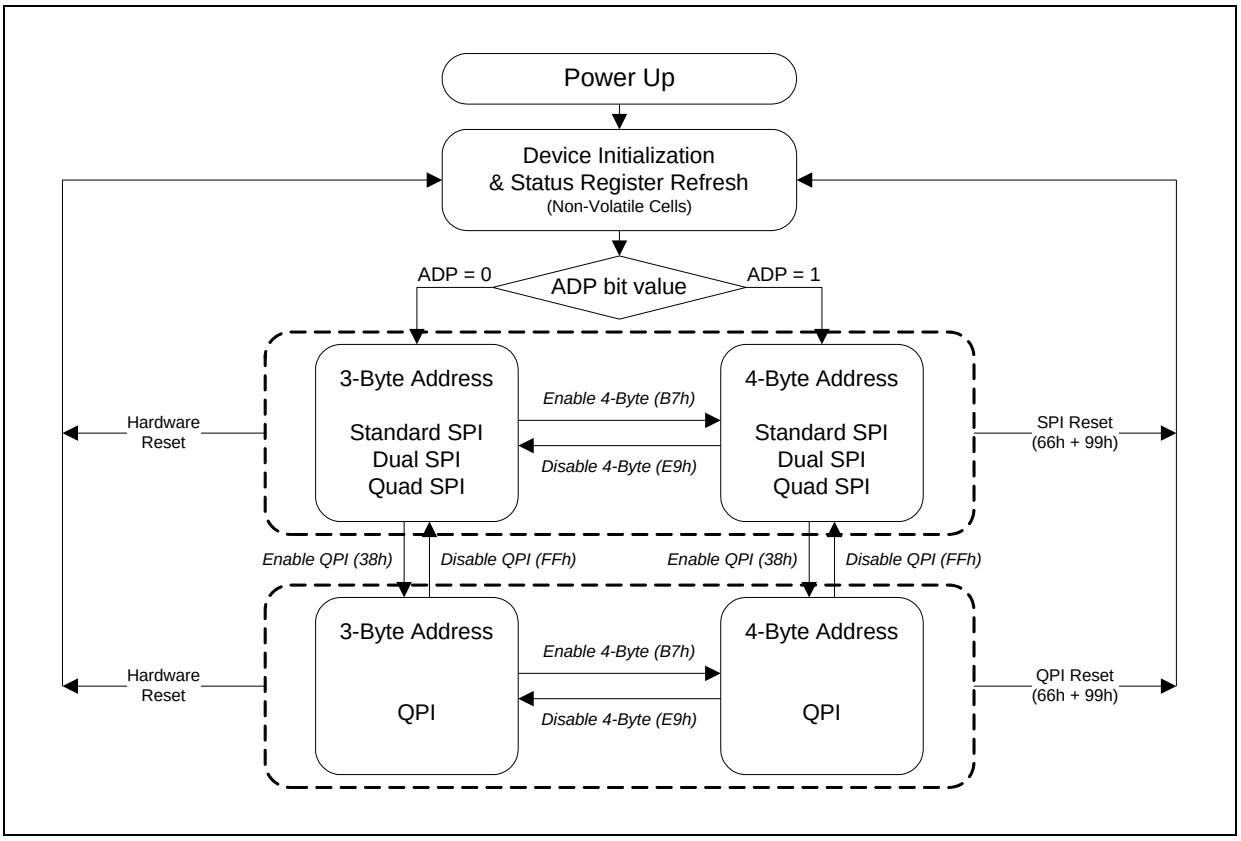

Figure 5.1 W25QxxRV Serial Flash Memory Operation Diagram

5.1.1 Standard SPI Instructions

The W25QxxRV is accessed through an SPI compatible bus consisting of four signals: Serial Clock (CLK), Chip Select (/CS), Serial Data Input (DI) and Serial Data Output (DO). Standard SPI instructions use the DI input pin to serially write instructions, addresses or data to the device on the rising edge of CLK. The DO output pin is used to read data or status from the device on the falling edge of CLK.

SPI bus operation Mode 0 (0,0) and 3 (1,1) are supported. The primary difference between Mode 0 and Mode 3 is the normal state of the CLK signal when the SPI bus master is in standby, and data is not being transferred to the Serial Flash. For Mode 0, the CLK signal is normally low on the falling and rising edges of /CS. For Mode 3, the CLK signal is normally high on the falling and rising edges of /CS.

5.1.2 Dual SPI Instructions

The W25QxxRV supports Dual SPI operation when using instructions such as “Fast Read Dual Output (3Bh)” and “Fast Read Dual I/O (BBh)”. These instructions allow data to be transferred to or from the device at two to three times the rate of ordinary Serial Flash devices. The Dual SPI Read instructions are ideal for quickly downloading code to RAM upon power-up (code-shadowing) or for executing non-speed-critical code directly from the SPI bus (XIP). When using Dual SPI instructions, the DI and DO pins become bidirectional I/O pins: IO0 and IO1.

5.1.3 Quad SPI Instructions

The W25QxxRV supports Quad SPI operation when using instructions such as “Fast Read Quad Output (6Bh)”, and “Fast Read Quad I/O (EBh)”. These instructions allow data to be transferred to or from the

device four to six times the rate of ordinary Serial Flash. The Quad Read instructions offer a significant improvement in continuous and random access transfer rates allowing fast code-shadowing to RAM or execution directly from the SPI bus (XIP). When using Quad SPI instructions, the DI and DO pins become bidirectional IO0 and IO1, and the /WP and /HOLD pins become IO2 and IO3 respectively. Quad SPI instructions require the non-volatile Quad Enable bit (QE) in Status Register-2 to be set.

5.1.4 QPI Instructions

The W25QxxRV supports Quad Peripheral Interface (QPI) operations only when the device is switched from Standard/Dual/Quad SPI mode to QPI mode using the “Enter QPI (38h)” instruction. The typical SPI protocol requires that the byte-long instruction code being shifted into the device only via DI pin in eight serial clocks. The QPI mode utilizes all four IO pins to input the instruction code, thus only two serial clocks are required. This can significantly reduce the SPI instruction overhead and improve system performance in an XIP environment. Standard/Dual/Quad SPI mode and QPI mode are exclusive. Only one mode can be active at any given time. “Enter QPI (38h)” and “Exit QPI (FFh)” instructions are used to switch between these two modes. Upon power-up or after a software reset using “Reset (99h)” instruction, the default state of the device is Standard/Dual/Quad SPI mode. To enable QPI mode, the non-volatile Quad Enable bit (QE) in Status Register-2 is required to be set. When using QPI instructions, the DI and DO pins become bidirectional IO0 and IO1, and the /WP and /HOLD pins become IO2 and IO3 respectively. See Figure 4 for the device operation modes.

5.1.5 SPI / QPI DTR Read Instructions

To effectively improve the read operation throughput without increasing the serial clock frequency, the W25QxxRV introduces multiple DTR (Double Transfer Rate) Read instructions that support Standard/Dual/Quad SPI and QPI modes. The byte-long instruction code is still latched into the device on the rising edge of the serial clock similar to all other SPI/QPI instructions. Once a DTR instruction code is accepted by the device, the address input and data output will be latched on both rising and falling edges of the serial clock.

The SPI DTR and QPI DTR instructions are only supported with Part Number Suffix “M”

5.1.6 3-Byte / 4-Byte Address Modes

The W25QxxRV provide two Address Modes that can be used to specify any byte of data in the memory array. The 3-Byte Address Mode is backward compatible to older generations of serial flash memory that only support up to 128M-bit data. To address the 256/512M-bit in 3-Byte Address Mode, Extended Address Register must be used in addition to the 3-Byte addresses.

4-Byte Address Mode is designed to support Serial Flash Memory devices from 256M-bit to 2G-bit. The extended Address Register is not necessary when the 4-Byte Address Mode is enabled.

Upon power up, the W25QxxRV can operate in either 3-Byte Address Mode or 4-Byte Address Mode, depending on the Non-Volatile Status Register Bit ADP (S17) setting. If ADP=0, the device will operate in 3-Byte Address Mode; if ADP=1, the device will operate in 4-Byte Address Mode. The factory default value for ADP is 0.

To switch between the 3-Byte or 4-Byte Address Modes, “Enter 4-Byte Mode (B7h)” or “Exit 4-Byte Mode (E9h)” instructions must be used. The current address mode is indicated by the Status Register Bit ADS (S16).

The W25QxxRV also supports a set of basic SPI instructions which requires dedicated 4-Byte address regardless of the device Address Mode setting. Please refer to the Instruction Set Tables for details.

5.1.7 Hold Function

For Standard SPI and Dual SPI operations, the /HOLD signal allows the W25QxxRV operation to be paused while it is actively selected (when /CS is low). The /HOLD function may be useful in cases where the SPI data and clock signals are shared with other devices. For example, consider if the page buffer was only partially written when a priority interrupt required use of the SPI bus. In this case, the /HOLD function can save the state of the instruction and the data in the buffer, so programming can resume where it left off once the bus is available again. The /HOLD function is only available for standard SPI and Dual SPI operation, not during Quad SPI. The Quad Enable Bit QE in Status Register-2 is used to determine if the pin is used as /HOLD pin or data I/O pin. When QE=0 (factory default), the pin is /HOLD. When QE=1, the pin will become an I/O pin, and the /HOLD function is no longer available.

To initiate a /HOLD condition, the device must be selected with /CS low. A /HOLD condition will activate on the falling edge of the /HOLD signal if the CLK signal is already low. If the CLK is not already low, the /HOLD condition will activate after the next falling edge of CLK. The /HOLD condition will terminate on the rising edge of the /HOLD signal if the CLK signal is already low. If the CLK is not already low, the /HOLD condition will terminate after the next falling edge of CLK. During a /HOLD condition, the Serial Data Output (DO) is high impedance, and Serial Data Input (DI) and Serial Clock (CLK) are ignored. The Chip Select (/CS) signal should be kept active (low) for the full duration of the /HOLD operation to avoid resetting the internal logic state of the device.

5.1.8 Software Reset & Hardware /RESET pin

The W25QxxRV can be reset to the initial power-on state by a software Reset sequence, either in SPI mode or QPI mode. This sequence must include two consecutive commands: Enable Reset (66h) & Reset (99h). If the command sequence is successfully accepted, the device will take approximately 30uS (t_{RST}) to reset. No command will be accepted during the reset period.

For the WSON-8 package types, W25QxxRV can also be configured to utilize a hardware /RESET pin. The HOLD/RST bit in the Status Register-3 is the configuration bit for /HOLD pin function or /RESET pin function. When HOLD/RST=0 (factory default), the pin acts as a /HOLD pin as described above; when HOLD/RST=1, the pin acts as a /RESET pin. Driving the /RESET pin low for a minimum period of ~1µs (tRESET*) will reset the device to its initial power-on state. Any on-going Program/Erase operation will be interrupted, and data corruption may happen. While /RESET is low, the device will not accept any command inputs.

If QE bit is set to 1, the /HOLD or /RESET function will be disabled, and the pin will become one of the four data I/O pins.

For the SOP-16 & TFBGA package, W25QxxRV provides a dedicated /RESET pin in addition to the /HOLD (IO_3) pin as illustrated in Figure 2.4. Driving the /RESET pin low for a minimum period of ~1µs (tRESET*) will reset the device to its initial power-on state. The HOLD/RST bit or the QE bit in the Status Register will not affect the function of this dedicated /RESET pin.

The Hardware /RESET pin has the highest priority among all the input signals. Driving /RESET low for a minimum period of ~1us (tRESET*) will interrupt any on-going external/internal operations, regardless the status of other SPI signals (/CS, CLK, IOs, /WP and/or /HOLD).

Note:

1. While a faster /RESET pulse (as short as a few hundred nanoseconds) will often reset the device, a 1us minimum pulse is recommended to ensure reliable operation.
2. There is an internal pull-up resistor for the dedicated /RESET pin on the SOP-16 & TFBGA package. If the reset function is not used, this pin can be left floating in the system.

5.1.9 Reset Signaling Protocol

The W25QxxRV provides additional Hardware Reset by a signaling protocol. The key points for the Reset Signaling Protocol are CLK remains stable in either High or Low state. Toggle /CS instead of CLK. This prevents any confusion with a command, as no command bits are transferred (clocked). W25QxxRV captures the state of DI(IO0) on the rising edge of /CS. DI(IO0) have to be low on the first /CS, high on the second, low on the third, high on the fourth. This 05h pattern (=0b0101) is for differentiate from random noise. The hardware reset by signaling protocol release the deep power down state.

Once the Reset Signaling Protocol is accepted, any on-going internal operations will be terminated and will reset the device to its initial power-on state. It takes same busy time with power-on (tVSL and tPUW) because Hardware Reset goes into the same state of after power-on. No command will be accepted during the tVSL period. Please refer to “7.2.1 Device Reset (FFh), Enable Reset (66h) and Reset Device (99h)” for detail information about the value of each Status Registers after reset. If there is an on-going internal Erase or Program operation when Reset command sequence is accepted by the device, data corruption may happen at only the address that is the target of the on-going operation. It is recommended to check the BUSY bit in Status Register before issuing the Reset command.

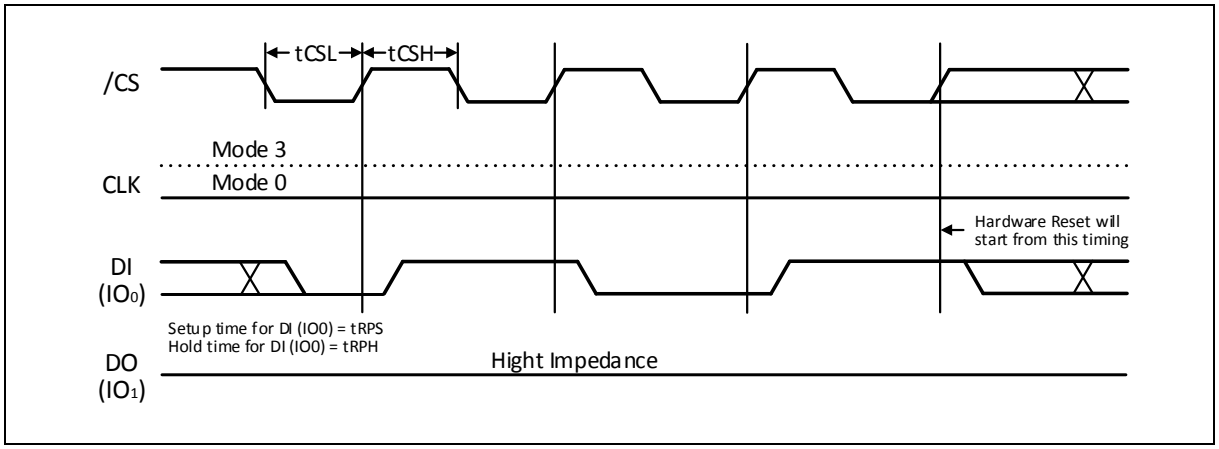

Figure 5.1.9. Reset Signaling Protocol

5.2 Write Protection

Applications that use non-volatile memory must take into consideration the possibility of noise and other adverse system conditions that may compromise data integrity. To address this concern, the W25QxxRV provides several means to protect the data from inadvertent writes.

- Device resets when VCC is below threshold
- Time delay write disable after Power-up
- Write enable/disable instructions and automatic write disable after erase or program
- Software and Hardware (/WP pin) write protection using Status Registers
- Additional Flex Block/Sector Locks for array protection
- Write Protection using Power-down instruction
- Lock Down write protection for Status Register until the next power-up
- One Time Program (OTP) write protection for array and Security Registers using Status Register*

*** Note: This OTP feature is available upon special flow. Please contact Winbond for details**.

Upon power-up or at power-down, the W25QxxRV will maintain a reset condition while VCC is below the threshold value of V_{WI}, (7.3 Power-Up Power-Down Timing and Requirements). While reset, all operations are disabled, and no instructions are recognized. During power-up and after the VCC voltage exceeds V_{WI}, all program and erase related instructions are further disabled for a time delay of t_{PUW}. This includes the Write Enable, Page Program, Sector Erase, Block Erase, Chip Erase and the Write Status Register instructions. Note that the chip select pin (/CS) must track the VCC supply level at power-up until the VCC-min level and t_{VSL} time delay is reached, and it must also track the VCC supply level at power-down to prevent adverse command sequence. If needed, a pull-up resistor on /CS pin can be used to accomplish this.

After power-up, the device is automatically placed in a write-disabled state with the Status Register Write Enable Latch (WEL) set to a 0. A Write Enable instruction must be issued before a Page Program, Sector Erase, Block Erase, Chip Erase or Write Status Register instruction will be accepted. After completing a program, erase or write instruction, the Write Enable Latch (WEL) is automatically cleared to a write-disabled state of 0.

Software controlled write protection is facilitated using the Write Status Register instruction and setting the Status Register Protect (SRP, SRL) and Block Protect (CMP, TB, BP[3:0]) bits. These settings allow a portion or the entire memory array to be configured as read only. Used in conjunction with the Write Protect (/WP) pin, changes to the Status Register can be enabled or disabled under hardware control. See the Status Register section for further information. Additionally, the Power-down instruction offers an extra level of write protection as all instructions are ignored except for the Release Power-down instruction.

The W25Q also provides an additional Write Protect method through the use of Flex Block/Sector Locks. Each 64KB block and each 4KB sector within the top and bottom blocks (totaling 32 sectors) is equipped with a Flex Block/Sector Lock bit. When the lock bit is set to 0, the corresponding sector or block can be erased or programmed; when the lock bit is set to 1, any Erase or Program command issued to that sector or block will be ignored. Upon power-up, software reset and hardware reset, if the WPS bit in status register 3 value is set to 0, all Flex Block/Sector Lock bits are initialized to 0. Upon power-up, software reset and hardware reset, if the WPS bit in status register 3 value is set to 1, all Flex Block/Sector Lock bits are initialized to 1, thereby protecting the entire memory array from Erase/Program operations. To unlock a specific sector or block, the “Flex Block/Sector Unlock (39h)” instruction must be issued.

When WPS bit is set to 0, the Flex block lock settings are active. This configuration is referred to as Flex Protection, which combines Flex Block/Sector Lock with Block Protect mechanisms (CMP, TB, BP[3:0]) to enable more flexible and fine-grained control overwrite protection.

When WPS bit is set to 1, only the Block Lock setting is active.

Please refer to the table below for the number of lockable blocks and sectors available in each device model:

Part No.	Density	Flex Block/Sector Locks
W25Q33RV	32M-bit	62 blocks (64KB each) + 32 sectors (4KB each)
W25Q64RV	64M-bit	126 blocks (64KB each) + 32 sectors (4KB each)
W25Q12RV	128M-bit	254 blocks (64KB each) + 32 sectors (4KB each)
W25Q25RV	256M-bit	510 blocks (64KB each) + 32 sectors (4KB each)
W25Q51RV	512M-bit	1022 blocks (64KB each) + 32 sectors (4KB each)
W25Q01RV	1G-bit	[1022 blocks (64KB each) + 32 sectors (4KB each)] x 2
W25Q02RV	2G-bit	[1022 blocks (64KB each) + 32 sectors (4KB each)] x 4

5.3 Status and Configuration Registers

Three Status and Configuration Registers are provided for the W25QxxRV series. The Read Status Register-1/2/3 instructions can be used to provide status on the availability of the flash memory array, whether the device is written enabled or disabled, the state of write protection, Quad SPI setting, Security Register lock status, Erase/Program Suspend status, output driver strength, power-up and current Address Mode. The Write Status Register instruction can be used to configure the device write protection features, Quad SPI setting, Security Register OTP locks, Hold/Reset functions, DSEN, output driver strength and power-up Address Mode. Write access to the Status Register is controlled by the state of the non-volatile Status Register Protect bits (SRP, SRL), the Write Enable instruction, and during Standard/Dual SPI operations, the /WP pin. The Extended Address Register stores the 4th Byte Address (most significant byte) in 3-Byte Address mode operation to access the full 256Mb address range.

5.3.1 Status Registers

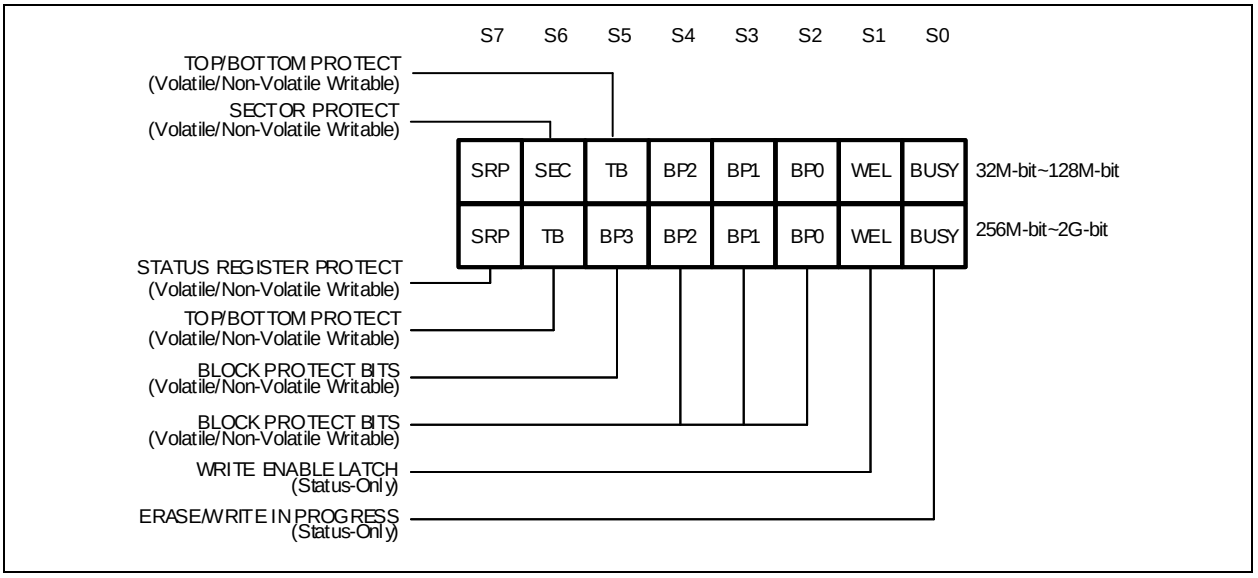

Figure 5.4.1. Status Register-1

5.3.2 Program/Erase/Write In Progress (BUSY) – *Status Only*

BUSY is a read only bit in the status register (S0) that is set to a 1 state when the device is executing a Page Program, Quad Page Program, Sector Erase, Block Erase, Chip Erase, Write Status Register or Erase/Program Security Register instruction. During this time, the device will ignore further instructions except for the Read Status Register and Erase/Program Suspend instruction (see t_W, t_{PP}, t_{SE}, t_{BE}, and t_{CE} in AC Characteristics). When the program, erase or write status/security register instruction has completed, the BUSY bit will be cleared to a 0 state indicating the device is ready for further instructions. Read Status Register instruction can always be used to poll the BUSY status during internal operations to determine if the operation has finished.

5.3.3 Write Enable Latch (WEL) – *Status Only*

Write Enable Latch (WEL) is a read only bit in the status register (S1) that is set to 1 after executing a Write Enable Instruction. The WEL status bit is cleared to 0 when the device is write disabled. A write disable state occurs upon power-up or after any of the following instructions: Write Disable, Page Program, Quad Page Program, Sector Erase, Block Erase, Chip Erase, Write Status Register, Erase Security Register and Program Security Register.

5.3.4 Block Protect Bits (BP3, BP2, BP1, BP0) – *Volatile/Non-Volatile Writable*

The Block Protect Bits (BP3, BP2, BP1, BP0) are non-volatile read/write bits in the status register (S5, S4, S3, and S2) that provide Write Protection control and status. Block Protect bits can be set using the Write

Status Register Instruction (see tw in AC characteristics). All, none or a portion of the memory array can be protected from Program and Erase instructions (see Status Register Memory Protection table). The factory default setting for the Block Protection Bits is 0, none of the array protected.

5.3.5 Top/Bottom Block Protect (TB) – *Volatile/Non-Volatile Writable*

The non-volatile Top/Bottom bit (TB) controls if the Block Protect Bits (BP3, BP2, BP1, BP0) protect from the Top (TB=0) or the Bottom (TB=1) of the array as shown in the Status Register Memory Protection table. The factory default setting is TB=0. The TB bit can be set with the Write Status Register Instruction depending on the state of the SRP, SRL and WEL bits.

5.3.6 Complement Protect (CMP) – Volatile/Non-Volatile Writable

The Complement Protect bit (CMP) is a non-volatile read/write bit in the status register (S14). It is used in conjunction with TB, BP3, BP2, BP1 and BP0 bits to provide more flexibility for the array protection. Once CMP is set to 1, previous array protection set by TB, BP3, BP2, BP1 and BP0 will be reversed. For instance, when CMP=0, a top 64KB block can be protected while the rest of the array is not; when CMP=1, the top 64KB block will become unprotected while the rest of the array become read-only. Please refer to the Status Register Memory Protection table for details. The default setting is CMP=0.

5.3.7 Sector/Block Protect Bit (SEC) – *Volatile/Non-Volatile Writable*

The non-volatile Sector/Block Protect bit (SEC) controls if the Block Protect Bits (BP2, BP1, BP0) protect either 4KB Sectors (SEC=1) or 64KB Blocks (SEC=0) in the Top (TB=0) or the Bottom (TB=1) of the array as shown in the Status Register Memory Protection table. The default setting is SEC=0.

5.3.8 Status Register Protect (SRP, SRL) – *Volatile/Non-Volatile Writable*

The Status Register Protect bits (SRP) are non-volatile read/write bits in the status register (S7). The SRP bit controls the method of write protection: software protection or hardware protection. The Status Register Lock bits (SRL) are non-volatile/volatile read/write bits in the status register (S8). The SRL bit controls the method of write protection: temporary lock-down or permanently one time program.

SRL	SRP	/WP	Status Register	Description
0	0	X	Software Protection	/WP pin has no control. The Status register can be written to after a Write Enable instruction, WEL=1. [Factory Default]
0	1	0	Hardware Protected	When /WP pin is low the Status Register locked and cannot be written to.
0	1	1	Hardware Unprotected	When /WP pin is high the Status register is unlocked and can be written to after a Write Enable instruction, WEL=1.
1	X	X	Power Supply Lock-Down	Status Register is protected and cannot be written to again until the next power-down, power-up cycle.(1)
1	X	X	One Time Program(2)	Status Register is permanently protected and cannot be written to. (**enabled by adding prefix command AAh, 55h)**

Note:
1. When SRL =1, a power-down, power-up cycle will change SRL =0 state.
2. Please contact Winbond for details regarding the special instruction sequence.

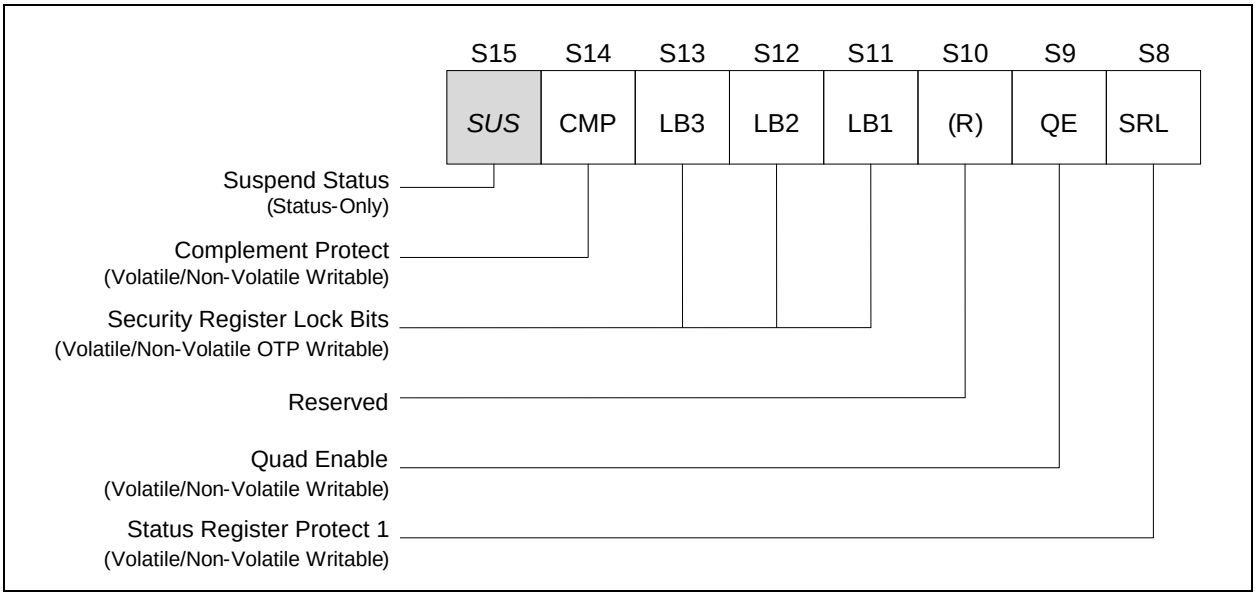

Figure 5.3.9. Status Register-2

5.3.9 Erase/Program Suspend Status (SUS) – *Status Only*

The Suspend Status bit is a read only bit in the status register (S15) that is set to 1 after executing a Erase/Program Suspend (75h) instruction. The SUS status bit is cleared to 0 by the Erase/Program Resume (7Ah) instruction as well as a power-down, power-up cycle.

5.3.10 Security Register Lock Bits (LB3, LB2, LB1, SFDP Lock) –*Non-Volatile OTP Writable*

The Security Register Lock Bits (LB3, LB2, LB1, SFDP Lock Bit) are non-volatile One Time Program (OTP) bits in Status Register (S13, S12, S11,S10) that provide the write protect control and status to the Security Registers. The default state of LB [3:1] is 0, Security Registers are unlocked. LB [3:1] can be set to 1 individually using the Write Status Register instruction. LB [3:1] are One Time Programmable (OTP). Once it's set to 1, the corresponding 256-Byte Security Register will become read-only permanently.

5.3.11 Quad Enable (QE) – Volatile/Non-Volatile Writable

The Quad Enable (QE) bit is a non-volatile read/write bit in the status register (S9) that enables Quad SPI operation. When the QE bit is set to a 0 state (factory default for part numbers with ordering options"-M"), the /WP pin and /HOLD are enabled, and the device operates in Standard/Dual SPI modes. When the QE bit is set to a 1((factory default for part numbers with ordering options"-Q"), the Quad IO2 and IO3 pins are enabled, and /WP and /HOLD functions are disabled, the device operates in Standard/Dual/Quad SPI modes.

The QE bit is required to be set to a 1 before issuing an "Enter QPI (38h)" to switch the device from Standard/Dual/Quad SPI to QPI, otherwise the command will be ignored. When the device is in QPI mode, QE bit will remain a 1. A "Write Status Register" command in QPI mode cannot change the QE bit from a "1" to a "0".

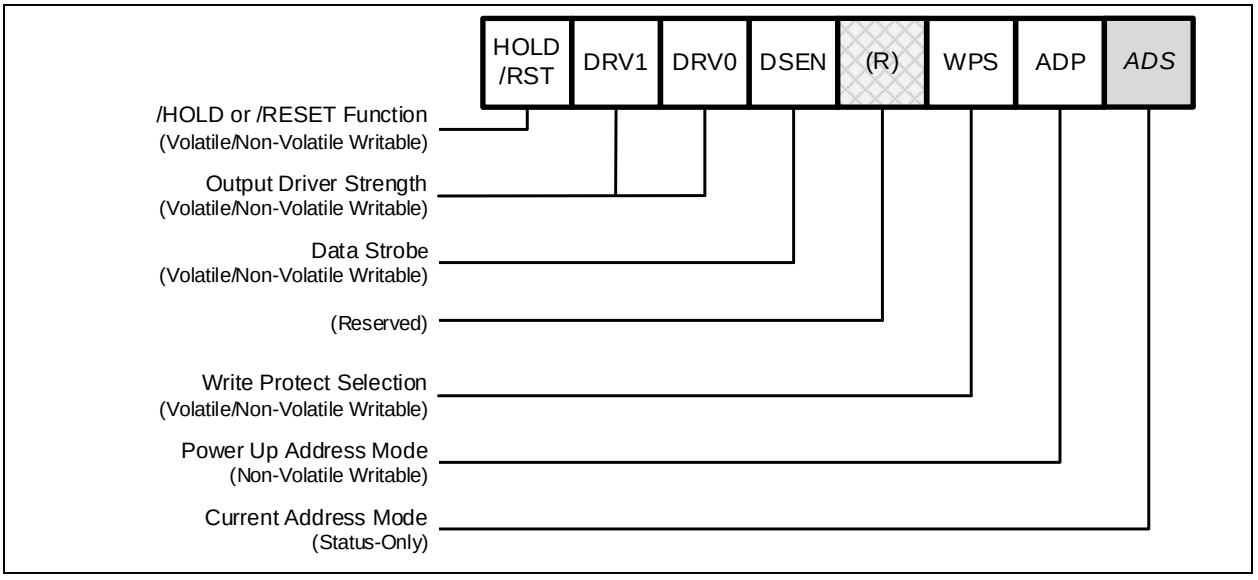

Figure 5.3.12. Status Register-3

5.3.12 Current Address Mode (ADS) – *Status Only*

The Current Address Mode bit is a read only bit in the Status Register-3 that indicates which address mode the device is currently operating in. When ADS=0, the device is in the 3-Byte Address Mode. When ADS=1, the device is in the 4-Byte Address Mode.

5.3.13 Power-Up Address Mode (ADP) – Non-Volatile Writable

The ADP bit is a non-volatile bit that determines the initial address mode when the device is powered on or reset. This bit is only used during the power on or device reset initialization period, and it is only writable by the non-volatile Write Status sequence (06h + 11h). When ADP=0 (factory default). The device will power up into 3-Byte Address Mode. The Extended Address Register must be used to access memory regions beyond 128Mb. When ADP=1, the device will power up into 4-Byte Address Mode directly.

5.3.14 Write Protect Selection (WPS) – Volatile/Non-Volatile Writable

The WPS bit is used to select which Write Protect scheme should be used. When WPS=0, the device uses the combination of CMP, TB, BP [3:0] bits and Block Lock bits to protect a specific area of the memory array. When WPS=1, the device utilizes the Individual Block Locks to protect any individual sector or blocks. The CMP, TB and BP setting is ignored.

Upon power-up, software reset and hardware reset, If the WPS bit in status register 3 value is set to 0, all Flex Block/Sector Lock bits are initialized to 0; if the WPS bit in status register 3 value is set to 1, all Flex Block/Sector Lock bits are initialized to 1. Thereby protecting the entire memory array from Erase/Program operations. To unlock a specific sector or block, the “Flex Block/Sector Unlock (39h)” instruction must be issued.

Issuing the Write Status Register 3 instruction to change the WPS bit value will not change the Flex Block/Sector Lock bit setting.

5.3.15 Data Strobe Function (DSEN)- *Volatile/Non-Volatile Writable*

On W25QxxRV, the Data Strobe (DS) bit is used during read operations and is not used during program, erase, or write operations. These bits are non-volatile read/write bits in the status register. DSEN = 0 (Disable); DSEN = 1 (Enable).

5.3.16 Output Driver Strength (DRV1, DRV0) – *Volatile/Non-Volatile Writable*

The DRV1 & DRV0 bits are used to determine the output driver strength for the Read operations.

DRV1, DRV0	Resistance	Default value of Part Number and Suffix
0, 0	25-ohm	W25Q02RV-Q/M
0, 1	33-ohm	W25Q01RV-Q/M W25Q33/64/12/25/51RV-N
1, 0	50-ohm	W25Q33/64/12/25/51RV-Q/M
1, 1	100-ohm	

5.3.17 /HOLD or /RESET Pin Function (HOLD/RST) – *Volatile/Non-Volatile Writable*

The HOLD/RST bit is used to determine whether the /HOLD or /RESET function should be implemented on the hardware pin. When HOLD/RST=0 (factory default), the pin acts as /HOLD; when HOLD/RST=1, the pin acts as /RESET. However, the /HOLD or /RESET functions are only available when QE=0. If QE is set to 1, the /HOLD and /RESET functions are disabled, the pin acts as a dedicated data I/O pin.

5.3.18 Reserved Bits – *Non-Functional*

There are a few reserved Status Register bits that may be read out as a “0” or “1”. It is recommended to ignore the values of these bits. During a “Write Status Register” instruction, the Reserved Bits can be written as “0”, but there will not be any effect.

5.4 Status Register Memory Protection (WPS = 0)

5.4.1 W25Q33RV Status Register Memory Protection (WPS = 0, CMP = 0)

STATUS REGISTER[1]					W25Q33RV (32M-BIT/ 4M-BYTE) MEMORY PROTECTION[3]			
SEC	TB	BP2	BP1	BP0	PROTECTED BLOCK(S)	PROTECTED ADDRESSES	PROTECTED DENSITY	PROTECTED PORTION[2]
X	X	0	0	0	NONE	NONE	NONE	NONE
0	0	0	0	1	63	3F0000h – 3FFFFFh	64KB	Upper 1/64
0	0	0	1	0	62 and 63	3E0000h – 3FFFFFh	128KB	Upper 1/32
0	0	0	1	1	60 thru 63	3C0000h – 3FFFFFh	256KB	Upper 1/16
0	0	1	0	0	56 thru 63	380000h – 3FFFFFh	512KB	Upper 1/8
0	0	1	0	1	48 thru 63	300000h – 3FFFFFh	1MB	Upper 1/4
0	0	1	1	0	32 thru 63	200000h – 3FFFFFh	2MB	Upper 1/2
0	1	0	0	1	0	000000h – 00FFFFh	64KB	Lower 1/64
0	1	0	1	0	0 and 1	000000h – 01FFFFh	128KB	Lower 1/32
0	1	0	1	1	0 thru 3	000000h – 03FFFFh	256KB	Lower 1/16
0	1	1	0	0	0 thru 7	000000h – 07FFFFh	512KB	Lower 1/8
0	1	1	0	1	0 thru 15	000000h – 0FFFFFh	1MB	Lower 1/4
0	1	1	1	0	0 thru 31	000000h – 1FFFFFh	2MB	Lower 1/2
X	X	1	1	1	0 thru 63	000000h – 3FFFFFh	4MB	ALL
1	0	0	0	1	63	3FF000h – 3FFFFFh	4KB	U - 1/1024
1	0	0	1	0	63	3FE000h – 3FFFFFh	8KB	U - 1/512
1	0	0	1	1	63	3FC000h – 3FFFFFh	16KB	U - 1/256
1	0	1	0	X	63	3F8000h – 3FFFFFh	32KB	U - 1/128
1	0	1	1	0	63	3F8000h – 3FFFFFh	32KB	U - 1/128
1	1	0	0	1	0	000000h – 000FFFh	4KB	L - 1/1024
1	1	0	1	0	0	000000h – 001FFFh	8KB	L - 1/512
1	1	0	1	1	0	000000h – 003FFFh	16KB	L - 1/256
1	1	1	0	X	0	000000h – 007FFFh	32KB	L - 1/128
1	1	1	1	0	0	000000h – 007FFFh	32KB	L - 1/128

Notes:

1. X = don't care
2. L = Lower; U = Upper.
3. If any Erase or Program command specifies a memory region that contains a protected data portion, this command will be ignored.

5.4.2 W25Q33RV Status Register Memory Protection (WPS = 0, CMP = 1)

STATUS REGISTER[1]					W25Q33RV (32M-BIT/ 4M-BYTE) MEMORY PROTECTION[3]			
SEC	TB	BP2	BP1	BP0	PROTECTED BLOCK(S)	PROTECTED ADDRESSES	PROTECTED DENSITY	PROTECTED PORTION[2]
X	X	0	0	0	NONE	NONE	NONE	NONE
0	0	0	0	1	63	3F0000h – 3FFFFFh	64KB	Upper 1/64
0	0	0	1	0	62 and 63	3E0000h – 3FFFFFh	128KB	Upper 1/32
0	0	0	1	1	60 thru 63	3C0000h – 3FFFFFh	256KB	Upper 1/16
0	0	1	0	0	56 thru 63	380000h – 3FFFFFh	512KB	Upper 1/8
0	0	1	0	1	48 thru 63	300000h – 3FFFFFh	1MB	Upper 1/4
0	0	1	1	0	32 thru 63	200000h – 3FFFFFh	2MB	Upper 1/2
0	1	0	0	1	0	000000h – 00FFFFh	64KB	Lower 1/64
0	1	0	1	0	0 and 1	000000h – 01FFFFh	128KB	Lower 1/32
0	1	0	1	1	0 thru 3	000000h – 03FFFFh	256KB	Lower 1/16
0	1	1	0	0	0 thru 7	000000h – 07FFFFh	512KB	Lower 1/8
0	1	1	0	1	0 thru 15	000000h – 0FFFFFh	1MB	Lower 1/4
0	1	1	1	0	0 thru 31	000000h – 1FFFFFh	2MB	Lower 1/2
X	X	1	1	1	0 thru 63	000000h – 3FFFFFh	4MB	ALL
1	0	0	0	1	63	3FF000h – 3FFFFFh	4KB	U - 1/1024
1	0	0	1	0	63	3FE000h – 3FFFFFh	8KB	U - 1/512
1	0	0	1	1	63	3FC000h – 3FFFFFh	16KB	U - 1/256
1	0	1	0	X	63	3F8000h – 3FFFFFh	32KB	U - 1/128
1	0	1	1	0	63	3F8000h – 3FFFFFh	32KB	U - 1/128
1	1	0	0	1	0	000000h – 000FFFh	4KB	L - 1/1024
1	1	0	1	0	0	000000h – 001FFFh	8KB	L - 1/512
1	1	0	1	1	0	000000h – 003FFFh	16KB	L - 1/256
1	1	1	0	X	0	000000h – 007FFFh	32KB	L - 1/128
1	1	1	1	0	0	000000h – 007FFFh	32KB	L - 1/128

Notes:
1. X = don't care
2. L = Lower; U = Upper.
3. If any Erase or Program command specifies a memory region that contains a protected data portion, this command will be ignored.

5.4.3 W25Q64RV Status Register Memory Protection (WPS = 0, CMP = 0)

Status Register[1]					W25Q64RV (64M-bit/ 8M-Byte) Memory Protection[3]			
SEC	TB	BP2	BP1	BP0	PROTECTED BLOCK(S)	PROTECTED ADDRESSES	PROTECTED DENSITY	PROTECTED PORTION[2]
X	X	0	0	0	NONE	NONE	NONE	NONE
0	0	0	0	1	126 and 127	7E0000h – 7FFFFFh	128KB	Upper 1/64
0	0	0	1	0	124 thru 127	7C0000h – 7FFFFFh	256KB	Upper 1/32
0	0	0	1	1	120 thru 127	780000h – 7FFFFFh	512KB	Upper 1/16
0	0	1	0	0	112 thru 127	700000h – 7FFFFFh	1MB	Upper 1/8
0	0	1	0	1	96 thru 127	600000h – 7FFFFFh	2MB	Upper 1/4
0	0	1	1	0	64 thru 127	400000h – 7FFFFFh	4MB	Upper 1/2
0	1	0	0	1	0 and 1	000000h – 01FFFFh	128KB	Lower 1/64
0	1	0	1	0	0 thru 3	000000h – 03FFFFh	256KB	Lower 1/32
0	1	0	1	1	0 thru 7	000000h – 07FFFFh	512KB	Lower 1/16
0	1	1	0	0	0 thru 15	000000h – 0FFFFFh	1MB	Lower 1/8
0	1	1	0	1	0 thru 31	000000h – 1FFFFFh	2MB	Lower 1/4
0	1	1	1	0	0 thru 63	000000h – 3FFFFFh	4MB	Lower 1/2
X	X	1	1	1	0 thru 127	000000h – 7FFFFFh	8MB	ALL
1	0	0	0	1	127	7FF000h – 7FFFFFh	4KB	U – 1/2048
1	0	0	1	0	127	7FE000h – 7FFFFFh	8KB	U – 1/1024
1	0	0	1	1	127	7FC000h – 7FFFFFh	16KB	U – 1/512
1	0	1	0	X	127	7F8000h – 7FFFFFh	32KB	U – 1/256
1	1	0	0	1	0	000000h – 000FFFh	4KB	L – 1/2048
1	1	0	1	0	0	000000h – 001FFFh	8KB	L – 1/1024
1	1	0	1	1	0	000000h – 003FFFh	16KB	L – 1/512
1	1	1	0	X	0	000000h – 007FFFh	32KB	L – 1/256

Notes:
1. X = don't care
2. L = Lower; U = Upper.
3. If any Erase or Program command specifies a memory region that contains a protected data portion, this command will be ignored.

5.4.4 W25Q64RV Status Register Memory Protection (WPS = 0, CMP = 1)

Status Register[1]					W25Q64RV (64M-bit/ 8M-Byte) Memory Protection[3]			
SEC	TB	SEC	TB	SEC	PROTECTED BLOCK(S)	PROTECTED ADDRESSES	PROTECTED DENSITY	PROTECTED PORTION[2]
X	X	0	0	0	0 thru 127	000000h – 7FFFFFh	8MB	ALL
0	0	0	0	1	0 thru 125	000000h – 7DFFFFh	8,064KB	Lower 63/64
0	0	0	1	0	0 thru 123	000000h – 7BFFFFh	7,936KB	Lower 31/32
0	0	0	1	1	0 thru 119	000000h – 77FFFFh	7,680KB	Lower 15/16
0	0	1	0	0	0 thru 111	000000h – 6FFFFFh	7MB	Lower 7/8
0	0	1	0	1	0 thru 95	000000h – 5FFFFFh	5MB	Lower 3/4
0	0	1	1	0	0 thru 63	000000h – 3FFFFFh	4MB	Lower 1/2
0	1	0	0	1	2 thru 127	020000h – 7FFFFFh	8,064KB	Upper 63/64
0	1	0	1	0	4 thru 127	040000h – 7FFFFFh	7,936KB	Upper 31/32
0	1	0	1	1	8 thru 127	080000h – 7FFFFFh	7,680KB	Upper 15/16
0	1	1	0	0	16 thru 127	100000h – 7FFFFFh	7MB	Upper 7/8
0	1	1	0	1	32 thru 127	200000h – 7FFFFFh	5MB	Upper 3/4
0	1	1	1	0	64 thru 127	400000h – 7FFFFFh	4MB	Upper 1/2
X	X	1	1	1	NONE	NONE	NONE	NONE
1	0	0	0	1	0 thru 127	000000h – 7FEFFFh	8,188KB	L – 2047/2048
1	0	0	1	0	0 thru 127	000000h – 7FDFFFh	8,184KB	L – 1023/1024
1	0	0	1	1	0 thru 127	000000h – 7FBFFFh	8,176KB	L – 511/512
1	0	1	0	X	0 thru 127	000000h – 7F7FFFh	8,160KB	L – 255/256
1	1	0	0	1	0 thru 127	001000h – 7FFFFFh	8,188KB	L – 2047/2048
1	1	0	1	0	0 thru 127	002000h – 7FFFFFh	8,184KB	L – 1023/1024
1	1	0	1	1	0 thru 127	004000h – 7FFFFFh	8,176KB	L – 511/512
1	1	1	0	X	0 thru 127	008000h – 7FFFFFh	8,160KB	L – 255/256

Notes:
1. X = don't care
2. L = Lower; U = Upper
3. If any Erase or Program command specifies a memory region that contains a protected data portion, this command will be ignored.

5.4.5 W25Q12RV Status Register Memory Protection (WPS = 0, CMP = 0)

STATUS REGISTER[1]					W25Q12RV (128M-BIT/ 16M-BYTE) MEMORY PROTECTION[3]			
SEC	TB	BP2	BP1	BP0	PROTECTED BLOCK(S)	PROTECTED ADDRESSES	PROTECTED DENSITY	PROTECTED PORTION[2]
X	X	0	0	0	NONE	NONE	NONE	NONE
0	0	0	0	1	252 thru 255	FC0000h – FFFFFFh	256KB	Upper 1/64
0	0	0	1	0	248 thru 255	F80000h – FFFFFFh	512KB	Upper 1/32
0	0	0	1	1	240 thru 255	F00000h – FFFFFFh	1MB	Upper 1/16
0	0	1	0	0	224 thru 255	E00000h – FFFFFFh	2MB	Upper 1/8
0	0	1	0	1	192 thru 255	C00000h – FFFFFFh	4MB	Upper 1/4
0	0	1	1	0	128 thru 255	800000h – FFFFFFh	8MB	Upper 1/2
0	1	0	0	1	0 thru 3	000000h – 03FFFFh	256KB	Lower 1/64
0	1	0	1	0	0 thru 7	000000h – 07FFFFh	512KB	Lower 1/32
0	1	0	1	1	0 thru 15	000000h – 0FFFFFh	1MB	Lower 1/16
0	1	1	0	0	0 thru 31	000000h – 1FFFFFh	2MB	Lower 1/8
0	1	1	0	1	0 thru 63	000000h – 3FFFFFh	4MB	Lower 1/4
0	1	1	1	0	0 thru 127	000000h – 7FFFFFh	8MB	Lower 1/2
X	X	1	1	1	0 thru 255	000000h – FFFFFFh	16MB	ALL
1	0	0	0	1	255	FFF000h – FFFFFFh	4KB	U - 1/4096
1	0	0	1	0	255	FFE000h – FFFFFFh	8KB	U - 1/2048
1	0	0	1	1	255	FFC000h – FFFFFFh	16KB	U - 1/1024
1	0	1	0	X	255	FF8000h – FFFFFFh	32KB	U - 1/512
1	1	0	0	1	0	000000h – 000FFFh	4KB	L - 1/4096
1	1	0	1	0	0	000000h – 001FFFh	8KB	L - 1/2048
1	1	0	1	1	0	000000h – 003FFFh	16KB	L - 1/1024
1	1	1	0	X	0	000000h – 007FFFh	32KB	L - 1/512

Notes:
1. X = don't care
2. L = Lower; U = Upper.
3. If any Erase or Program command specifies a memory region that contains a protected data portion, this command will be ignored.

5.4.6 W25Q12RV Status Register Memory Protection (WPS = 0, CMP = 1)

STATUS REGISTER[1]					W25Q12RV (128M-BIT/ 16M-BYTE) MEMORY PROTECTION[3]			
SEC	TB	BP2	BP1	BP0	PROTECTED BLOCK(S)	PROTECTED ADDRESSES	PROTECTED DENSITY	PROTECTED PORTION[2]
X	X	0	0	0	0 thru 255	000000h - FFFFFFh	16MB	ALL
0	0	0	0	1	0 thru 251	000000h - FBFFFFh	16,128KB	Lower 63/64
0	0	0	1	0	0 thru 247	000000h – F7FFFFh	15,872KB	Lower 31/32
0	0	0	1	1	0 thru 239	000000h - EFFFFFh	15MB	Lower 15/16
0	0	1	0	0	0 thru 223	000000h - DFFFFFh	14MB	Lower 7/8
0	0	1	0	1	0 thru 191	000000h - BFFFFFh	12MB	Lower 3/4
0	0	1	1	0	0 thru 127	000000h - 7FFFFFh	8MB	Lower 1/2
0	1	0	0	1	4 thru 255	040000h - FFFFFFh	16,128KB	Upper 63/64
0	1	0	1	0	8 thru 255	080000h - FFFFFFh	15,872KB	Upper 31/32
0	1	0	1	1	16 thru 255	100000h - FFFFFFh	15MB	Upper 15/16
0	1	1	0	0	32 thru 255	200000h - FFFFFFh	14MB	Upper 7/8
0	1	1	0	1	64 thru 255	400000h - FFFFFFh	12MB	Upper 3/4
0	1	1	1	0	128 thru 255	800000h - FFFFFFh	8MB	Upper 1/2
X	X	1	1	1	NONE	NONE	NONE	NONE
1	0	0	0	1	0 thru 255	000000h – FFEFFFh	16,380KB	L - 4095/4096
1	0	0	1	0	0 thru 255	000000h – FFDFFFh	16,376KB	L - 2047/2048
1	0	0	1	1	0 thru 255	000000h – FFBFFFh	16,368KB	L - 1023/1024
1	0	1	0	X	0 thru 255	000000h – FF7FFFh	16,352KB	L - 511/512
1	1	0	0	1	0 thru 255	001000h – FFFFFFh	16,380KB	U - 4095/4096
1	1	0	1	0	0 thru 255	002000h – FFFFFFh	16,376KB	U - 2047/2048
1	1	0	1	1	0 thru 255	004000h – FFFFFFh	16,368KB	U -1023/1024
1	1	1	0	X	0 thru 255	008000h – FFFFFFh	16,352KB	U - 511/512

Notes:
1. X = don't care
2. L = Lower; U = Upper.
3. If any Erase or Program command specifies a memory region that contains a protected data portion, this command will be ignored.

5.4.7 W25Q25RV Status Register Memory Protection (WPS = 0, CMP = 0)

STATUS REGISTER[1]					W25Q25RV (256M-BIT / 32M-BYTE) MEMORY PROTECTION[2]			
TB	BP3	BP2	BP1	BP0	PROTECTED BLOCK(S)	PROTECTED ADDRESSES	PROTECTED DENSITY	PROTECTED PORTION
X	0	0	0	0	NONE	NONE	NONE	NONE
0	0	0	0	1	511	01FF0000h - 01FFFFFFh	64KB	Upper 1/512
0	0	0	1	0	510 thru 511	01FE0000h - 01FFFFFFh	128KB	Upper 1/256
0	0	0	1	1	508 thru 511	01FC0000h - 01FFFFFFh	256KB	Upper 1/128
0	0	1	0	0	504 thru 511	01F80000h - 01FFFFFFh	512KB	Upper 1/64
0	0	1	0	1	496 thru 511	01F00000h - 01FFFFFFh	1MB	Upper 1/32
0	0	1	1	0	480 thru 511	01E00000h - 01FFFFFFh	2MB	Upper 1/16
0	0	1	1	1	448 thru 511	01C00000h - 01FFFFFFh	4MB	Upper 1/8
0	1	0	0	0	384 thru 511	01800000h - 01FFFFFFh	8MB	Upper 1/4
0	1	0	0	1	256 thru 511	01000000h - 01FFFFFFh	16MB	Upper 1/2
1	0	0	0	1	0	00000000h - 0000FFFFh	64KB	Lower 1/512
1	0	0	1	0	0 thru 1	00000000h - 0001FFFFh	128KB	Lower 1/256
1	0	0	1	1	0 thru 3	00000000h - 0003FFFFh	256KB	Lower 1/128
1	0	1	0	0	0 thru 7	00000000h - 0007FFFFh	512KB	Lower 1/64
1	0	1	0	1	0 thru 15	00000000h - 000FFFFFh	1MB	Lower 1/32
1	0	1	1	0	0 thru 31	00000000h - 001FFFFFh	2MB	Lower 1/16
1	0	1	1	1	0 thru 63	00000000h - 003FFFFFh	4MB	Lower 1/8
1	1	0	0	0	0 thru 127	00000000h - 007FFFFFh	8MB	Lower 1/4
1	1	0	0	1	0 thru 255	00000000h - 00FFFFFFh	16MB	Lower 1/2
X	1	1	0	X	0 thru 511	00000000h - 01FFFFFFh	32MB	ALL
X	1	X	1	X	0 thru 511	00000000h - 01FFFFFFh	32MB	ALL

Notes:
1. X = don't care
2. If any Erase or Program command specifies a memory region that contains a protected data portion, this command will be ignored.

5.4.8 W25Q25RV Status Register Memory Protection (WPS = 0, CMP = 1)

STATUS REGISTER[1]					W25Q25RV (256M-BIT / 32M-BYTE) MEMORY PROTECTION[2]			
TB	BP3	BP2	BP1	BP0	PROTECTED BLOCK(S)	PROTECTED ADDRESSES	PROTECTED DENSITY	PROTECTED PORTION
X	0	0	0	0	ALL	00000000h - 01FFFFFFh	ALL	ALL
0	0	0	0	1	0 thru 510	00000000h - 01FEFFFFh	32,704KB	Lower 511/512
0	0	0	1	0	0 thru 509	00000000h - 01FDFFFFh	32,640KB	Lower 255/256
0	0	0	1	1	0 thru 507	00000000h - 01FBFFFFh	32,512KB	Lower 127/128
0	0	1	0	0	0 thru 503	00000000h - 01F7FFFFh	32,256KB	Lower 63/64
0	0	1	0	1	0 thru 495	00000000h - 01EFFFFFh	31MB	Lower 31/32
0	0	1	1	0	0 thru 479	00000000h - 01DFFFFFh	30MB	Lower 15/16
0	0	1	1	1	0 thru 447	00000000h - 01BFFFFFh	28MB	Lower 7/8
0	1	0	0	0	0 thru 383	00000000h - 017FFFFFh	24MB	Lower 3/4
0	1	0	0	1	0 thru 255	00000000h - 00FFFFFFh	16MB	Lower 1/2
1	0	0	0	1	1 thru 511	00010000h - 01FFFFFFh	32,704KB	Upper 511/512
1	0	0	1	0	2 thru 511	00020000h - 01FFFFFFh	32,640KB	Upper 255/256
1	0	0	1	1	4 thru 511	00040000h - 01FFFFFFh	32,512KB	Upper 127/128
1	0	1	0	0	8 thru 511	00080000h - 01FFFFFFh	32,256KB	Upper 63/64
1	0	1	0	1	16 thru 511	00100000h - 01FFFFFFh	31MB	Upper 31/32
1	0	1	1	0	32 thru 511	00200000h - 01FFFFFFh	30MB	Upper 15/16
1	0	1	1	1	64 thru 511	00400000h - 01FFFFFFh	28MB	Upper 7/8
1	1	0	0	0	128 thru 511	00800000h - 01FFFFFFh	24MB	Upper 3/4
1	1	0	0	1	256 thru 511	01000000h - 01FFFFFFh	16MB	Upper 1/2
X	1	1	0	X	NONE	NONE	NONE	NONE
X	1	X	1	X	NONE	NONE	NONE	NONE

Notes:
1. X = don't care
2. If any Erase or Program command specifies a memory region that contains a protected data portion, this command will be ignored.

5.4.9 W25Q51RV Status Register Memory Protection (WPS = 0, CMP = 0)

STATUS REGISTER(1)					W25Q51RV (512M-BIT / 64M-BYTE) MEMORY PROTECTION2)			
TB	BP3	BP2	BP1	BP0	PROTECTED BLOCK(S)	PROTECTED ADDRESSES	PROTECTED DENSITY	PROTECTED PORTION
0	0	0	0	0	NONE	NONE	NONE	NONE
0	0	0	0	1	1023	03FF0000h - 03FFFFFFh	64KB	Upper 1/1024
0	0	0	1	0	1022 thru 1023	03FE0000h - 03FFFFFFh	128KB	Upper 1/512
0	0	0	1	1	1020 thru 1023	03FC0000h - 03FFFFFFh	256KB	Upper 1/256
0	0	1	0	0	1016 thru 1023	03F80000h - 03FFFFFFh	512KB	Upper 1/128
0	0	1	0	1	1008 thru 1023	03F00000h - 03FFFFFFh	1MB	Upper 1/64
0	0	1	1	0	992 thru 1023	03E00000h - 03FFFFFFh	2MB	Upper 1/32
0	0	1	1	1	960 thru 1023	03C00000h - 03FFFFFFh	4MB	Upper 1/16
0	1	0	0	0	896 thru 1023	03800000h - 03FFFFFFh	8MB	Upper 1/8
0	1	0	0	1	768 thru 1023	03000000h - 03FFFFFFh	16MB	Upper 1/4
0	1	0	1	0	512 thru 1023	02000000h - 03FFFFFFh	32MB	Upper 1/2
0	1	0	1	1	0 thru 1023	00000000h - 03FFFFFFh	64MB	ALL
0	1	1	0	0	0 thru 1023	00000000h - 03FFFFFFh	64MB	ALL
0	1	1	0	1	0 thru 1023	00000000h - 03FFFFFFh	64MB	ALL
0	1	1	1	0	0 thru 1023	00000000h - 03FFFFFFh	64MB	ALL
0	1	1	1	1	0 thru 1023	00000000h - 03FFFFFFh	64MB	ALL
1	0	0	0	0	NONE	NONE	NONE	NONE
1	0	0	0	1	0	00000000h - 0000FFFFh	64KB	Lower 1/1024
1	0	0	1	0	0 thru 1	00000000h - 0001FFFFh	128KB	Lower 1/512
1	0	0	1	1	0 thru 3	00000000h - 0003FFFFh	256KB	Lower 1/256
1	0	1	0	0	0 thru 7	00000000h - 0007FFFFh	512KB	Lower 1/128
1	0	1	0	1	0 thru 15	00000000h - 000FFFFFh	1MB	Lower 1/64
1	0	1	1	0	0 thru 31	00000000h - 001FFFFFh	2MB	Lower 1/32
1	0	1	1	1	0 thru 63	00000000h - 003FFFFFh	4MB	Lower 1/16
1	1	0	0	0	0 thru 127	00000000h - 007FFFFFh	8MB	Lower 1/8
1	1	0	0	1	0 thru 255	00000000h - 00FFFFFFh	16MB	Lower 1/4
1	1	0	1	0	0 thru 511	00000000h - 01FFFFFFh	32MB	Lower 1/2
1	1	0	1	1	0 thru 1023	00000000h - 03FFFFFFh	64MB	ALL
1	1	1	X	X	0 thru 1023	00000000h - 03FFFFFFh	64MB	ALL

Notes:

1. X = don't care
2. If any Erase or Program command specifies a memory region that contains a protected data portion, this command will be ignored.

5.4.10 W25Q51RV Status Register Memory Protection (WPS = 0, CMP = 1)

STATUS REGISTER[1]					W25Q51RV (512M-BIT / 64M-BYTE) MEMORY PROTECTION[2]			
TB	BP3	BP2	BP1	BP0	PROTECTED BLOCK(S)	PROTECTED ADDRESSES	PROTECTED DENSITY	PROTECTED PORTION
0	0	0	0	0	ALL	00000000h - 03FFFFFFh	ALL	ALL
0	0	0	0	1	0 thru 1022	00000000h - 03FEFFFFh	65,472KB	Lower 1023/1024
0	0	0	1	0	0 thru 1021	00000000h - 03FDFFFFh	65,408KB	Lower 511/512
0	0	0	1	1	0 thru 1019	00000000h - 03FBFFFFh	65,280KB	Lower 255/256
0	0	1	0	0	0 thru 1015	00000000h - 03F7FFFFh	65,024KB	Lower 127/128
0	0	1	0	1	0 thru 1007	00000000h - 03EFFFFFh	63MB	Lower 63/64
0	0	1	1	0	0 thru 991	00000000h - 03DFFFFFh	62MB	Lower 31/32
0	0	1	1	1	0 thru 959	00000000h - 03BFFFFFh	60MB	Lower 15/16
0	1	0	0	0	0 thru 895	00000000h - 037FFFFFh	56MB	Lower 7/8
0	1	0	0	1	0 thru 767	00000000h - 02FFFFFFh	48MB	Lower 3/4
0	1	0	1	0	0 thru 511	00000000h - 01FFFFFFh	32MB	Lower 1/2
0	1	0	1	1	NONE	NONE	NONE	NONE
0	1	1	0	0	NONE	NONE	NONE	NONE
0	1	1	0	1	NONE	NONE	NONE	NONE
0	1	1	1	0	NONE	NONE	NONE	NONE
0	1	1	1	1	NONE	NONE	NONE	NONE
1	0	0	0	0	ALL	00000000h - 03FFFFFFh	ALL	ALL
1	0	0	0	1	1 thru 1023	00010000h - 03FFFFFFh	65,472KB	Upper 1023/1024
1	0	0	1	0	2 thru 1023	00020000h - 03FFFFFFh	65,408KB	Upper 511/512
1	0	0	1	1	4 thru 1023	00040000h - 03FFFFFFh	65,280KB	Upper 255/256
1	0	1	0	0	8 thru 1023	00080000h - 03FFFFFFh	65,024KB	Upper 127/128
1	0	1	0	1	16 thru 1023	00100000h - 03FFFFFFh	63MB	Upper 63/64
1	0	1	1	0	32 thru 1023	00200000h - 03FFFFFFh	62MB	Upper 31/32
1	0	1	1	1	64 thru 1023	00400000h - 03FFFFFFh	60MB	Upper 15/16
1	1	0	0	0	128 thru 1023	00800000h - 03FFFFFFh	56MB	Upper 7/8
1	1	0	0	1	256 thru 1023	01000000h - 03FFFFFFh	48MB	Upper 3/4
1	1	0	1	0	512 thru 1023	02000000h - 03FFFFFFh	32MB	Upper 1/2
1	1	0	1	1	NONE	NONE	NONE	NONE
1	1	1	X	X	NONE	NONE	NONE	NONE

Notes:

1. X = don't care
2. If any Erase or Program command specifies a memory region that contains a protected data portion, this command will be ignored.

5.4.11 W25Q01RV Status Register Memory Protection (WPS = 0, CMP = 0)

STATUS REGISTER[1]					W25Q01RV (1G-BIT / 128M-BYTE) MEMORY PROTECTION[2]			
TB	BP3	BP2	BP1	BP0	PROTECTED BLOCK(S)	PROTECTED ADDRESSES	PROTECTED DENSITY	PROTECTED PORTION
0	0	0	0	0	NONE	NONE	NONE	NONE
0	0	0	0	1	2047	07FF0000h - 07FFFFFFh	64KB	Upper 1/2048
0	0	0	1	0	2046 thru 2047	07FE0000h - 07FFFFFFh	128KB	Upper 1/1024
0	0	0	1	1	2044 thru 2047	07FC0000h - 07FFFFFFh	256KB	Upper 1/512
0	0	1	0	0	2040 thru 2047	07F80000h - 07FFFFFFh	512KB	Upper 1/256
0	0	1	0	1	2032 thru 2047	07F00000h - 07FFFFFFh	1MB	Upper 1/128
0	0	1	1	0	2016 thru 2047	07E00000h - 07FFFFFFh	2MB	Upper 1/64
0	0	1	1	1	1984 thru 2047	07C00000h - 07FFFFFFh	4MB	Upper 1/32
0	1	0	0	0	1920 thru 2047	07800000h - 07FFFFFFh	8MB	Upper 1/16
0	1	0	0	1	1792 thru 2047	07000000h - 07FFFFFFh	16MB	Upper 1/8
0	1	0	1	0	1536 thru 2047	06000000h - 07FFFFFFh	32MB	Upper 1/4
0	1	0	1	1	1024 thru 2047	04000000h - 07FFFFFFh	64MB	Upper 1/2
0	1	1	0	0	0 thru 2047	00000000h - 07FFFFFFh	128MB	ALL
0	1	1	0	1	0 thru 2047	00000000h - 07FFFFFFh	128MB	ALL
0	1	1	1	0	0 thru 2047	00000000h - 07FFFFFFh	128MB	ALL
0	1	1	1	1	0 thru 2047	00000000h - 07FFFFFFh	128MB	ALL
1	0	0	0	0	NONE	NONE	NONE	NONE
1	0	0	0	1	0	00000000h - 0000FFFFh	64KB	Lower 1/2048
1	0	0	1	0	0 thru 1	00000000h - 0001FFFFh	128KB	Lower 1/1024
1	0	0	1	1	0 thru 3	00000000h - 0003FFFFh	256KB	Lower 1/512
1	0	1	0	0	0 thru 7	00000000h - 0007FFFFh	512KB	Lower 1/256
1	0	1	0	1	0 thru 15	00000000h - 000FFFFFh	1MB	Lower 1/128
1	0	1	1	0	0 thru 31	00000000h - 001FFFFFh	2MB	Lower 1/64
1	0	1	1	1	0 thru 63	00000000h - 003FFFFFh	4MB	Lower 1/32
1	1	0	0	0	0 thru 127	00000000h - 007FFFFFh	8MB	Lower 1/16
1	1	0	0	1	0 thru 255	00000000h - 00FFFFFFh	16MB	Lower 1/8
1	1	0	1	0	0 thru 511	00000000h - 01FFFFFFh	32MB	Lower 1/4
1	1	0	1	1	0 thru 1023	00000000h - 03FFFFFFh	64MB	Lower 1/2
1	1	1	X	X	0 thru 2047	00000000h - 07FFFFFFh	128MB	ALL

Notes:

1. X = don't care
2. If any Erase or Program command specifies a memory region that contains a protected data portion, this command will be ignored.

5.4.12 W25Q01RV Status Register Memory Protection (WPS = 0, CMP = 1)

STATUS REGISTER[1]					W25Q01RV (1G-BIT / 128M-BYTE) MEMORY PROTECTION[2]			
TB	BP3	BP2	BP1	BP0	PROTECTED BLOCK(S)	PROTECTED ADDRESSES	PROTECTED DENSITY	PROTECTED PORTION
0	0	0	0	0	ALL	00000000h - 07FFFFFFh	ALL	ALL
0	0	0	0	1	0 thru 2046	00000000h - 07FEFFFFh	131,008KB	Lower 2047/2048
0	0	0	1	0	0 thru 2045	00000000h - 07FDFFFFh	130,944KB	Lower 1023/1024
0	0	0	1	1	0 thru 2043	00000000h - 07FBFFFFh	130,816KB	Lower 511/512
0	0	1	0	0	0 thru 2039	00000000h - 07F7FFFFh	130,560KB	Lower 255/256
0	0	1	0	1	0 thru 2031	00000000h - 07EFFFFFh	127MB	Lower 127/128
0	0	1	1	0	0 thru 2015	00000000h - 07DFFFFFh	126MB	Lower 63/64
0	0	1	1	1	0 thru 1983	00000000h - 07BFFFFFh	124MB	Lower 31/32
0	1	0	0	0	0 thru 1919	00000000h - 077FFFFFh	120MB	Lower 15/16
0	1	0	0	1	0 thru 1791	00000000h - 06FFFFFFh	112MB	Lower 7/8
0	1	0	1	0	0 thru 1535	00000000h - 05FFFFFFh	96MB	Lower 3/4
0	1	0	1	1	0 thru 1023	00000000h - 03FFFFFFh	64MB	Lower 1/2
0	1	1	0	0	NONE	NONE	NONE	NONE
0	1	1	0	1	NONE	NONE	NONE	NONE
0	1	1	1	0	NONE	NONE	NONE	NONE
0	1	1	1	1	NONE	NONE	NONE	NONE
1	0	0	0	0	ALL	00000000h - 07FFFFFFh	ALL	ALL
1	0	0	0	1	1 thru 2047	00010000h - 07FFFFFFh	131,008KB	Upper 2047/2048
1	0	0	1	0	2 thru 2047	00020000h - 07FFFFFFh	130,944KB	Upper 1023/1024
1	0	0	1	1	4 thru 2047	00040000h - 07FFFFFFh	130,816KB	Upper 511/512
1	0	1	0	0	8 thru 2047	00080000h - 07FFFFFFh	130,560KB	Upper 255/256
1	0	1	0	1	16 thru 2047	00100000h - 07FFFFFFh	127MB	Upper 127/128
1	0	1	1	0	32 thru 2047	00200000h - 07FFFFFFh	126MB	Upper 63/64
1	0	1	1	1	64 thru 2047	00400000h - 07FFFFFFh	124MB	Upper 31/32
1	1	0	0	0	128 thru 2047	00800000h - 07FFFFFFh	120MB	Upper 15/16
1	1	0	0	1	256 thru 2047	01000000h - 07FFFFFFh	112MB	Upper 7/8
1	1	0	1	0	512 thru 2047	02000000h - 07FFFFFFh	96MB	Upper 3/4
1	1	0	1	1	1024 thru 2047	04000000h - 07FFFFFFh	64MB	Upper 1/2
1	1	1	X	X	NONE	NONE	NONE	NONE

Notes:

1. X = don't care
2. If any Erase or Program command specifies a memory region that contains a protected data portion, this command will be ignored.

5.4.13 W25Q02RV Status Register Memory Protection (WPS = 0, CMP = 0)

STATUS REGISTER[1]					W25Q02RV (2G-BIT / 256M-BYTE) MEMORY PROTECTION[2]			
TB	BP3	BP2	BP1	BP0	PROTECTED BLOCK(S)	PROTECTED ADDRESSES	PROTECTED DENSITY	PROTECTED PORTION
0	0	0	0	0	NONE	NONE	NONE	NONE
0	0	0	0	1	4095	0FFF0000h – 0FFFFFFFh	64KB	Upper 1/4096
0	0	0	1	0	4094 thru 4095	0FFE0000h – 0FFFFFFFh	128KB	Upper 1/2048
0	0	0	1	1	4092 thru 4095	0FFC0000h – 0FFFFFFFh	256KB	Upper 1/1024
0	0	1	0	0	4088 thru 4095	0FF80000h – 0FFFFFFFh	512KB	Upper 1/512
0	0	1	0	1	4080 thru 4095	0FF00000h – 0FFFFFFFh	1MB	Upper 1/256
0	0	1	1	0	4064 thru 4095	0FE00000h – 0FFFFFFFh	2MB	Upper 1/128
0	0	1	1	1	4032 thru 4095	0FC00000h – 0FFFFFFFh	4MB	Upper 1/64
0	1	0	0	0	3968 thru 4095	0F800000h – 0FFFFFFFh	8MB	Upper 1/32
0	1	0	0	1	3840 thru 4095	0F000000h – 0FFFFFFFh	16MB	Upper 1/16
0	1	0	1	0	3584 thru 4095	0E000000h – 0FFFFFFFh	32MB	Upper 1/8
0	1	0	1	1	3072 thru 4095	0C000000h – 0FFFFFFFh	64MB	Upper 1/4
0	1	1	0	0	2048 thru 4095	08000000h – 0FFFFFFFh	128MB	Upper 1/2
0	1	1	0	1	ALL	00000000h – 0FFFFFFFh	ALL	ALL
0	1	1	1	0	ALL	00000000h – 0FFFFFFFh	ALL	ALL
0	1	1	1	1	ALL	00000000h – 0FFFFFFFh	ALL	ALL
1	0	0	0	0	NONE	NONE	NONE	NONE
1	0	0	0	1	0	00000000h - 0000FFFFh	64KB	Lower 1/4096
1	0	0	1	0	0 thru 1	00000000h - 0001FFFFh	128KB	Lower 1/2048
1	0	0	1	1	0 thru 3	00000000h - 0003FFFFh	256KB	Lower 1/1024
1	0	1	0	0	0 thru 7	00000000h - 0007FFFFh	512KB	Lower 1/512
1	0	1	0	1	0 thru 15	00000000h – 000FFFFFh	1MB	Lower 1/256
1	0	1	1	0	0 thru 31	00000000h – 001FFFFFh	2MB	Lower 1/128
1	0	1	1	1	0 thru 63	00000000h – 003FFFFFh	4MB	Lower 1/64
1	1	0	0	0	0 thru 127	00000000h – 007FFFFFh	8MB	Lower 1/32
1	1	0	0	1	0 thru 255	00000000h – 00FFFFFFh	16MB	Lower 1/16
1	1	0	1	0	0 thru 511	00000000h – 01FFFFFFh	32MB	Lower 1/8
1	1	0	1	1	0 thru 1023	00000000h – 03FFFFFFh	64MB	Lower 1/4
1	1	1	0	0	0 thru 2047	00000000h – 07FFFFFFh	128MB	Lower 1/2
1	1	1	0	1	ALL	00000000h – 0FFFFFFFh	ALL	ALL
1	1	1	1	X	ALL	00000000h – 0FFFFFFFh	ALL	ALL

Notes:

1. X = don't care
2. If any Erase or Program command specifies a memory region that contains a protected data portion, this command will be ignored.

5.4.14 W25Q02RV Status Register Memory Protection (WPS = 0, CMP = 1)

STATUS REGISTER					W25Q02RV (2G-BIT / 256M-BYTE) MEMORY PROTECTION[1]			
TB	BP3	BP2	BP1	BP0	PROTECTED BLOCK(S)	PROTECTED ADDRESSES	PROTECTED DENSITY	PROTECTED PORTION
0	0	0	0	0	ALL	00000000h – 0FFFFFFFh	ALL	ALL
0	0	0	0	1	0 thru 4094	00000000h – 0FFEFFFFh	262,080KB	Lower 4095/4096
0	0	0	1	0	0 thru 4093	00000000h – 0FFDFFFFh	262,016KB	Lower 2047/2048
0	0	0	1	1	0 thru 4091	00000000h – 0FFBFFFFh	261,888KB	Lower 1023/1024
0	0	1	0	0	0 thru 4087	00000000h – 0FF7FFFFh	261.632KB	Lower 511/512
0	0	1	0	1	0 thru 4079	00000000h – 0FEFFFFFh	255MB	Lower 255/256
0	0	1	1	0	0 thru 4063	00000000h – 0FDFFFFFh	254MB	Lower 127/128
0	0	1	1	1	0 thru 4031	00000000h – 0FBFFFFFh	252MB	Lower 63/64
0	1	0	0	0	0 thru 3967	00000000h – 0F7FFFFFh	248MB	Lower 31/32
0	1	0	0	1	0 thru 3839	00000000h – 0EFFFFFFh	240MB	Lower 15/16
0	1	0	1	0	0 thru 3583	00000000h – 0DFFFFFFh	224MB	Lower 7/8
0	1	0	1	1	0 thru 3071	00000000h – 0BFFFFFFh	192MB	Lower 3/4
0	1	1	0	0	0 thru 2047	00000000h – 07FFFFFFh	128MB	Lower 1/2
0	1	1	0	1	NONE	NONE	NONE	NONE
0	1	1	1	0	NONE	NONE	NONE	NONE
0	1	1	1	1	NONE	NONE	NONE	NONE
1	0	0	0	0	ALL	00000000h – 0FFFFFFFh	ALL	ALL
1	0	0	0	1	1 thru 4095	00010000h – 0FFFFFFFh	262,080KB	Upper 4095/4096
1	0	0	1	0	2 thru 4095	00020000h – 0FFFFFFFh	262,016KB	Upper 2047/2048
1	0	0	1	1	4 thru 4095	00040000h – 0FFFFFFFh	261,888KB	Upper 1023/1024
1	0	1	0	0	8 thru 4095	00080000h – 0FFFFFFFh	261.632KB	Upper 511/512
1	0	1	0	1	16 thru 4095	00100000h – 0FFFFFFFh	255MB	Upper 255/256
1	0	1	1	0	32 thru 4095	00200000h – 0FFFFFFFh	254MB	Upper 127/128
1	0	1	1	1	64 thru 4095	00400000h – 0FFFFFFFh	252MB	Upper 63/64
1	1	0	0	0	128 thru 4095	00800000h – 0FFFFFFFh	248MB	Upper 31/32
1	1	0	0	1	256 thru 4095	01000000h – 0FFFFFFFh	240MB	Upper 15/16
1	1	0	1	0	512 thru 4095	02000000h – 0FFFFFFFh	224MB	Upper 7/8
1	1	0	1	1	1024 thru 4095	04000000h – 0FFFFFFFh	192MB	Upper 3/4
1	1	1	0	0	2048 thru 4095	08000000h – 0FFFFFFFh	128MB	Upper 1/2
1	1	1	0	1	NONE	NONE	NONE	NONE
1	1	1	1	X	NONE	NONE	NONE	NONE

Notes:

1. X = don't care
2. If any Erase or Program command specifies a memory region that contains a protected data portion, this command will be ignored.

5.5 Flex Block Memory Protection (WPS=1)

5.5.1 W25Q33RV,64RV,12RV Flex Block Memory Protection (WPS=1)

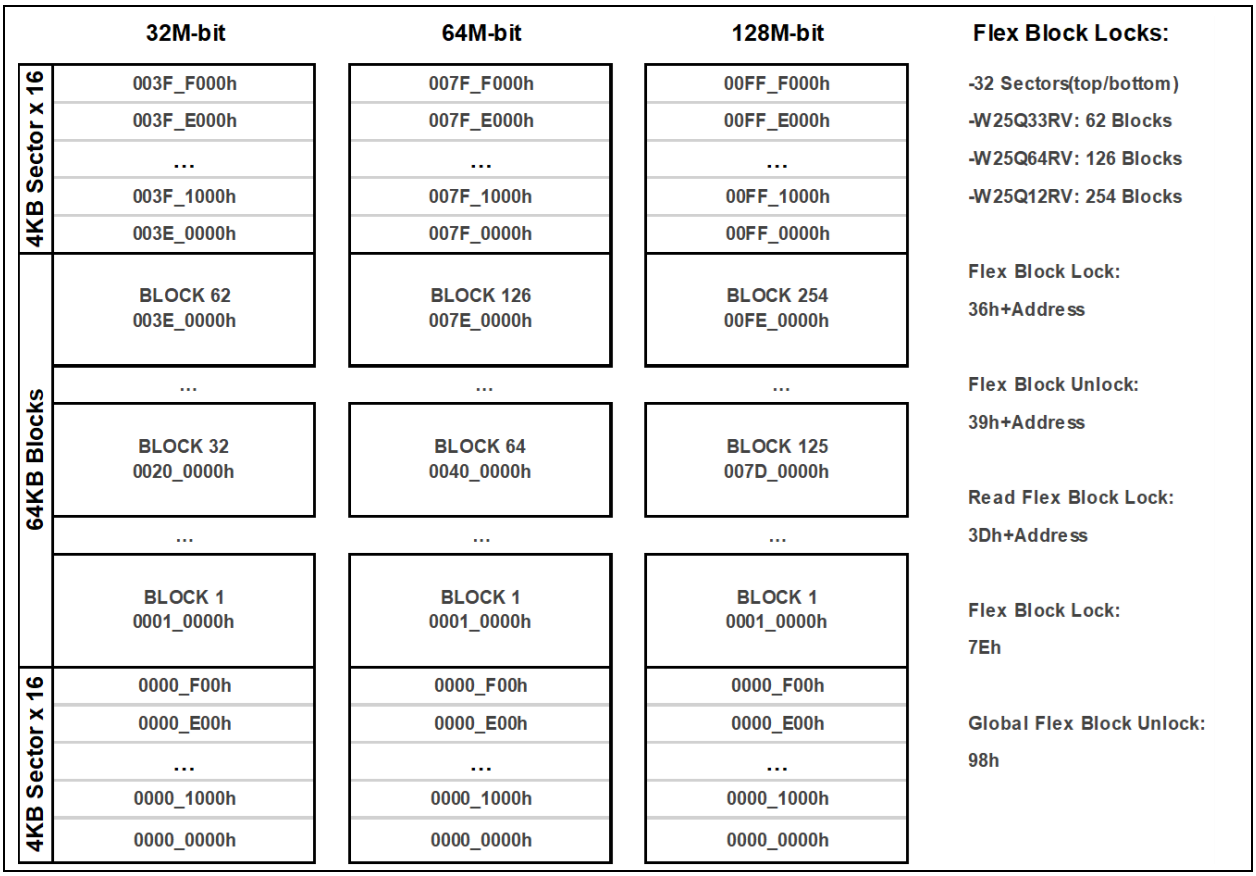

Figure 5.6.1. W25Q33RV,64RV,12RV Flex Block/Sector Locks

Notes:

1. Flex Block/Sector protection is only valid when WPS=1.
2. All Flex Block/Sector lock bits are set to 1 by default after power up, all memory array is protected.
3. When WPS = 1, the CMP, TB, and BP[3:0] settings are effective.

5.5.2 W25Q25RV,51RV Flex Block Memory Protection (WPS=1)

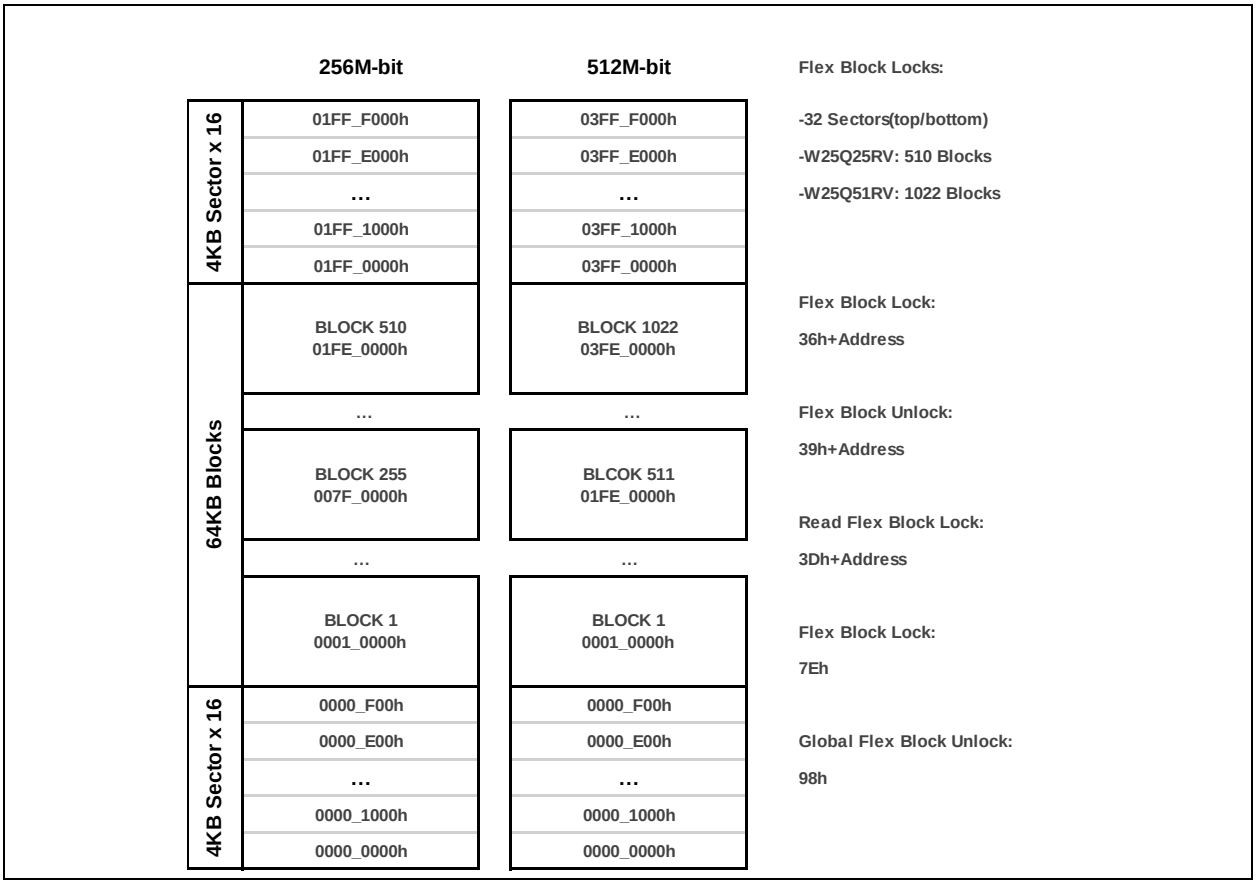

Figure 5.5.2. W25Q25RV, 51RV Flex Block/Sector Locks

Notes:

1. Flex Block/Sector protection is only valid when WPS=1.
2. All Flex Block/Sector lock bits are set to 1 by default after power up, all memory array is protected.
3. When WPS = 1, the CMP, TB, and BP[3:0] settings are effective.

5.5.3 W25Q01RV Flex Block Memory Protection (WPS=1)

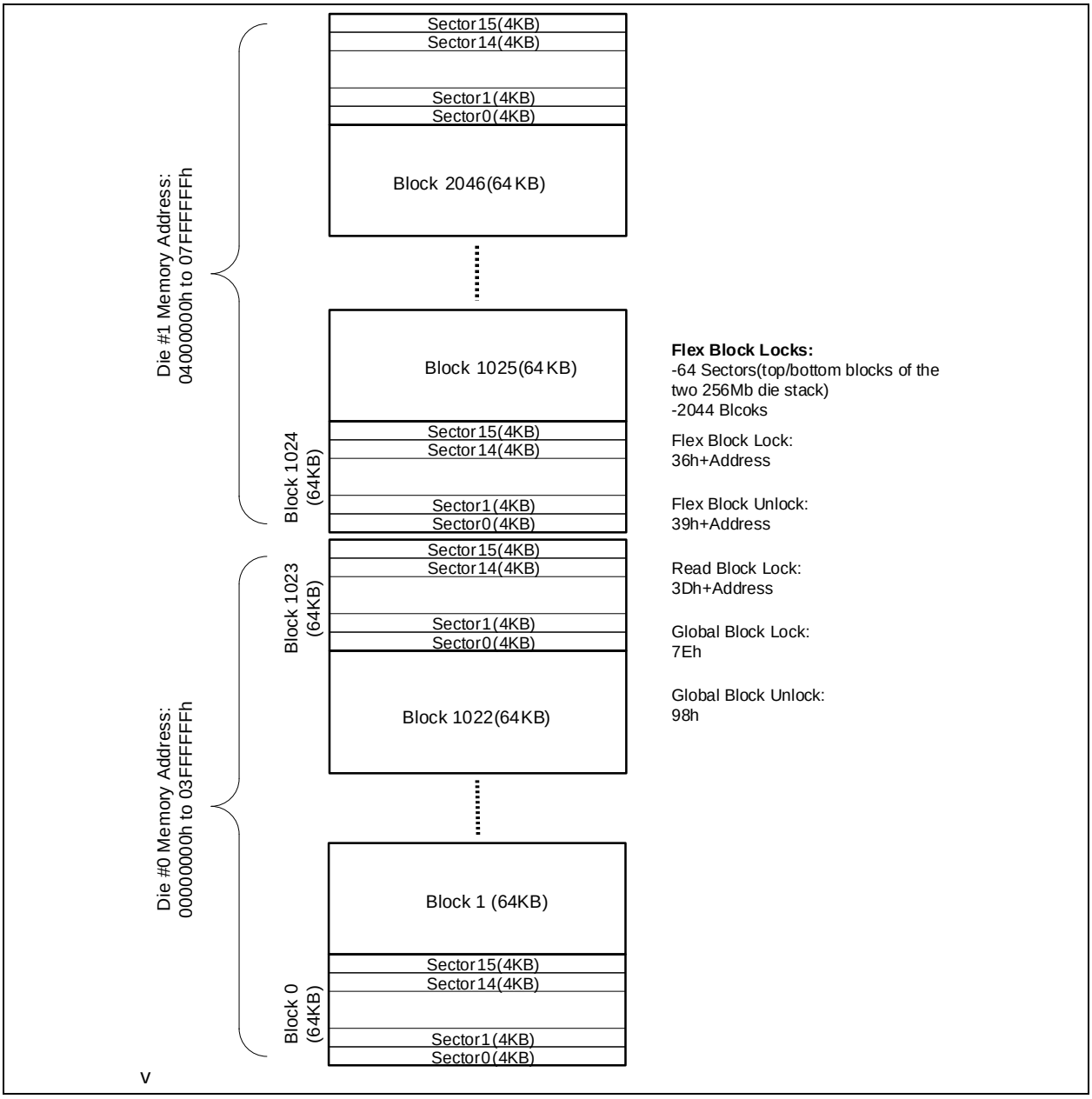

Figure 5.5.3.W25Q01RV Flex Block/Sector Locks

Notes:

1. Flex Block/Sector protection is only valid when WPS=1.
2. All Flex Block/Sector lock bits are set to 1 by default after power up, all memory array is protected.
3. When WPS = 1, the CMP, TB, and BP[3:0] settings are effective.

5.5.4 W25Q02RV Flex Block Memory Protection (WPS=1)

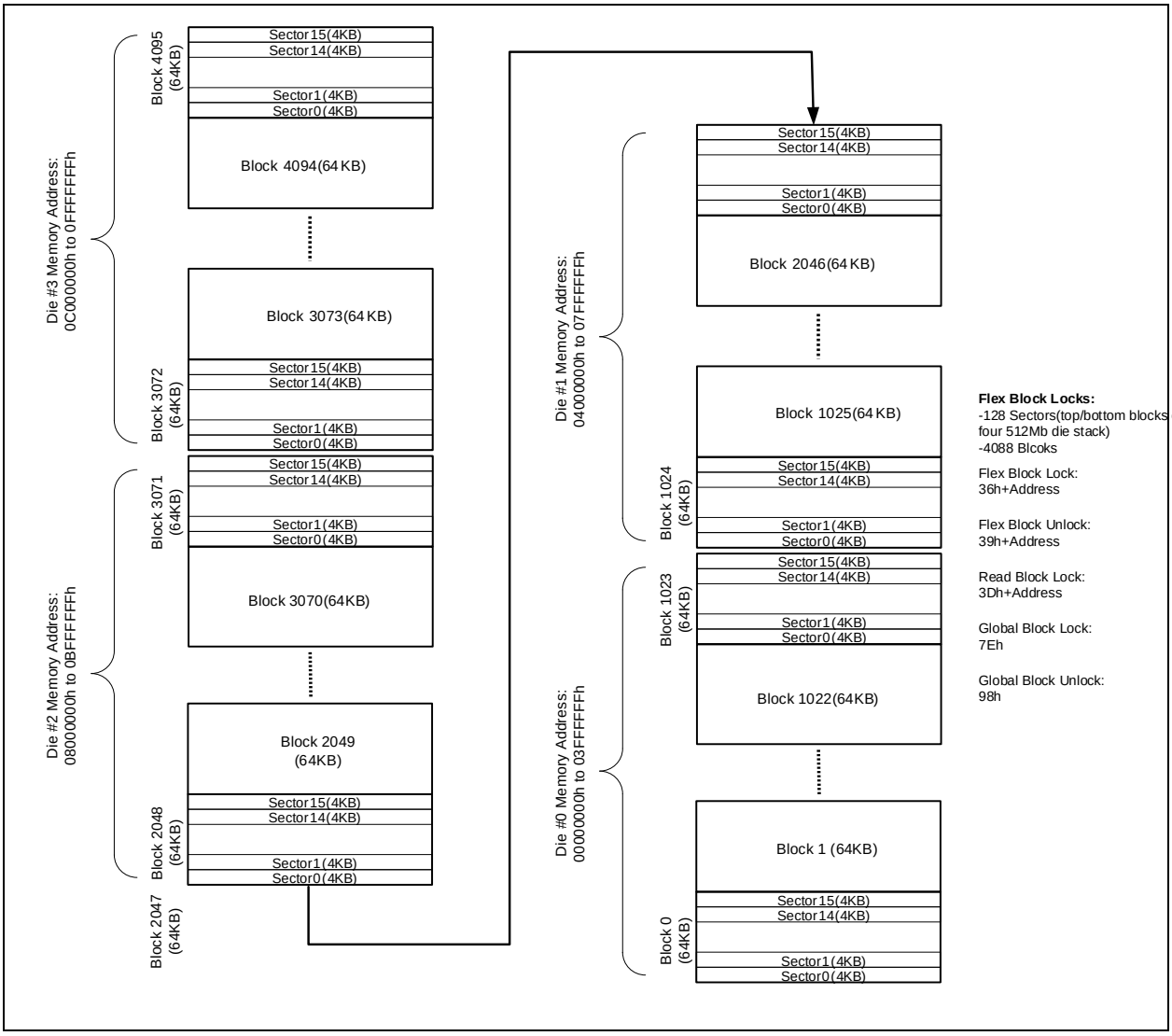

Figure 5.5.4.W25Q02RV. Flex Block/Sector Locks

Notes:

1. Flex Block/Sector protection is only valid when WPS=1.
2. All Flex Block/Sector lock bits are set to 1 by default after power up, all memory array is protected.
3. When WPS = 1, the CMP, TB, and BP[3:0] settings are effective.

5.6 Extended Address Register – Volatile Writable Only

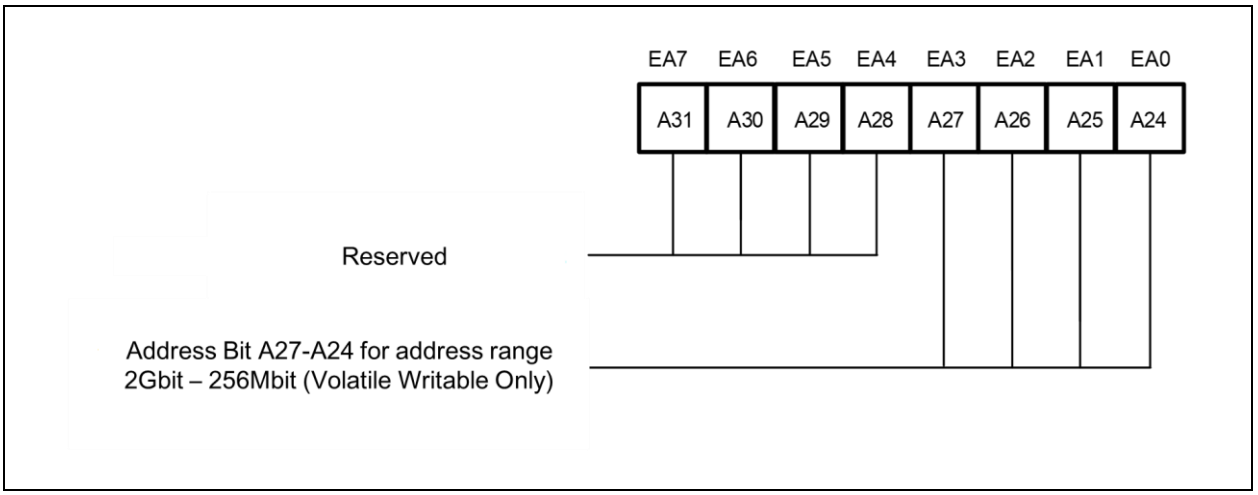

Figure 5.6. Extended Address Register

In addition to the Status Registers, the W25QxxRV provide a volatile Extended Address Register which consists of the 4th byte of memory address. The Extended Address Register is accessible by the Read Extended Address Register (C8h) and Write Extended Address Register (C5h) instructions. The Extended Address Register is used only when the device is operating in the 3-Byte Address Mode (ADS=0). The separate 128Mb memory array ranges are accessible depending on the setting of the Extended Address Register A27, A26, A25 and A24 bits as shown on the table below.

Memory Array range

0FFFFFFFh 0F000000h	<A27-A24> = 1111	07FFFFFFh 07000000h	<A27-A24> = 0111
0EFFFFFFh 0E000000h	<A27-A24> = 1110	06FFFFFFh 06000000h	<A27-A24> = 0110
0DFFFFFFh 0D000000h	<A27-A24> = 1101	05FFFFFFh 05000000h	<A27-A24> = 0101
0CFFFFFFh 0C000000h	<A27-A24> = 1100	04FFFFFFh 04000000h	<A27-A24> = 0100
0BFFFFFFh 0B000000h	<A27-A24> = 1011	03FFFFFFh 03000000h	<A27-A24> = 0011
0AFFFFFFh 0A000000h	<A27-A24> = 1010	02FFFFFFh 02000000h	<A27-A24> = 0010
09FFFFFFh 09000000h	<A27-A24> = 1001	01FFFFFFh 01000000h	<A27-A24> = 0001
08FFFFFFh 08000000h	<A27-A24> = 1000	00FFFFFFh 00000000h	<A27-A24> = 0000

Any command with a dedicated 4-byte address input will use the 4th Address Byte (A31-A24) input and not the Extended Address Register. If the device powers up with ADP bit set to 1, or an “Enter 4-Byte Address Mode (B7h)” instruction is issued, the device will require 4-Byte address input for all address related instructions, and the Extended Address Register setting will be ignored. The 4th Byte Address input will not alter the content of Extended Address Register.

Upon power up, hardware reset, or after the execution of a Software Reset, the Extended Address Register values will be cleared to 0.

5.7 Page Buffer

In Standard SPI mode, one of the new powerful features of the W25QxxRV is the integrated Serial SRAM buffer and its associated Program Buffer. Together, the 256-byte Serial SRAM provides usable SRAM storage. The SRAM can be used in conjunction with the Flash memory or independently. The main purpose of the Serial SRAM is to serve as the primary buffer for data to be written into the Serial Flash memory array. In case of need, it can help to transform random Byte Write to page Program Buffer.

Using the Write Buffer instruction, data is first shifted into the SRAM from the SPI bus. When the instruction sequence has been completed, the entire 256-bytes is transferred to the Program Buffer. The Program Buffer supports the array during the Erase/Write cycle (tWP), freeing the SRAM to accept new data. This double-buffering scheme increases erase/write transfer rates and can eliminate the need for external RAM buffers (Figure 5.7). The SRAM is fully byte addressable. Thus, the entire 256-bytes, a single byte, or a sequence of bytes can be read from or written to the SRAM. This allows the SRAM to be used as a temporary work area for read-modify-write operations prior to a sector write.

The Transfer Sector to SRAM instruction allows the contents of a specified sector of Flash memory to be moved to the SRAM. This can be useful when only a portion of a sector needs to be altered. In this case the sector is first transferred to the SRAM, where modifications are made using the Write to SRAM instruction. Once complete, a Transfer SRAM to Sector instruction is used to update the sector.

Page Buffer control instruction as below:

- Clear Buffer(81h): Reset all the bit in the Page Buffer becomes ‘1’.
- Write Buffer(82h): Write the data into the Page Buffer, from the 1st byte to the 256th byte.
- Read Buffer(83h): Read out the data from Page Buffer.
- Program Buffer(8Ah): Write the Page Buffer data into the specified Flash Physical memory page.
- Load Buffer(8Bh): Read the data from the specified Flash Physical memory page into the Page Buffer.

Upon power off or the execution of a reset, all bits in the Page Buffer become ‘1’, effectively clearing the buffer. After Release Power-down (ABh), a clear buffer command must be issued.”

For details, please refer to the application note on “AN0000078 Winbond SPI NOR Flash Page Buffer Operation”

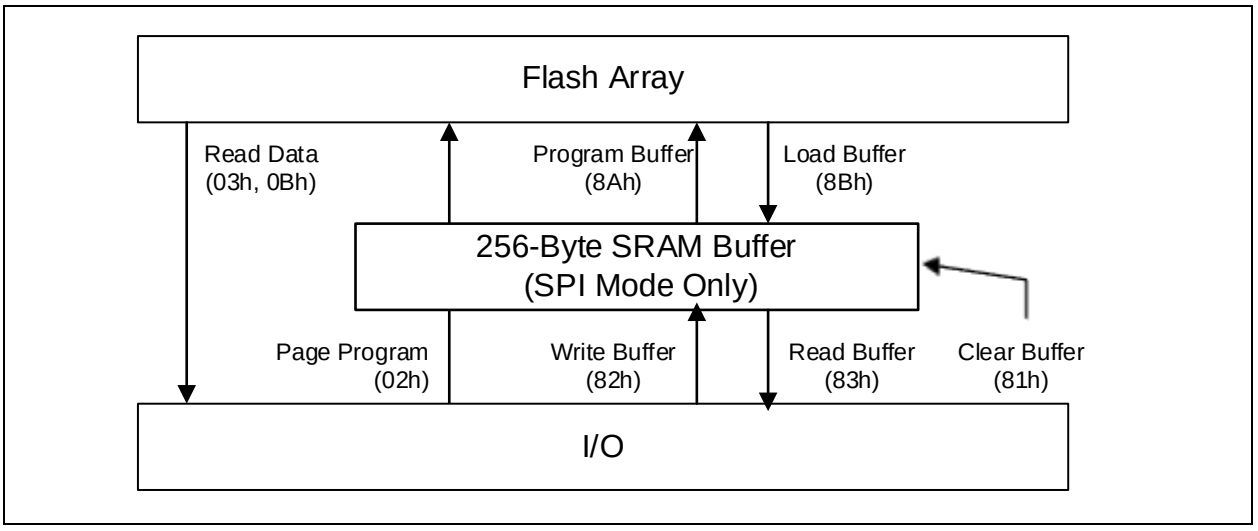

Figure 5.7. Serial Flash Buffer Mode

6 INSTRUCTIONS

The Standard/Dual/Quad SPI instruction set of the W25QxxRV consists basic instructions that are fully controlled through the SPI bus. Instructions are initiated with the falling edge of Chip Select (/CS). The first byte of data clocked into the DI input provides the instruction code. Data on the DI input is sampled on the rising edge of clock with the most significant bit (MSB) first.

The QPI instruction set of the W25QxxRV consists basic instructions that are fully controlled through the SPI bus. Instructions are initiated with the falling edge of Chip Select (/CS). The first byte of data clocked through IO[3:0] pins provide the instruction code. Data on all four IO pins are sampled on the rising edge of clock with the most significant bit (MSB) first. All QPI instructions, addresses, data and dummy bytes use all four IO pins to transfer every byte of data with every two serial clocks (CLK).

For SPI/QPI DTR Read instructions, the address input is sampled on both the rising and falling edges of the clock; the data output is also ready on both edges of the clock

Instruction Set Number table:

Instruction Set	3 and 4-Byte Address Mode (ADS=0 & 1)	3-Byte or 4 Address Mode (ADS=0 or 4)	Part Number Suffix(2)
Standard/Dual/Quad	1, 2, 3	4, 5	-Q, -N, -M
QPI	6, 7	8-10	-Q, -N, -M
SPI DTR/QPI DTR(1)	12, 15	11, 13, 14	-M

Notes:

1. The SPI DTR and QPI DTR instructions are only supported with Part Number Suffix “M”
2. Please see the link to “”

Instructions vary in length from a single byte to several bytes and may be followed by address bytes, data bytes, dummy bytes (don’t care), and in some cases, a combination. Instructions are completed with the rising edge of edge /CS. Clock relative timing diagrams for each instruction are included in each chapter. All read instructions can be completed after any clocked bit. However, all instructions that Write, Program or Erase must complete on a byte boundary (/CS driven high after a full 8-bits have been clocked) otherwise the instruction will be ignored. This feature further protects the device from inadvertent writes. Additionally, while the memory is being programmed or erased, or when the Status Register is being written, all instructions except for Read Status Register will be ignored until the program or erase cycle has completed.

6.1 Device ID and Instruction Set Tables

Manufacturer and Device Identification

MANUFACTURER ID	**(MF7 - MF0)**		
Winbond Serial Flash	EFh		
Device ID	**(ID7 - ID0)**	**(ID15 - ID0)**	
Instruction	**ABh, 90h, 92h, 94h**	**9Fh**	
Part Number and Suffix		**-M**	**-Q, -N**
W25Q33RV	15h	7016h	4016h
W25Q64RV	16h	7017h	4017h
W25Q12RV	17h	7018h	4018h
W25Q25RV	18h	7019h	4019h
W25Q51RV	19h	7020h	4020h
W25Q01RV	20h	7021h	4021h
W25Q02RV	21h	7022h	4022h

6.2 W25Q33RV/64RV/12RV Command Table with Maximum Clock Frequencies (MHz)[1]

6.2.1 SPI Commands Operable in Both 3-Byte and 4-Byte Address Modes

Command-- *W25Q33RV/64RV/12RV*	**Opcode**	**Address Bytes**	**Dummy Cycles**	**Data Bytes**	**Aligned Address**	**Any Address**
Number of Clock (IO 1-1-1)	8	8-8-8	N dummy	8 - 8…	MHz	MHz
Write Enable	06h	--	--	--	166	166
Volatile Status Register Write Enable	50h	--	--	--	166	166
Write Disable	04h	--	--	--	166	166
Release Power-down / ID	ABh	--	24	ID7-ID0	166	166
Read Manufacturer/Device ID	90h	00h,00h,00h	--	(MF7-0) - (ID7-ID0)	166	166
Read JEDEC ID	9Fh	--	--	(MF7-0) - (ID15-8) - (ID7-0)	166	166
Set Read Parameters	C0h	--	--	P7-P0	166	166
Chip Erase	C7h/60h	--	--	--	166	166
Read Status Register-1	05h	--	--	(S7-S0)	166	166
Write Status Register-1	01h	--	--	S7-S0	166	166
Read Status Register-2	35h	--	--	(S15-S8)	166	166
Write Status Register-2	31h	--	--	S15-S8	166	166
Read Status Register-3	15h	--	--	(S23-S16)	166	166
Write Status Register-3	11h	--	--	S23-S16	166	166
Read SFDP Register	5Ah	A23-A0	8	(D7-D0)	133	104
Global Block Lock	7Eh	--	--	--	166	166
Global Block Unlock	98h	--	--	--	166	166
Erase / Program Suspend	75h	--	--	--	166	166
Erase / Program Resume	7Ah	--	--	--	166	166
Power-down	B9h	--	--	--	166	166
Enter 4-Byte Address Mode	B7h	--	--	--	166	166
Exit 4-Byte Address Mode	E9h	--	--	--	166	166
Enter QPI Mode	38h	--	--	--	166	166
Enable Reset	66h	--	--	--	166	166
Reset Device	99h	--	--	--	166	166
Set Burst with Wrap	77h		24		166	166
Recovery for Erase	A8h	--	--	--	166	166

6.2.2 SPI Commands Operable in Both 3-Byte and 4-Byte Address Modes

Command-*W25Q33RV/64RV/12RV*	**Opcode**	**Address Bytes**	**Read Bypass**	**Dummy Cycles**	**Data Bytes**	**Aligned Address**	**Any Address**
Number of Clock (IO 1-1-1)	8	8-8-8-8	M7-0	N dummy	8 - 8…	MHz	MHz
Read Data with 4-Byte Addr	13h	A31-A0	--	--	(D7-D0)	84	66
Fast Read with 4-Byte Addr	0Ch	A31-A0	--	8	(D7-D0)	133	104
Page Program with 4-Byte Addr	12h	A31-A0	--	--	(D7-D0)	166	166
4KB Sector Erase with 4-Byte Addr	21h	A31-A0	--	--	--	166	166
64KB Block Erase with 4-Byte Addr	DCh	A31-A0	--	--	--	166	166
Read Extended Address Register	C8h	--	--	--	(EA7-0)	166	166
Write Extended Address Register	C5h	--	--	--	EA7-0	166	166

Command-*W25Q33RV/64RV/12RV*	**Opcode**	**Address Bytes**	**Read Bypass**	**Dummy Cycles**	**Data Bytes**	**Aligned Address**	**Any Address**
Number of Clock (IO 1-1-1)	8	---	M7-0	N dummy	8 - 8…	MHz	MHz
Enter Factory Mode OP-1	51h	--	--	--	--	166	166
Enter Factory Mode OP-2	A5h	--	--	--	--	166	166
Enter Factory Mode OP-3	41h	--	--	--	--	166	166

6.2.3 SPI Commands Operable in Both 3-Byte and 4-Byte Address Modes

Command *W25Q33RV/64RV/12RV*		**Opcode**	**Address Bytes**	**Read Bypass**	**Dummy Cycles**	**Data Bytes**	**Aligned Address**	**Any Address**
Number of Clock (IO 1-1-2)		8	8-8-8-8	M7-0	N dummy	4 - … Clock	MHz	MHz
Fast Read Dual Output		3Ch	A31-A0	--	8	(D7-D0)…	133	104
Number of Clock (1-1-4)		8	8-8-8-8	M7-0	N dummy	2-…Clock	MHz	MHz
Quad Input Page Program		34h	A31-A0		--	D7-D0...	166	166
Fast Read Quad Output		6Ch	A31-A0	--	8	(D7-D0)	133	104
Number of Clock (1-2-2)		8	4-4-4-4	M7-0	N dummy	4-…Clock	MHz	MHz
Fast Read Dual I/O		BCh	A31-A0,	4	4	(D7-D0)	133	104
Number of Clock (1-4-4)		8	2-2-2-2	M7-0	N dummy	2-… Clock	MHz	MHz
Fast Read Quad I/O		ECh	A31-A0	2	4	(D7-D0)	133	104
Set Read Parameters (C0h) M7–0 serve as dummy bits	0 0 0		A31-A0	Disable	6 (Def)	(D7-0)…	133	104
	0 0 1		A31-A0	Disable	6	(D7-0)…	133	104
	0 1 0		A31-A0	Disable	6	(D7-0)…	133	104
	0 1 1		A31-A0	Disable	8	(D7-0)…	133	104
	1 0 0		A31-A0	Disable	10	(D7-0)…	133	104
	1 0 1		A31-A0	Disable	12	(D7-0)…	166	133
	1 1 0		A31-A0	Disable	14	(D7-0)…	166	133
	1 1 1		A31-A0	Disable	16	(D7-0)…	166	133

6.2.4 SPI Commands Dependent in 3‑Byte / 4‑Byte Address Mode (ADS=1: A31–A0, ADS=0: A23–A0)

Command *W25Q33RV/64RV/12RV*	**Opcode**	**Address Bytes**	**Read Bypass**	**Dummy Cycles**	**Data Bytes**	**Aligned Address**	**Any Address**
Number of Clock (IO 1-1-1)	8	8 / 8-8-8	M7-0	N dummy	8-… Clock	MHz	MHz
Read Unique ID	4Bh	--		40 / 32	(D7-D0)…	133	104
Read Data	03h	A31 / A23-A0		--	(D7-D0)..	84	66
Fast Read	0Bh	A31 / A23-A0		8	(D7-D0)…	133	104
Page Program	02h	A31 / A23-A0		--	D7-D0…	166	166
4KB Sector Erase	20h	A31 / A23-A0		--	--	166	166
32KB Block Erase	52h	A31 / A23-A0		--	--	166	166
64KB Block Erase	D8h	A31 / A23-A0		--	--	166	166
Erase Security Register(5)	44h	A31 / A23-A0		--	--	166	166
Program Security Register(5)	42h	A31 / A23-A0		--	D7-D0…	166	166
Read Security Register(5)	48h	A31 / A23-A0		8	(D7-D0)…	133	104
Read Flex Block Lock	3Dh	A31 / A23-A0		--	(L7-L0)…	133	104
Flex Block Lock	36h	A31 / A23-A0		--	--	166	166
Flex Block Unlock	39h	A31 / A23-A0		--	--	166	166

Command *W25Q33RV/64RV/12RV*	Opcode	Address Bytes	Read Bypass	Dummy Cycles	Data Bytes	Aligned Address	Any Address
Number of Clock (IO 1-1-1)	8	8 / 8-8-8	M7-0	N dummy/ Clock	8 - 8…	MHz	MHz
Clear Buffer	81h(14)	BA31 / BA23-BA0	--	--	--	166	166
Write Buffer	82h(14)	BA31 / BA23-BA0	--	--	(D7-D0)	166	166
Read Buffer	83h(14)	BA31 / BA23-BA0	--	8	(D7-D0)	166	166
Program Buffer	8Ah	A31 / A23-A0	--	--	--	166	166
Load Buffer	8Bh	A31 / A23-A0	--	--	--	166	166

6.2.5 SPI Commands Dependent in 3-Byte / 4-Byte Address Mode (ADS=1: A31–A0, ADS=0: A23–A0)

Command *W25Q33RV/64RV/12RV*	**Opcode**	**Address Bytes**	**Read Bypass**	**Dummy Cycles**	**Data Bytes**	**Aligned Address**	**Any Address**
Number of Clock (IO 1-1-1)	8	8 / 8-8-8	M7-M0	N dummy	8-8-8-8,…	MHz	MHz
Read checksum	9Ch	A31 / A23-A0	--	8	D(7-0,15-8,23-16,31-24),…	133	104
Command	Opcode	Address Bytes	Read Bypass	Dummy Cycles	Data Bytes	Aligned Address	Any Address
Number of Clock (IO 1-1-1)	8	8 / 8-8-8,8-8-8		N dummy	8-8-8-8	MHz	MHz
Calculate checksum	9Dh	SA31/SA23-0, EA31-EA0		--	--	166	166

Command *W25Q33RV/64RV/12RV*		**Opcode**	**Address Bytes**	**Read Bypass**	**Dummy Cycles**	**Data Bytes**	**Aligned Address**	**Any Address**
Number of Clock (IO 1-1-2)		8	8 / 8-8-8	M7-M0	N dummy	4-…	MHz	MHz
Fast Read Dual Output		3Bh	A31 / A23-A0	--	8	(D7-0)…	133	104
Number of Clock (IO 1-1-4)		8	8 / 8-8-8	M7-M0	N dummy	2-…	MHz	MHz
Quad Input Page Program		32h	A31 / A23-A0	--	--	D7-0…	166	166
Fast Read Quad Output		6Bh	A31 / A23-A0	--	8	(D7-0)…	133	104
Number of Clock (IO 1-2-2)			4 / 4-4-4	M7-M0	N dummy	4-…	MHz	MHz
Mftr./Device ID Dual I/O		92h	A31 / A23-8,00h	4-N/Allow	--	(MF7-0, ID7-ID0)	133	104
Fast Read Dual I/O		BBh	A31 / A23-A0	4	--	(D7-0)	133	104
Number of Clock (IO 1-4-4)			2 / 2-2-2-2-2	2	N dummy	2-… Clock	MHz	MHz
Mftr./Device ID Quad I/O		94h	A31 / A23-8,00h	2-N/Allow	4	(MF7-0, ID7-ID0)	133	104
Fast Read Quad I/O		EBh	A31 / A23-A0	2	4	(D7-0)…	133	104
Set Read Parameters (C0h) M7–0 serve as dummy bits	0 0 0		A31 / A23-A0	Disable	6(Def.)	(D7-0)…	133	104
	0 0 1		A31 / A23-A0	Disable	6	(D7-0)…	133	104
	0 1 0		A31 / A23-A0	Disable	6	(D7-0)…	133	104
	0 1 1		A31 / A23-A0	Disable	8	(D7-0)…	133	104
	1 0 0		A31 / A23-A0	Disable	10	(D7-0)…	133	104
	1 0 1		A31 / A23-A0	Disable	12	(D7-0)…	166	133
	1 1 0		A31 / A23-A0	Disable	14	(D7-0)…	166	133
	1 1 1		A31 / A23-A0	Disable	16	(D7-0)…	166	133

6.2.6 QPI Commands Operable in Both 3-Byte and 4-Byte Address Modes

Command *W25Q33RV/64RV/12RV*	**Opcode**	**Address Bytes**	**Read Bypass**	**Dummy Cycles**	**Data Bytes**	**Aligned Address**	**Any Address**
Number of Clock (IO 4-4-4)	2	2-2-2	M7-M0	N dummy	2-2…	MHz	MHz
Write Enable	06h	--	--	--	--	166	166
Volatile Status Register Write Enable	50h	--	--	--	--	166	166
Write Disable	04h	--	--	--	--	166	166
Release Power-down / ID	ABh	--	--	6	(ID7-ID0)	166	166
Read Manufacturer/Device ID	90h	--	--	4 Dummy + 00h	(MF7-0, ID7-ID0)	166	166
Read JEDEC ID	9Fh	--	--	--	(MF7-0) - (ID15-8) - (ID7-0)	166	166
Set Read Parameters	C0h	--	--	--	P7-P0	166	166
Chip Erase	C7h/60h	--	--	--	--	166	166
Read Status Register-1	05h	--	--	--	(S7-S0)	166	166
Write Status Register-1	01h	--	--	--	S7-S0	166	166
Read Status Register-2	35h	--	--	--	(S15-S8)	166	166
Write Status Register-2	31h	--	--	--	S15-S8	166	166
Read Status Register-3	15h	--	--	--	(S23-S16)	166	166
Write Status Register-3	11h	--	--	--	S23-S16	166	166
Read SFDP Register	5Ah	A23-16, A15-8, A7-0	--	2 Dummy	(D7-D0)	133	104
Global Block Lock	7Eh	--	--	--	--	166	166
Global Block Unlock	98h	--	--	--	--	166	166
Erase / Program Suspend	75h	--	--	--	--	166	166
Erase / Program Resume	7Ah	--	--	--	--	166	166
Power-down	B9h	--	--	--	--	166	166
Enter 4-Byte Address Mode	B7h	--	--	--	--	166	166
Exit 4-Byte Address Mode	E9h	--	--	--	--	166	166
Exit QPI Mode	FFh	--	--	--	--	166	166
Enable Reset	66h	--	--	--	--	166	166
Reset Device	99h	--	--	--	--	166	166
Recovery for Erase	A8h	--	--	--	--	166	166

6.2.7 QPI Commands Operable in Both 3-Byte and 4-Byte Address Modes

Command *W25Q33RV/64RV/12RV*	**Opcode**	**Address Bytes**	**Read Bypass**	**Dummy Cycles**	**Data Bytes**	**Aligned Address**	**Any Address**
Number of Clock(IO 4-4-4)	2	2-2-2-2	M7-0	N dummy	2-2…	MHz	MHz
Page Program with 4-Byte Addr	12h	A31-A0	--	--	(D7-D0)	166	166
4KB Sector Erase with 4-Byte Addr	21h	A31-A0	--	--	--	166	166
64KB Block Erase with 4-Byte Addr	DCh	A31-A0	--	--	--	166	166
Read Extended Address Register	C8h	--	--	--	(EA7-0)	166	166
Write Extended Address Register	C5h	--	--	--	EA7-0	166	166

Command *W25Q33RV/64RV/12RV*	**Opcode**	**Address Bytes**	**Read Bypass**	**Dummy Cycles**	**Data Bytes**	**Aligned Address**	**Any Address**
Number of Clock(IO 4-4-4)	2	---	M7-0	N dummy	8 - 8…	MHz	MHz
Enter Factory Mode OP-1	51h	--	--	--	--	166	166
Enter Factory Mode OP-2	A5h	--	--	--	--	166	166
Enter Factory Mode OP-3	41h	--	--	--	--	166	166

6.2.8 QPI Commands Dependent in 3-Byte / 4-Byte Address Mode (ADS=1: A31–A0 / ADS=0: A23–A0)

Command *W25Q33RV/64RV/12RV*	**Opcode**	**Address Bytes**	**Read Bypass**	**Dummy Cycles**	**Data Bytes**	**Aligned Address**	**Any Address**
Number of Clock(IO 4-4-4)	2	2 / 2-2-2	M7-M0	N dummy	2-2…	MHz	MHz
Page Program	02h	A31 / A23-A0	--	--	D7-0..	166	166
Sector Erase (4KB)	20h	A31 / A23-A0	--	--	--	166	166
Block Erase (32KB)	52h	A31 / A23-A0	--	--	--	166	166
Block Erase (64KB)	D8h	A31 / A23-A0	--	--		166	166
Read Flex Block Lock	3Dh	A31 / A23-A0	--	--	L7-L0 (2)	133	104
Flex Block Lock	36h	A31 / A23-A0	--	--	--	166	166
Flex Block Unlock	39h	A31 / A23-A0	--	--	--	166	166

6.2.9 QPI Commands Dependent in 3-Byte / 4-Byte Address Mode (ADS=1: A31–A0 / ADS=0: A23–A0)

Command *W25Q33RV/64RV/12RV*		**Opcode**	**Address Bytes**	**Read Bypass**	**Dummy Cycles**	**Data Bytes**	**Aligned Address**	**Any Address**
Number of Clock(IO 4-4-4)		2	2 / 2-2-2	M7-M0	N dummy	2 – 2…	MHz	MHz
Fast Read		0Bh	A31 / A23-A0	--	6	(D7-0)…	133	104
Set Read Parameters (C0h)	0 0 0		A31 / A23-A0	--	6 (Def)	(D7-0)…	133	104
	0 0 1		A31 / A23-A0	--	6	(D7-0)…	133	104
	0 1 0		A31 / A23-A0	--	6	(D7-0)…	133	104
	0 1 1		A31 / A23-A0	--	8	(D7-0)…	133	104
	1 0 0		A31 / A23-A0	--	10	(D7-0)…	133	104
	1 0 1		A31 / A23-A0	--	12	(D7-0)…	166	133
	1 1 0		A31 / A23-A0	--	14	(D7-0)…	166	133
	1 1 1		A31 / A23-A0	--	16	(D7-0)…	166	133
Burst Read with Wrap(13)		0Ch	A31 / A23-A0	--	6	(D7-0)…	133	104
Set Read Parameters (C0h)	0 0 0		A31 / A23-A0	--	6 (Def)	(D7-0)…	133	104
	0 0 1		A31 / A23-A0	--	6	(D7-0)…	133	104
	0 1 0		A31 / A23-A0	--	6	(D7-0)…	133	104
	0 1 1		A31 / A23-A0	--	8	(D7-0)…	133	104
	1 0 0		A31 / A23-A0	--	10	(D7-0)…	133	104
	1 0 1		A31 / A23-A0	--	12	(D7-0)…	166	133
	1 1 0		A31 / A23-A0	--	14	(D7-0)…	166	133
	1 1 1		A31 / A23-A0	--	16	(D7-0)…	166	133
Fast Read Quad I/O		EBh	A31 / A23-A0	2	4	(D7-0)…	133	104
Set Read Parameters (C0h) M7–0 serve as dummy bits	0 0 0		A31 / A23-A0	Disable	6 (Def)	(D7-0)…	133	104
	0 0 1		A31 / A23-A0	Disable	6	(D7-0)…	133	104
	0 1 0		A31 / A23-A0	Disable	6	(D7-0)…	133	104
	0 1 1		A31 / A23-A0	Disable	8	(D7-0)…	133	104
	1 0 0		A31 / A23-A0	Disable	10	(D7-0)…	133	104
	1 0 1		A31 / A23-A0	Disable	12	(D7-0)…	166	133
	1 1 0		A31 / A23-A0	Disable	14	(D7-0)…	166	133
	1 11		A31 / A23-A0	Disable	16	(D7-0)…	166	133

6.2.10 QPI Commands Dependent in 3-Byte / 4-Byte Address Mode (ADS=1: A31–A0 / ADS=0: A23–A0)

Command *W25Q33RV/64RV/12RV*		**Opcode**	**Address Bytes**	**Read Bypass**	**Dummy Cycles**	**Data Bytes**	**Aligned Address**	**Any Address**
Number of Clock(IO 4-4-4)		2	2 / 2-2-2	M7-M0	N dummy	2-2-2-2,…	MHz	MHz
Read checksum		9Ch	A31 / A23-A0	--	6	D(7-0,15-8,23-16,31-24)…	133	104
Set Read Parameters (C0h)	0 0 0		A31 / A23-A0	--	6 (Def)	D(7-0,15-8,23-16,31-24)…	133	104
	0 0 1		A31 / A23-A0	--	6	D(7-0,15-8,23-16,31-24)…	133	104
	0 1 0		A31 / A23-A0	--	6	D(7-0,15-8,23-16,31-24)…	133	104
	0 1 1		A31 / A23-A0	--	8	D(7-0,15-8,23-16,31-24)…	133	104
	1 0 0		A31 / A23-A0	--	10	D(7-0,15-8,23-16,31-24)…	133	104
	1 0 1		A31 / A23-A0	--	12	D(7-0,15-8,23-16,31-24)…	166	133
	1 1 0		A31 / A23-A0	--	14	D(7-0,15-8,23-16,31-24)…	166	133
	1 1 1		A31 / A23-A0	--	16	D(7-0,15-8,23-16,31-24)…	166	133
Command		Opcode	Address Bytes	Read Bypass	Dummy Cycles	Data Bytes	Aligned Address	Any Address
Number of Clock (IO 4-4-4)		2	2 / 2-2-2, 2-2-2-2	M7-M0	N dummy	2 – 2…	MHz	MHz
Calculate checksum		9Dh	SA31/SA23-0, EA31-EA0		--	--	166	166

6.2.11 SPI DTR Commands Dependent in 3-Byte / 4-Byte Address Mode (ADS=1: A31–A0, ADS=0: A23–A0)

Command *W25Q33RV/64RV/12RV*		**Opcode**	**Address Bytes**	**Read Bypass**	**Dummy Cycles**	**Data Bytes**	**Aligned Address**	**Any Address**
Number of Clock (IO 1-1d-1d)		8	8 / 8-8-8	M7-0	N dummy	4-…Clock	MHz	MHz
DTR Fast Read		0Dh	A31 / A23-A0	--	6	(D7-0)…	84	66
Number of Clock (IO 1-2d-2d)		8	2 / 2-2-2	M7-0	N dummy	2-…Clock	MHz	MHz
DTR Fast Read Dual I/O		BDh	A31 / A23-A0	2	4	(D7-0)…	84	66
Number of Clock (IO 1-4d-4d)		8	1 / 1-1-1	M7-0	N dummy	1…	MHz	MHz
DTR Fast Read Quad I/O		EDh	A31 / A23-A0	1	7	(D7-0)…	84	66
Set Read Parameters (C0h) M7–0 serve as dummy bits	0 0 0		A31 / A23-A0	Disable	8 (Def)	(D7-0)…	84	66
	0 0 1		A31 / A23-A0	Disable	8	(D7-0)…	84	66
	0 1 0		A31 / A23-A0	Disable	8	(D7-0)…	84	66
	0 1 1		A31 / A23-A0	Disable	8	(D7-0)…	84	66
	1 0 0		A31 / A23-A0	Disable	10	(D7-0)…	84	66
	1 0 1		A31 / A23-A0	Disable	12	(D7-0)…	104	84
	1 1 0		A31 / A23-A0	Disable	14	(D7-0)…	104	84
	1 1 1		A31 / A23-A0	Disable	16	(D7-0)…	104	84

6.2.12 SPI DTR Commands Operable in Both 3-Byte and 4-Byte Address Modes

Command *W25Q33RV/64RV/12RV*		**Opcode**	**Address Bytes**	**Read Bypass**	**Dummy Cycles**	**Data Bytes**	**Aligned Address**	**Any Address**
Number of Clock(IO 1-4d-4d)		8	1-1-1-1	M7-0	N dummy	1-…Clock	MHz	MHz
DTR Fast Read Quad I/O with 4-Byte Addr.		EEh	A31-A0	1	7	(D7-0)…	84	66
Set Read Parameters (C0h) M7–0 serve as dummy bits	0 0 0		A31-A0	Disable	8 (Def)	(D7-0)…	84	66
	0 0 1		A31-A0	Disable	8	(D7-0)…	84	66
	0 1 0		A31-A0	Disable	8	(D7-0)…	84	66
	0 1 1		A31-A0	Disable	8	(D7-0)…	84	66
	1 0 0		A31-A0	Disable	10	(D7-0)…	84	66
	1 0 1		A31-A0	Disable	12	(D7-0)…	104	84
	1 1 0		A31-A0	Disable	14	(D7-0)…	104	84
	1 1 1		A31-A0	Disable	16	(D7-0)…	104	84

6.2.13 QPI DTR Commands Dependent in 3-Byte / 4-Byte Address Mode (ADS=1: A31–A0, ADS=0: A23–A0)

Command *W25Q33RV/64RV/12RV*		**Opcode**	**Address Bytes**	**Read Bypass**	**Dummy Cycles**	**Data Bytes**	**Aligned Address**	**Any Address**
Number of Clock((IO 4-4d-4d)		2	1 / 1-1-1	M7-0	N dummy	1-…Clock	MHz	MHz
DTR Read with Wrap(12)		0Eh	A31 / A23-A0	1	7	(D7-0)…	84	66
Set Read Parameters (C0h) M7–0 serve as dummy bits	0 0 0		A31 / A23-A0	Disable	8 (Def)	(D7-0)…	84	66
	0 0 1		A31 / A23-A0	Disable	8	(D7-0)…	84	66
	0 1 0		A31 / A23-A0	Disable	8	(D7-0)…	84	66
	0 1 1		A31 / A23-A0	Disable	8	(D7-0)…	84	66
	1 0 0		A31 / A23-A0	Disable	10	(D7-0)…	84	66
	1 0 1		A31 / A23-A0	Disable	12	(D7-0)…	104	84
	1 1 0		A31 / A23-A0	Disable	14	(D7-0)…	104	84
	1 1 1		A31 / A23-A0	Disable	16	(D7-0)…	104	84
DTR Fast Read		0Dh	A31 / A23-A0	--	8	(D7-0)…	84	66
Set Read Parameters (C0h)	0 0 0		A31 / A23-A0	-	8 (Def)	(D7-0)…	84	66
	0 0 1		A31 / A23-A0	-	8	(D7-0)…	84	66
	0 1 0		A31 / A23-A0	-	8	(D7-0)…	84	66
	0 1 1		A31 / A23-A0	-	8	(D7-0)…	84	66
	1 0 0		A31 / A23-A0	-	10	(D7-0)…	84	66
	1 0 1		A31 / A23-A0	-	12	(D7-0)…	104	84
	1 1 0		A31 / A23-A0	-	14	(D7-0)…	104	84
	1 1 1		A31 / A23-A0	-	16	(D7-0)…	104	84

6.2.14 QPI DTR Commands Dependent in 3-Byte / 4-Byte Address Mode (ADS=1: A31–A0, ADS=0: A23–A0)

Command *W25Q33RV/64RV/12RV*		**Opcode**	**Address Bytes**	**Read Bypass**	**Dummy Cycles**	**Data Bytes**	**Aligned Address**	**Any Address**
Number of Clock (IO 4-4d-4d)		2	1 / 1-1-1	M7-0	N dummy	1-…Clock	MHz	MHz
DTR Fast Read Quad I/O		EDh	A31 / A23-A0	1	7	(D7-0)…	84	66
Set Read Parameters (C0h) M7–0 serve as dummy bits	0 0 0		A31 / A23-A0	Disable	8 (Def)	(D7-0)…	84	66
	0 0 1		A31 / A23-A0	Disable	8	(D7-0)…	84	66
	0 1 0		A31 / A23-A0	Disable	8	(D7-0)…	84	66
	0 1 1		A31 / A23-A0	Disable	8	(D7-0)…	84	66
	1 0 0		A31 / A23-A0	Disable	10	(D7-0)…	84	66
	1 0 1		A31 / A23-A0	Disable	12	(D7-0)…	104	84
	1 1 0		A31 / A23-A0	Disable	14	(D7-0)…	104	84
	1 1 1		A31 / A23-A0	Disable	16	(D7-0)…	104	84

6.2.15 QPI DTR Commands Operable in Both 3-Byte and 4-Byte Address Modes

Command *W25Q33RV/64RV/12RV*		**Opcode**	**Address Bytes**	**Read Bypass**	**Dummy Cycles**	**Data Bytes**	**Aligned Address**	**Any Address**
Number of Clock (IO 4-4d-4d)		2	1-1-1-1	M7-0	N dummy	1-…Clock	MHz	MHz
DTR Fast Read I/O with 4-Byte Address		EEh	A31-A0	1	7	(D7-0)…	84	66
Set Read Parameters (C0h) M7–0 serve as dummy bits	0 0 0		A31-A0	Disable	8 (Def)	(D7-0)…	84	66
	0 0 1		A31-A0	Disable	8	(D7-0)…	84	66
	0 1 0		A31-A0	Disable	8	(D7-0)…	84	66
	0 1 1		A31-A0	Disable	8	(D7-0)…	84	66
	1 0 0		A31-A0	Disable	10	(D7-0)…	84	66
	1 0 1		A31-A0	Disable	12	(D7-0)…	104	84
	1 1 0		A31-A0	Disable	14	(D7-0)…	104	84
	1 1 1		A31-A0	Disable	16	(D7-0)…	104	84

6.3 W25Q25RV/51RV/01RV/02RV Command Table with Maximum Clock Frequencies (MHz)[1]

6.3.1 SPI Commands Operable in Both 3-Byte and 4-Byte Address Modes

Command *W25Q25RV/51RV/01RV/02RV*	**Opcode**	**Address Bytes**	**Dummy Cycles**	**Data Bytes**	**Aligned Address**	**Any Address**
Number of Clock (IO 1-1-1)	8	8-8-8	N dummy	8 - 8…	MHz	MHz
Write Enable	06h	--	--	--	133	133
Volatile Status Register Write Enable	50h	--	--	--	133	133
Write Disable	04h	--	--	--	133	133
Release Power-down / ID	ABh	--	24	ID7-ID0	133	133
Read Manufacturer/Device ID	90h	00h,00h,00h	--	(MF7-0) - (ID7-ID0)	133	133
Read JEDEC ID	9Fh	--	--	(MF7-0) - (ID15-8) - (ID7-0)	133	133
Set Read Parameters	C0h	--	--	P7-P0	133	133
Chip Erase	C7h/60h	--	--	--	133	133
Read Status Register-1	05h	--	--	(S7-S0)	133	133
Write Status Register-1	01h	--	--	S7-S0	133	133
Read Status Register-2	35h	--	--	(S15-S8)	133	133
Write Status Register-2	31h	--	--	S15-S8	133	133
Read Status Register-3	15h	--	--	(S23-S16)	133	133
Write Status Register-3	11h	--	--	S23-S16	133	133
Read SFDP Register	5Ah	A23-A0	8	(D7-D0)	104	66
Global Block Lock	7Eh	--	--	--	133	133
Global Block Unlock	98h	--	--	--	133	133
Erase / Program Suspend	75h	--	--	--	133	133
Erase / Program Resume	7Ah	--	--	--	133	133
Power-down	B9h	--	--	--	133	133
Enter 4-Byte Address Mode	B7h	--	--	--	133	133
Exit 4-Byte Address Mode	E9h	--	--	--	133	133
Enter QPI Mode	38h	--	--	--	133	133
Enable Reset	66h	--	--	--	133	133
Reset Device	99h	--	--	--	133	133
Set Burst with Wrap	77h		24		133	133
Recovery for Erase	A8h	--	--	--	133	133

6.3.2 SPI Commands Operable in Both 3-Byte and 4-Byte Address Modes

Command *W25Q25RV/51RV/01RV/02RV*	**Opcode**	**Address Bytes**	**Read Bypass**	**Dummy Cycles**	**Data Bytes**	**Aligned Address**	**Any Address**
Number of Clock (IO 1-1-1)	8	8-8-8-8	M7-0	N dummy	8 - 8…	MHz	MHz
Read Data with 4-Byte Addr	13h	A31-A0	--	--	(D7-D0)	84	50
Fast Read with 4-Byte Addr	0Ch	A31-A0	--	8	(D7-D0)	104	66
Page Program with 4-Byte Addr	12h	A31-A0	--	--	(D7-D0)	104	66
4KB Sector Erase with 4-Byte Addr	21h	A31-A0	--	--	--	133	133
64KB Block Erase with 4-Byte Addr	DCh	A31-A0	--	--	--	133	133
Read Extended Address Register	C8h	--	--	--	(EA7-0)	133	133
Write Extended Address Register	C5h	--	--	--	EA7-0	133	133

Command	**Opcode**	**Address Bytes**	**Read Bypass**	**Dummy Cycles**	**Data Bytes**	**Aligned Address**	**Any Address**
Number of Clock (IO 1-1-1)	8	---	M7-0	N dummy	8 - 8…	MHz	MHz
Enter Factory Mode OP-1	51h	--	--	--	--	133	133
Enter Factory Mode OP-2	A5h	--	--	--	--	133	133
Enter Factory Mode OP-3	41h	--	--	--	--	133	133

6.3.3 SPI Commands Operable in Both 3-Byte and 4-Byte Address Modes

Command *W25Q25RV/51RV/01RV/02RV*		**Opcode**	**Address Bytes**	**Read Bypass**	**Dummy Cycles**	**Data Bytes**	**Aligned Address**	**Any Address**
Number of Clock (IO 1-1-2)		8	8-8-8-8	M7-0	N dummy	4 - … Clock	MHz	MHz
Fast Read Dual Output		3Ch	A31-A0	--	8	(D7-D0)…	104	66
Number of Clock (1-1-4)		8	8-8-8-8	M7-0	N dummy	2-…Clock	MHz	MHz
Quad Input Page Program		34h	A31-A0		--	D7-D0...	104	66
Fast Read Quad Output		6Ch	A31-A0	--	8	(D7-D0)	104	66
Number of Clock (1-2-2)		8	4-4-4-4	M7-0	N dummy	4-…Clock	MHz	MHz
Fast Read Dual I/O		BCh	A31-A0,	4	4	(D7-D0)	104	66
Number of Clock (1-4-4)		8	2-2-2-2	M7-0	N dummy	2-… Clock	MHz	MHz
Fast Read Quad I/O		ECh	A31-A0	2	4	(D7-D0)	104	66
Set Read Parameters (C0h) M7–0 serve as dummy bits	0 0 0		A31-A0	Disable	6 (Def)	(D7-0)…	104	66
	0 0 1		A31-A0	Disable	6	(D7-0)…	104	66
	0 1 0		A31-A0	Disable	6	(D7-0)…	104	66
	0 1 1		A31-A0	Disable	8	(D7-0)…	133	66
	1 0 0		A31-A0	Disable	10	(D7-0)…	133	66
	1 0 1		A31-A0	Disable	12	(D7-0)…	133	84
	1 1 0		A31-A0	Disable	14	(D7-0)…	133	84
	1 1 1		A31-A0	Disable	16	(D7-0)…	133	84

6.3.4 SPI Commands Dependent in 3‑Byte / 4‑Byte Address Mode (ADS=1: A31–A0 / ADS=0: A23–A0)

Command *W25Q25RV/51RV/01RV/02RV*	**Opcode**	**Address Bytes**	**Read Bypass**	**Dummy Cycles**	**Data Bytes**	**Aligned Address**	**Any Address**
Number of Clock (IO 1-1-1)	8	8 / 8-8-8	M7-0	N dummy	8-… Clock	MHz	MHz
Read Unique ID	4Bh	--		40 / 32	(D7-D0)…	104	66
Read Data	03h	A31 / A23-A0		--	(D7-D0)..	84	50
Fast Read	0Bh	A31 / A23-A0		8	(D7-D0)…	104	66
Page Program	02h	A31 / A23-A0		--	D7-D0…	104	66
4KB Sector Erase	20h	A31 / A23-A0		--	--	133	133
32KB Block Erase	52h	A31 / A23-A0		--	--	133	133
64KB Block Erase	D8h	A31 / A23-A0		--	--	133	133
Erase Security Register(5)	44h	A31 / A23-A0		--	--	133	133
Program Security Register(5)	42h	A31 / A23-A0		--	D7-D0…	133	133
Read Security Register(5)	48h	A31 / A23-A0		8	(D7-D0)…	104	66
Read Flex Block Lock	3Dh	A31 / A23-A0		--	(L7-L0)…	104	66
Flex Block Lock	36h	A31 / A23-A0		--	--	133	133
Flex Block Unlock	39h	A31 / A23-A0		--	--	133	133

Command *W25Q25RV/51RV/01RV/02RV*	Opcode	Address Bytes	Read Bypass	Dummy Cycles	Data Bytes	Aligned Address	Any Address
Number of Clock (IO 1-1-1)	8	8 / 8-8-8	M7-0	N dummy/ Clock	8 - 8…	MHz	MHz
Clear Buffer	81h(14)	BA31 / BA23-BA0	--	--	--	133	133
Write Buffer	82h(14)	BA31 / BA23-BA0	--	--	(D7-D0)	133	133
Read Buffer	83h(14)	BA31 / BA23-BA0	--	8	(D7-D0)	133	133
Program Buffer	8Ah	A31 / A23-A0	--	--	--	133	133
Load Buffer	8Bh	A31 / A23-A0	--	--	--	133	133

6.3.5 SPI Commands Dependent in 3-Byte / 4-Byte Address Mode (ADS=1: A31–A0 / ADS=0: A23–A0)

Command *W25Q25RV/51RV/01RV/02RV*	**Opcode**	**Address Bytes**	**Read Bypass**	**Dummy Cycles**	**Data Bytes**	**Aligned Address**	**Any Address**
Number of Clock (IO 1-1-1)	8	8 / 8-8-8	M7-M0	N dummy	8-8-8-8,…	MHz	MHz
Read checksum	9Ch	A31 / A23-A0	--	8	D(7-0,15-8,23-16,31-24),…	104	66
Command	Opcode	Address Bytes	Read Bypass	Dummy Cycles	Data Bytes	Aligned Address	Any Address
Number of Clock (IO 1-1-1)	8	8 / 8-8-8,8-8-8		N dummy	8-8-8-8	MHz	MHz
Calculate checksum	9Dh	SA31/SA23-0, EA31-EA0		--	--	133	133

Command *W25Q25RV/51RV/01RV/02RV*		**Opcode**	**Address Bytes**	**Read Bypass**	**Dummy Cycles**	**Data Bytes**	**Aligned Address**	**Any Address**
Number of Clock (IO 1-1-2)		8	8 / 8-8-8	M7-M0	N dummy	4-…	MHz	MHz
Fast Read Dual Output		3Bh	A31 / A23-A0	--	8	(D7-0)…	104	66
Number of Clock (IO 1-1-4)		8	8 / 8-8-8	M7-M0	N dummy	2-…	MHz	MHz
Quad Input Page Program		32h	A31 / A23-A0	--	--	D7-0…	104	66
Fast Read Quad Output		6Bh	A31 / A23-A0	--	8	(D7-0)…	104	66
Number of Clock (IO 1-2-2)			4 / 4-4-4	M7-M0	N dummy	4-…	MHz	MHz
Mftr./Device ID Dual I/O		92h	A31 / A23-8,00h	4-N/Allow	--	(MF7-0, ID7-ID0)	104	66
Fast Read Dual I/O		BBh	A31 / A23-A0	4	--	(D7-0)	104	66
Number of Clock (IO 1-4-4)			2 / 2-2-2-2-2	2	N dummy	2-… Clock	MHz	MHz
Mftr./Device ID Quad I/O		94h	A31 / A23-8,00h	2-N/Allow	4	(MF7-0, ID7-ID0)	104	66
Fast Read Quad I/O		EBh	A31 / A23-A0	2	4	(D7-0)…	104	66
Set Read Parameters (C0h) M7–0 serve as dummy bits	0 0 0		A31 / A23-A0	Disable	6(Def.)	(D7-0)…	104	66
	0 0 1		A31 / A23-A0	Disable	6	(D7-0)…	104	66
	0 1 0		A31 / A23-A0	Disable	6	(D7-0)…	104	66
	0 1 1		A31 / A23-A0	Disable	8	(D7-0)…	133	66
	1 0 0		A31 / A23-A0	Disable	10	(D7-0)…	133	66
	1 0 1		A31 / A23-A0	Disable	12	(D7-0)…	133	84
	1 1 0		A31 / A23-A0	Disable	14	(D7-0)…	133	84
	1 1 1		A31 / A23-A0	Disable	16	(D7-0)…	133	84

6.3.6 QPI Commands Operable in Both 3-Byte and 4-Byte Address Modes

Command *W25Q25RV/51RV/01RV/02RV*	**Opcode**	**Address Bytes**	**Read Bypass**	**Dummy Cycles**	**Data Bytes**	**Aligned Address**	**Any Address**
Number of Clock (IO 4-4-4)	2	2-2-2	M7-M0	N dummy	2-2…	MHz	MHz
Write Enable	06h	--	--	--	--	133	133
Volatile Status Register Write Enable	50h	--	--	--	--	133	133
Write Disable	04h	--	--	--	--	133	133
Release Power-down / ID	ABh	--	--	6	(ID7-ID0)	133	133
Read Manufacturer/Device ID	90h	--	--	4 Dummy + 00h	(MF7-0, ID7-ID0)	133	133
Read JEDEC ID	9Fh	--	--	--	(MF7-0) - (ID15-8) - (ID7-0)	133	133
Set Read Parameters	C0h	--	--	--	P7-P0	133	133
Chip Erase	C7h/60h	--	--	--	--	133	133
Read Status Register-1	05h	--	--	--	(S7-S0)	133	133
Write Status Register-1	01h	--	--	--	S7-S0	133	133
Read Status Register-2	35h	--	--	--	(S15-S8)	133	133
Write Status Register-2	31h	--	--	--	S15-S8	133	133
Read Status Register-3	15h	--	--	--	(S23-S16)	133	133
Write Status Register-3	11h	--	--	--	S23-S16	133	133
Read SFDP Register	5Ah	A23-16, A15-8, A7-0	--	2 Dummy	(D7-D0)	133	133
Global Block Lock	7Eh	--	--	--	--	133	133
Global Block Unlock	98h	--	--	--	--	133	133
Erase / Program Suspend	75h	--	--	--	--	133	133
Erase / Program Resume	7Ah	--	--	--	--	133	133
Power-down	B9h	--	--	--	--	133	133
Enter 4-Byte Address Mode	B7h	--	--	--	--	133	133
Exit 4-Byte Address Mode	E9h	--	--	--	--	133	133
Exit QPI Mode	FFh	--	--	--	--	133	133
Enable Reset	66h	--	--	--	--	133	133
Reset Device	99h	--	--	--	--	133	133
Recovery for Erase	A8h	--	--	--	--	133	133

6.3.7 QPI Commands Operable in Both 3-Byte and 4-Byte Address Modes

Command *W25Q25RV/51RV/01RV/02RV*	**Opcode**	**Address Bytes**	**Read Bypass**	**Dummy Cycles**	**Data Bytes**	**Aligned Address**	**Any Address**
Number of Clock(IO 4-4-4)	2	2-2-2-2	M7-0	N dummy	2-2…	MHz	MHz
Page Program with 4-Byte Addr	12h	A31-A0	--	--	(D7-D0)	133	133
4KB Sector Erase with 4-Byte Addr	21h	A31-A0	--	--	--	133	133
64KB Block Erase with 4-Byte Addr	DCh	A31-A0	--	--	--	133	133
Read Extended Address Register	C8h	--	--	--	(EA7-0)	133	133
Write Extended Address Register	C5h	--	--	--	EA7-0	133	133

Command *W25Q25RV/51RV/01RV/02RV*	**Opcode**	**Address Bytes**	**Read Bypass**	**Dummy Cycles**	**Data Bytes**	**Aligned Address**	**Any Address**
Number of Clock(IO 4-4-4)	2	---	M7-0	N dummy	8 - 8…	MHz	MHz
Enter Factory Mode OP-1	51h	--	--	--	--	133	133
Enter Factory Mode OP-2	A5h	--	--	--	--	133	133
Enter Factory Mode OP-3	41h	--	--	--	--	133	133

6.3.8 QPI Commands Dependent in 3-Byte / 4-Byte Address Mode (ADS=1: A31–A0 / ADS=0: A23–A0)

Command *W25Q25RV/51RV/01RV/02RV*	**Opcode**	**Address Bytes**	**Read Bypass**	**Dummy Cycles**	**Data Bytes**	**Aligned Address**	**Any Address**
Number of Clock(IO 4-4-4)	2	2 / 2-2-2	M7-M0	N dummy	2-2…	MHz	MHz
Page Program	02h	A31 / A23-A0	--	--	D7-0..	133	133
Sector Erase (4KB)	20h	A31 / A23-A0	--	--	--	133	133
Block Erase (32KB)	52h	A31 / A23-A0	--	--	--	133	133
Block Erase (64KB)	D8h	A31 / A23-A0	--	--		133	133
Read Flex Block Lock	3Dh	A31 / A23-A0	--	--	L7-L0 (2)	104	66
Flex Block Lock	36h	A31 / A23-A0	--	--	--	133	133
Flex Block Unlock	39h	A31 / A23-A0	--	--	--	133	133

6.3.9 QPI Commands Dependent in 3-Byte / 4-Byte Address Mode (ADS=1: A31–A0 / ADS=0: A23–A0)

Command *W25Q25RV/51RV/01RV/02RV*		**Opcode**	**Address Bytes**	**Read Bypass**	**Dummy Cycles**	**Data Bytes**	**Aligned Address**	**Any Address**
Number of Clock(IO 4-4-4)		2	2 / 2-2-2	M7-M0	N dummy	2 – 2…	MHz	MHz
Fast Read		0Bh	A31 / A23-A0	--	6	(D7-0)…	104	66
Set Read Parameters (C0h)	0 0 0		A31 / A23-A0	--	6 (Def)	(D7-0)…	104	66
	0 0 1		A31 / A23-A0	--	6	(D7-0)…	104	66
	0 1 0		A31 / A23-A0	--	6	(D7-0)…	104	66
	0 1 1		A31 / A23-A0	--	8	(D7-0)…	133	66
	1 0 0		A31 / A23-A0	--	10	(D7-0)…	133	66
	1 0 1		A31 / A23-A0	--	12	(D7-0)…	133	84
	1 1 0		A31 / A23-A0	--	14	(D7-0)…	133	84
	1 1 1		A31 / A23-A0	--	16	(D7-0)…	133	84
Burst Read with Wrap(13)		0Ch	A31 / A23-A0	--	6	(D7-0)…	104	66
Set Read Parameters (C0h)	0 0 0		A31 / A23-A0	--	6 (Def)	(D7-0)…	104	66
	0 0 1		A31 / A23-A0	--	6	(D7-0)…	104	66
	0 1 0		A31 / A23-A0	--	6	(D7-0)…	104	66
	0 1 1		A31 / A23-A0	--	8	(D7-0)…	133	66
	1 0 0		A31 / A23-A0	--	10	(D7-0)…	133	66
	1 0 1		A31 / A23-A0	--	12	(D7-0)…	133	84
	1 1 0		A31 / A23-A0	--	14	(D7-0)…	133	84
	1 1 1		A31 / A23-A0	--	16	(D7-0)…	133	84
Fast Read Quad I/O		EBh	A31 / A23-A0	2	4	--	104	66
Set Read Parameters (C0h) M7–0 serve as dummy bits	0 0 0		A31 / A23-A0	Disable	6 (Def)	(D7-0)…	104	66
	0 0 1		A31 / A23-A0	Disable	6	(D7-0)…	104	66
	0 1 0		A31 / A23-A0	Disable	6	(D7-0)…	104	66
	0 1 1		A31 / A23-A0	Disable	8	(D7-0)…	133	66
	1 0 0		A31 / A23-A0	Disable	10	(D7-0)…	133	66
	1 0 1		A31 / A23-A0	Disable	12	(D7-0)…	133	84
	1 1 0		A31 / A23-A0	Disable	14	(D7-0)…	133	84
	1 11		A31 / A23-A0	Disable	16	(D7-0)…	133	84

6.3.10 QPI Commands Dependent in 3-Byte / 4-Byte Address Mode (ADS=1: A31–A0 / ADS=0: A23–A0)

Command *W25Q25RV/51RV/01RV/02RV*		**Opcode**	**Address Bytes**	**Read Bypass**	**Dummy Cycles**	**Data Bytes**	**Aligned Address**	**Any Address**
Number of Clock(IO 4-4-4)		2	2 / 2-2-2	M7-M0	N dummy	2-2-2-2,…	MHz	MHz
Read checksum		9Ch	A31 / A23-A0	--	6	D(7-0,15-8,23-16,31-24)…	104	66
Set Read Parameters (C0h)	0 0 0		A31 / A23-A0	--	6 (Def)	D(7-0,15-8,23-16,31-24)…	104	66
	0 0 1		A31 / A23-A0	--	6	D(7-0,15-8,23-16,31-24)…	104	66
	0 1 0		A31 / A23-A0	--	6	D(7-0,15-8,23-16,31-24)…	104	66
	0 1 1		A31 / A23-A0	--	8	D(7-0,15-8,23-16,31-24)…	133	66
	1 0 0		A31 / A23-A0	--	10	D(7-0,15-8,23-16,31-24)…	133	66
	1 0 1		A31 / A23-A0	--	12	D(7-0,15-8,23-16,31-24)…	133	84
	1 1 0		A31 / A23-A0	--	14	D(7-0,15-8,23-16,31-24)…	133	84
	1 1 1		A31 / A23-A0	--	16	D(7-0,15-8,23-16,31-24)…	133	84
Command		Opcode	Address Bytes	Read Bypass	Dummy Cycles	Data Bytes	Aligned Address	Any Address
Number of Clock (IO 4-4-4)		2	2 / 2-2-2, 2-2-2-2	M7-M0	N dummy	2 – 2…	MHz	MHz
Calculate checksum		9Dh	SA31/SA23-0, EA31-EA0		--	--	133	133

6.3.11 SPI DTR Commands Dependent in 3-Byte / 4-Byte Address Mode (ADS=1: A31–A0, ADS=0: A23–A0)

Command *W25Q25RV/51RV/01RV/02RV*		**Opcode**	**Address Bytes**	**Read Bypass**	**Dummy Cycles**	**Data Bytes**	**Aligned Address**	**Any Address**
Number of Clock (IO 1-1d-1d)		8	8 / 8-8-8	M7-0	N dummy	4-…Clock	MHz	MHz
DTR Fast Read		0Dh	A31 / A23-A0	--	6	(D7-0)…	84	50
Number of Clock (IO 1-2d-2d)		8	2 / 2-2-2	M7-0	N dummy	2-…Clock		
DTR Fast Read Dual I/O		BDh	A31 / A23-A0	2	4	(D7-0)…	84	50
Number of Clock (IO 1-4d-4d)		8	1 / 1-1-1	M7-0	N dummy	1…	MHz	MHz
DTR Fast Read Quad I/O		EDh	A31 / A23-A0	1	7	(D7-0)…	84	50
Set Read Parameters (C0h) M7–0 serve as dummy bits	0 0 0		A31 / A23-A0	Disable	8 (Def)	(D7-0)…	84	50
	0 0 1		A31 / A23-A0	Disable	8	(D7-0)…	84	50
	0 1 0		A31 / A23-A0	Disable	8	(D7-0)…	84	50
	0 1 1		A31 / A23-A0	Disable	8	(D7-0)…	84	50
	1 0 0		A31 / A23-A0	Disable	10	(D7-0)…	84	50
	1 0 1		A31 / A23-A0	Disable	12	(D7-0)…	104	66
	1 1 0		A31 / A23-A0	Disable	14	(D7-0)…	104	66
	1 1 1		A31 / A23-A0	Disable	16	(D7-0)…	104	66

6.3.12 SPI DTR Commands Operable in Both 3-Byte and 4-Byte Address Modes

Command *W25Q25RV/51RV/01RV/02RV*		**Opcode**	**Address Bytes**	**Read Bypass**	**Dummy Cycles**	**Data Bytes**	**Aligned Address**	**Any Address**
Number of Clock((IO 1-4d-4d)		8	1-1-1-1	M7-0	N dummy	1-…Clock	MHz	MHz
DTR Fast Read Quad I/O with 4-Byte Addr.		EEh	A31-A0	1	7	(D7-0)…	84	50
Set Read Parameters (C0h) M7–0 serve as dummy bits	0 0 0		A31-A0	Disable	8 (Def)	(D7-0)…	84	50
	0 0 1		A31-A0	Disable	8	(D7-0)…	84	50
	0 1 0		A31-A0	Disable	8	(D7-0)…	84	50
	0 1 1		A31-A0	Disable	8	(D7-0)…	84	50
	1 0 0		A31-A0	Disable	10	(D7-0)…	84	50
	1 0 1		A31-A0	Disable	12	(D7-0)…	104	66
	1 1 0		A31-A0	Disable	14	(D7-0)…	104	66
	1 1 1		A31-A0	Disable	16	(D7-0)…	104	66

6.3.13 QPI DTR Commands Dependent in 3-Byte / 4-Byte Address Mode (ADS=1: A31–A0, ADS=0: A23–A0)

Command *W25Q25RV/51RV/01RV/02RV*		**Opcode**	**Address Bytes**	**Read Bypass**	**Dummy Cycles**	**Data Bytes**	**Aligned Address**	**Any Address**
Number of Clock((IO 4-4d-4d)		2	1 / 1-1-1	M7-0	N dummy	1-…Clock	MHz	MHz
DTR Read with Wrap[12]		0Eh	A31 / A23-A0	1	7	(D7-0)…	84	50
Set Read Parameters (C0h) M7–0 serve as dummy bits	0 0 0		A31 / A23-A0	Disable	8 (Def)	(D7-0)…	84	50
	0 0 1		A31 / A23-A0	Disable	8	(D7-0)…	84	50
	0 1 0		A31 / A23-A0	Disable	8	(D7-0)…	84	50
	0 1 1		A31 / A23-A0	Disable	8	(D7-0)…	84	50
	1 0 0		A31 / A23-A0	Disable	10	(D7-0)…	84	50
	1 0 1		A31 / A23-A0	Disable	12	(D7-0)…	104	66
	1 1 0		A31 / A23-A0	Disable	14	(D7-0)…	104	66
	1 1 1		A31 / A23-A0	Disable	16	(D7-0)…	104	66
DTR Fast Read		0Dh	A31 / A23-A0	--	8	(D7-0)…	84	50
Set Read Parameters (C0h)	0 0 0		A31 / A23-A0	-	8 (Def)	(D7-0)…	84	50
	0 0 1		A31 / A23-A0	-	8	(D7-0)…	84	50
	0 1 0		A31 / A23-A0	-	8	(D7-0)…	84	50
	0 1 1		A31 / A23-A0	-	8	(D7-0)…	84	50
	1 0 0		A31 / A23-A0	-	10	(D7-0)…	84	50
	1 0 1		A31 / A23-A0	-	12	(D7-0)…	104	66
	1 1 0		A31 / A23-A0	-	14	(D7-0)…	104	66
	1 1 1		A31 / A23-A0	-	16	(D7-0)…	104	66

6.3.14 QPI DTR Commands Dependent in 3-Byte / 4-Byte Address Mode (ADS=1: A31–A0, ADS=0: A23–A0)

Command *W25Q25RV/51RV/01RV/02RV*		**Opcode**	**Address Bytes**	**Read Bypass**	**Dummy Cycles**	**Data Bytes**	**Aligned Address**	**Any Address**
Number of Clock (IO 4-4d-4d)		2	1 / 1-1-1	M7-0	N dummy	1-…Clock	MHz	MHz
DTR Fast Read Quad I/O		EDh	A31 / A23-A0	1	7	(D7-0)…	84	50
Set Read Parameters (C0h) M7–0 serve as dummy bits	0 0 0		A31 / A23-A0	Disable	8 (Def)	(D7-0)…	84	50
	0 0 1		A31 / A23-A0	Disable	8	(D7-0)…	84	50
	0 1 0		A31 / A23-A0	Disable	8	(D7-0)…	84	50
	0 1 1		A31 / A23-A0	Disable	8	(D7-0)…	84	50
	1 0 0		A31 / A23-A0	Disable	10	(D7-0)…	84	50
	1 0 1		A31 / A23-A0	Disable	12	(D7-0)…	104	66
	1 1 0		A31 / A23-A0	Disable	14	(D7-0)…	104	66
	1 1 1		A31 / A23-A0	Disable	16	(D7-0)…	104	66

6.3.15 QPI DTR Commands Operable in Both 3-Byte and 4-Byte Address Modes

Command *W25Q25RV/51RV/01RV/02RV*		**Opcode**	**Address Bytes**	**Read Bypass**	**Dummy Cycles**	**Data Bytes**	**Aligned Address**	**Any Address**
Number of Clock (IO 4-4d-4d)		2	1-1-1-1	M7-0	N dummy	1-…Clock	MHz	MHz
DTR Fast Read I/O with 4-Byte Address		EEh	A31-A0	1	7	(D7-0)…	84	50
Set Read Parameters (C0h) M7–0 serve as dummy bits	0 0 0		A31-A0	Disable	8 (Def)	(D7-0)…	84	50
	0 0 1		A31-A0	Disable	8	(D7-0)…	84	50
	0 1 0		A31-A0	Disable	8	(D7-0)…	84	50
	0 1 1		A31-A0	Disable	8	(D7-0)…	84	50
	1 0 0		A31-A0	Disable	10	(D7-0)…	84	50
	1 0 1		A31-A0	Disable	12	(D7-0)…	104	66
	1 1 0		A31-A0	Disable	14	(D7-0)…	104	66
	1 1 1		A31-A0	Disable	16	(D7-0)…	104	66

Notes:

1. Data bytes are shifted with Most Significant Bit first. Byte fields with data in parenthesis "***D7-D0***" indicate data output from the device on either 1, 2 or 4 IO pins. The output data address is increase through the clock input. " Byte fields with data in parenthesis "D7-D0" indicate data input to the device on either 1, 2 or 4 IO pins. The input data address is increase through the clock input. "
2. The Status Register contents, and Device ID will repeat continuously until /CS terminates the instruction.
3. At least one byte of data input is required for Page Program, Quad Page Program, Write Buffer and Program Security Registers, up to 256 bytes of data input. If more than 256 bytes of data are sent to the device, the addressing will wrap to the beginning of the page and overwrite previously sent data.
4. Security Register Address:
   Security Register 1: A23-16 = 00h; A15-8 = 10h; A7-0 = byte address
   Security Register 2: A23-16 = 00h; A15-8 = 20h; A7-0 = byte address
   Security Register 3: A23-16 = 00h; A15-8 = 30h; A7-0 = byte address
5. Dual SPI address input format:
   IO0 = A22, A20, A18, A16, A14, A12, A10, A8 A6, A4, A2, A0, M6, M4, M2, M0
   IO1 = A23, A21, A19, A17, A15, A13, A11, A9 A7, A5, A3, A1, M7, M5, M3, M1
6. Dual SPI data input/output format:
   IO0 = (D6, D4, D2, D0)
   IO1 = (D7, D5, D3, D1)
7. Quad SPI address input format:
   IO0 = A20, A16, A12, A8, A4, A0, M4, M0
   IO1 = A21, A17, A13, A9, A5, A1, M5, M1
   IO2 = A22, A18, A14, A10, A6, A2, M6, M2
   IO3 = A23, A19, A15, A11, A7, A3, M7, M3

   Set Burst with Wrap input format:
   IO0 = x, x, x, x, x, x, W4, x
   IO1 = x, x, x, x, x, x, W5, x
   IO2 = x, x, x, x, x, x, W6, x
   IO3 = x, x, x, x, x, x, x
8. Quad SPI data input/output format:
   IO0 = (D4, D0, …..)
   IO1 = (D5, D1, …..)
   IO2 = (D6, D2, …..)
   IO3 = (D7, D3, …..)
9. Fast Read Quad I/O data output format:
   IO0 = (x, x, x, x, D4, D0, D4, D0)
   IO1 = (x, x, x, x, D5, D1, D5, D1)
   IO2 = (x, x, x, x, D6, D2, D6, D2)
   IO3 = (x, x, x, x, D7, D3, D7, D3)
10. QPI Command, Address, Data input/output format:

CLK # 0	*1*	*2*	*3*	*4*	*5*	*6*	*7*	*8*	*9*	*10*	*11*
IO0 = C4,	C0,	A20,	A16,	A12,	A8,	A4,	A0,	D4,	D0,	D4,	D0
IO1 = C5,	C1,	A21,	A17,	A13,	A9,	A5,	A1,	D5,	D1,	D5,	D1
IO2 = C6,	C2,	A22,	A18,	A14,	A10,	A6,	A2,	D6,	D2,	D6,	D2
IO3 = C7,	C3,	A23,	A19,	A15,	A11,	A7,	A3,	D7,	D3,	D7,	D3

11. The number of dummy clocks for QPI Fast Read, SPI/QPI Fast Read Quad I/O, SPI/QPI Read Checksum & QPI Burst Read with Wrap, Read Checksum & QPI Burst Read with Wrap is controlled by read parameter P7 – P4.
12. The wrap around length for QPI Burst Read with Wrap is controlled by read parameter P3 – P0.
13. The first dummy is M7-M0 should be set to FFh/Fxh; once read command bypass mode is not used.
14. The Buffer Address (BA) field is used to access the contents of the Page Buffer, which holds a total of 256 bytes.

Clear Buffer 81h: BA31-26 = xxh;BA25-24 = Die Select / BA23-16 = xxh; BA15-8 = xxh; BA7-0 = xxh
Write Buffer 82h: BA31-26 = xxh;BA25-24 = Die Select / BA23-16 = xxh; BA15-8 = xxh; BA7-0 = byte address
Read Buffer 83h: BA31-26 = xxh;BA25-24 = Die Select / BA23-16 = xxh; BA15-8 = xxh; BA7-0 = byte address

6.4 Instruction Descriptions

6.4.1 Write Enable (06h)

The Write Enable instruction Figure 6.4 sets the Write Enable Latch (WEL) bit in the Status Register to a 1. The WEL bit must be set prior to every Page Program, Quad Page Program, Sector Erase, Block Erase, Chip Erase, Write Status Register and Erase/Program Security Registers instruction. The Write Enable instruction is entered by driving /CS low, shifting the instruction code “06h” into the Data Input (DI) pin on the rising edge of CLK, and then driving /CS high.

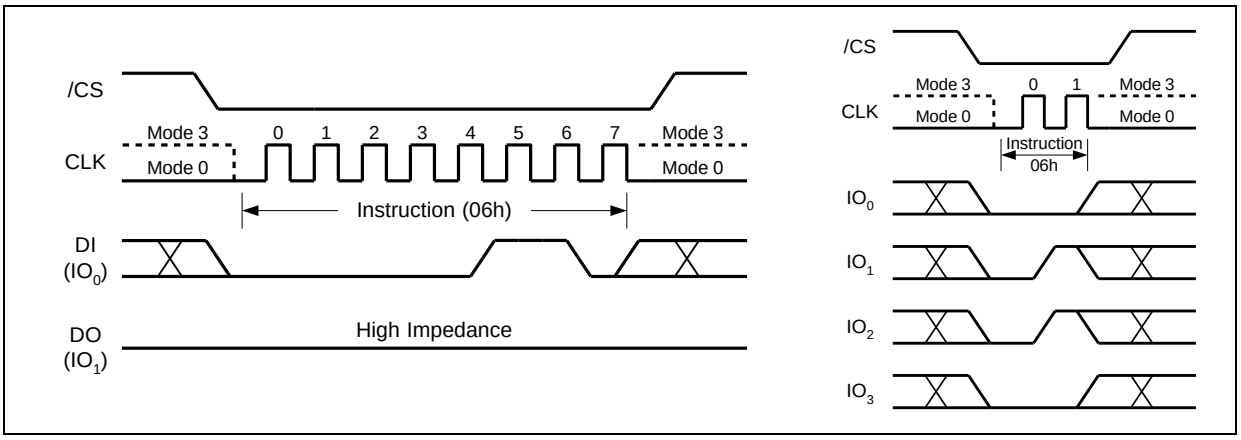

Figure 6.4.1 Write Enable instruction

6.4.2 Write Enable for Volatile Status Register (50h)

The non-volatile Status Register bits described in section 7.1 can also be written to as volatile bits. This gives more flexibility to change the system configuration and memory protection schemes quickly without waiting for the typical non-volatile bit write cycles or affecting the endurance of the Status Register non-volatile bits. To write the volatile values into the Status Register bits, the Write Enable for Volatile Status Register (50h) instruction must be issued prior to a Write Status Register (01h/31h/11h) instruction. The Write Enable for Volatile Status Register Instruction-Figure 6.4.2 will not set the Write Enable Latch (WEL) bit. Only the Write Status Register instruction can change the volatile Status Register bit values.

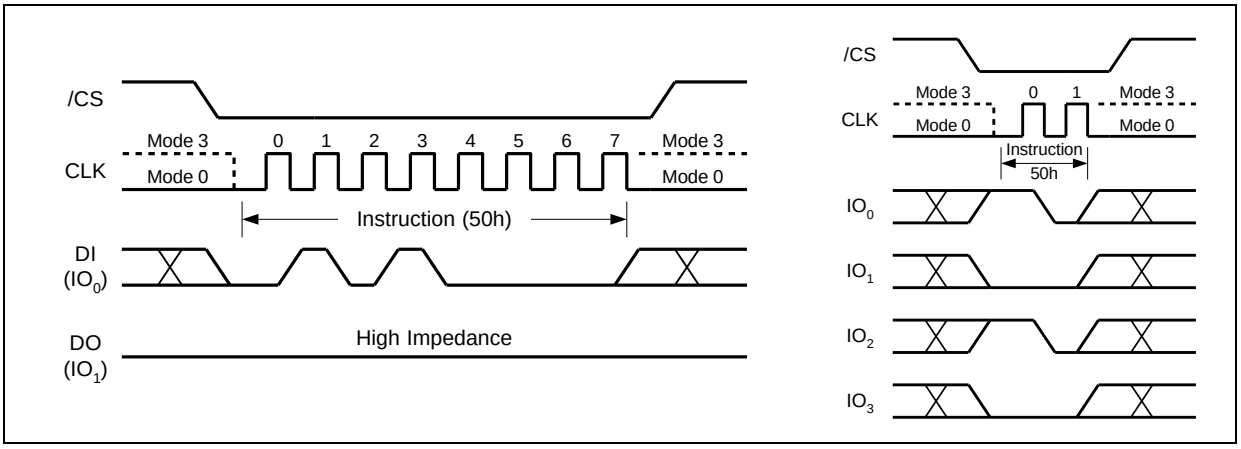

Figure 6.4.2 Write Enable for Volatile Status Register Instruction for SPI Mode (left) or QPI Mode (right)

6.4.3 Write Disable (04h)

The Write Disable instruction (Figure 6.4.3) resets the Write Enable Latch (WEL) bit in the Status Register to a 0. The Write Disable instruction is entered by driving /CS low, shifting the instruction code “04h” into the DI pin and then driving /CS high. Note that the WEL bit is automatically reset after Power-up and upon completion of the Write Status Register, Erase/Program Security Registers, Page Program, Quad Page Program, Sector Erase, Block Erase, Chip Erase and Reset instructions.

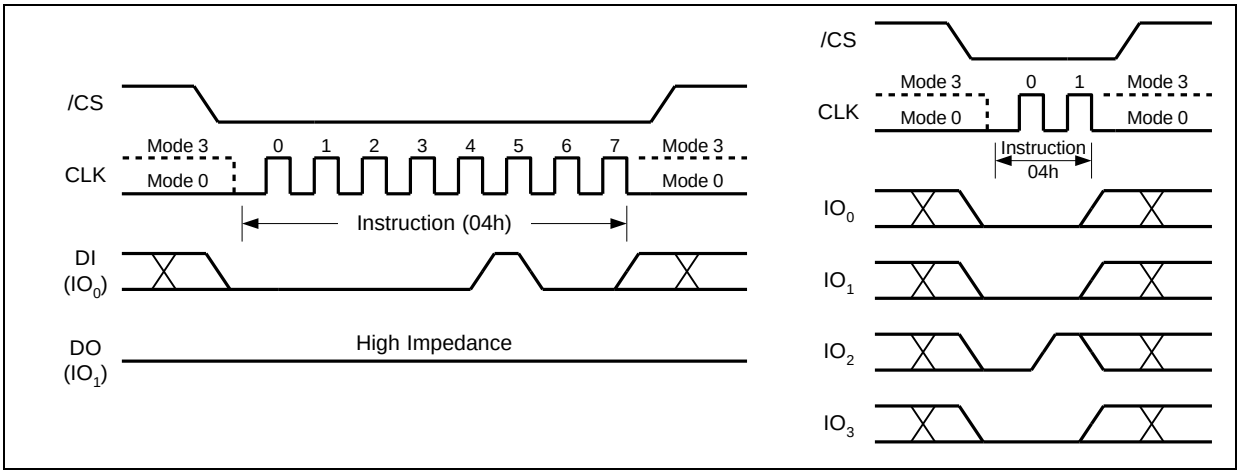

Figure 6.4.3 Write Disable Instruction for SPI Mode (left) or QPI Mode (right)

6.4.4 Read Status Register-1 (05h), Status Register-2 (35h) & Status Register-3 (15h)

The Read Status Register instructions allow the 8-bit Status Registers to be read. The instruction is entered by driving /CS low and shifting the instruction code “05h” for Status Register-1, “35h” for Status Register-2 or “15h” for Status Register-3 into the DI pin on the rising edge of CLK. The status register bits are then shifted out on the DO pin at the falling edge of CLK with the most significant bit (MSB) first as shown in Figure 6.4.4..

The Read Status Register instruction may be used at any time, even while a Program, Erase or Write Status Register cycle is in progress. This allows the BUSY status bit to be checked to determine when the cycle is complete and if the device can accept another instruction. The Status Register can be read continuously, as shown in Figure 6.4.4 The instruction is completed by driving /CS high.

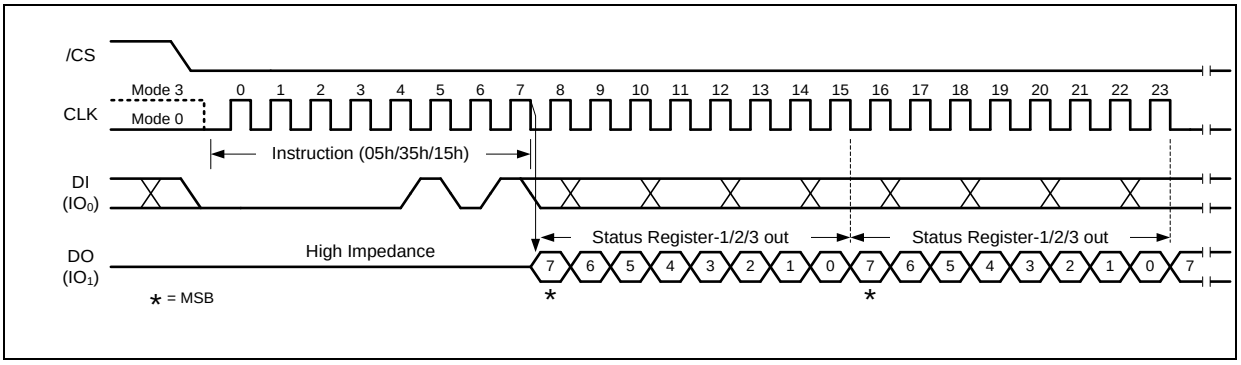

Figure 6.4.4a Read Status Register Instruction (SPI Mode)

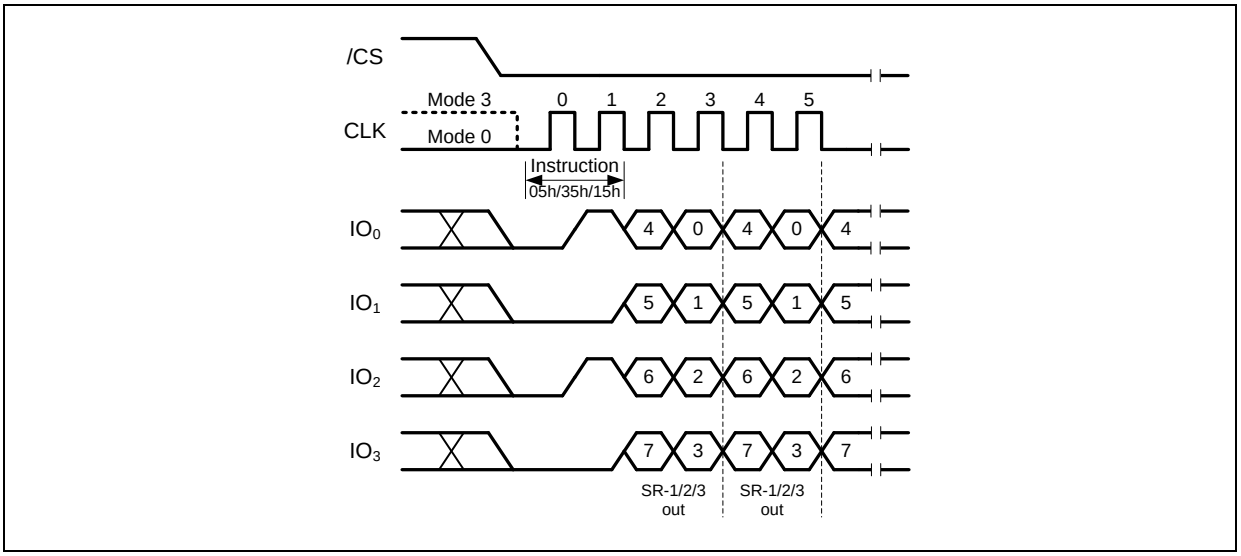

Figure 6.4.4b. Read Status Register Instruction (QPI Mode)

6.4.5 Write Status Register-1 (01h), Status Register-2 (31h) & Status Register-3 (11h)

The Write Status Register instruction allows the Status Registers to be written. The writable Status Register bits include SRP, TB, BP[3:0] in Status Register-1; CMP, LB[3:1], QE, SRL in Status Register-2; HOLD/RST, DRV1, DRV0, WPS & ADP in Status Register-3. All other Status Register bit locations are read-only and will not be affected by the Write Status Register instruction. LB[3:1] are non-volatile OTP bits. Once set to 1, the bits cannot be cleared to 0.

To write non-volatile Status Register bits, a standard Write Enable (06h) instruction must previously have been executed for the device to accept the Write Status Register instruction (Status Register bit WEL must equal 1). Once write enabled, the instruction is entered by driving /CS low, sending the instruction code “01h/31h/11h”, and then writing the status register data byte as illustrated in Figure 6.4.5.

To write volatile Status Register bits, a Write Enable for Volatile Status Register (50h) instruction must have been executed prior to the Write Status Register instruction (Status Register bit WEL remains 0). However, SRL and LB[3:1] cannot be changed from “1” to “0” because of the OTP protection for these bits. Upon power off or the execution of a Software/Hardware Reset, the volatile Status Register bit values will be lost, and the non-volatile Status Register bit values will be restored.

During the non-volatile Status Register write operation (06h combined with 01h/31h/11h), after /CS is driven high, the self-timed Write Status Register cycle will commence for a time duration of t_W (See AC Characteristics). While the Write Status Register cycle is in progress, the Read Status Register instruction may still be accessed to check the status of the BUSY bit. The BUSY bit is a 1 during the Write Status Register cycle and a 0 when the cycle is finished and ready to accept other instructions again. After the Write Status Register cycle has finished, the Write Enable Latch (WEL) bit in the Status Register will be cleared to 0.

During volatile Status Register write operation (50h combined with 01h/31h/11h), after /CS is driven high, the Status Register bits will be refreshed to the new values within the time period of t_{SHSL2} (See AC Characteristics). The BUSY bit will remain 0 during the Status Register bit refresh period.

The Write Status Register instruction can be used in both SPI mode and QPI mode. However, the QE bit cannot be written to when the device is in the QPI mode, because QE=1 is required for the device to enter and operate in the QPI mode.

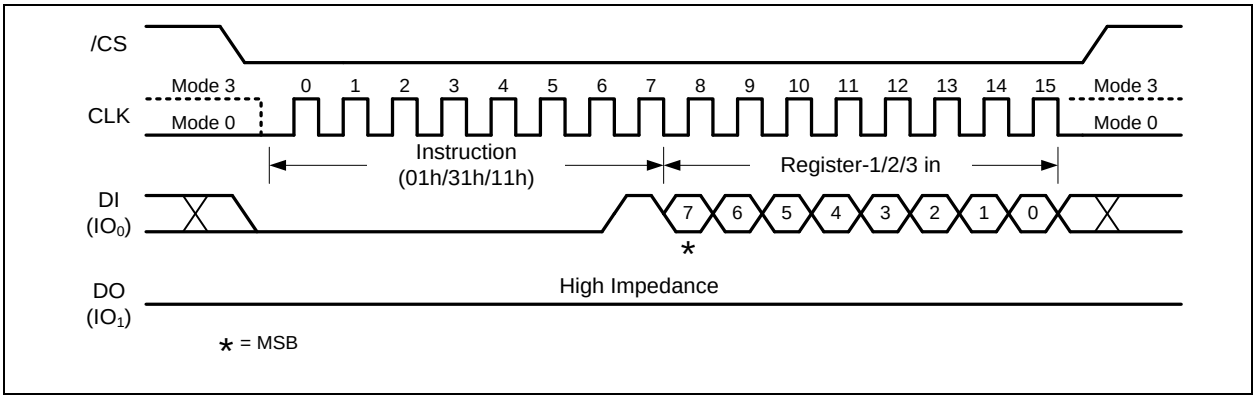

Figure 6.4.5a. Write Status Register-1/2/3 Instruction (SPI Mode)

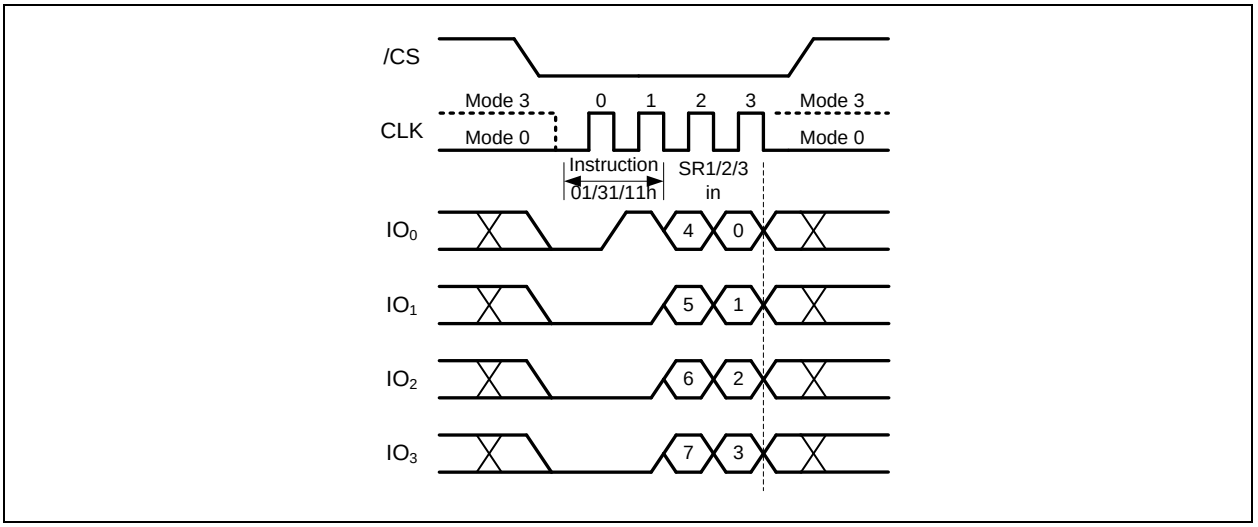

Figure 6.4.5b. Write Status Register-1/2/3 Instruction (QPI Mode)

6.4.6 Read Extended Address Register (C8h)

When the device is in the 3-Byte Address Mode, the Extended Address Register is used as the 4th address byte A[31:24] to access memory regions beyond 128Mb. The Read Extended Address Register instruction is entered by driving /CS low and shifting the instruction code "C8h" into the DI pin on the rising edge of CLK. The Extended Address Register bits are then shifted out on the DO pin at the falling edge of CLK with the most significant bit (MSB) first as shown in Figure 6.4.6.

When the device is in the 4-Byte Address Mode, the Extended Address Register is not used.

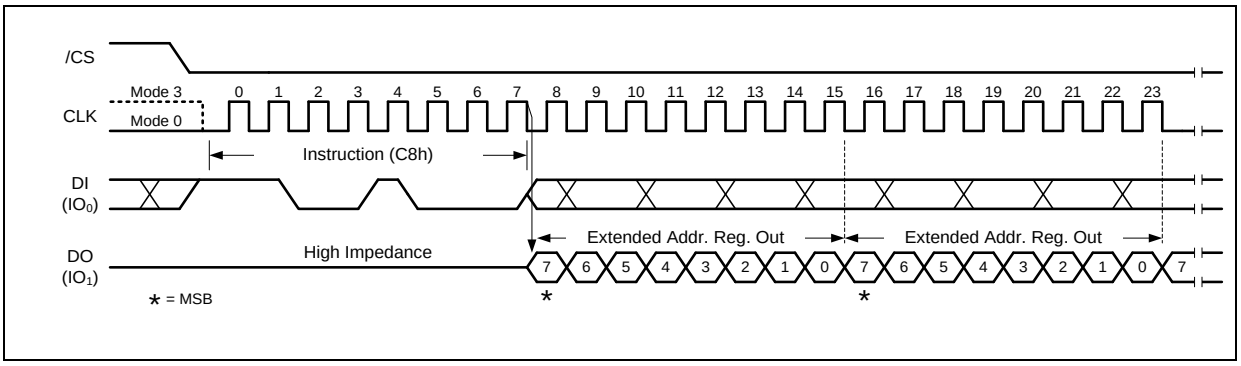

Figure 6.4.6 a. Read Extended Address Register Instruction (SPI Mode)

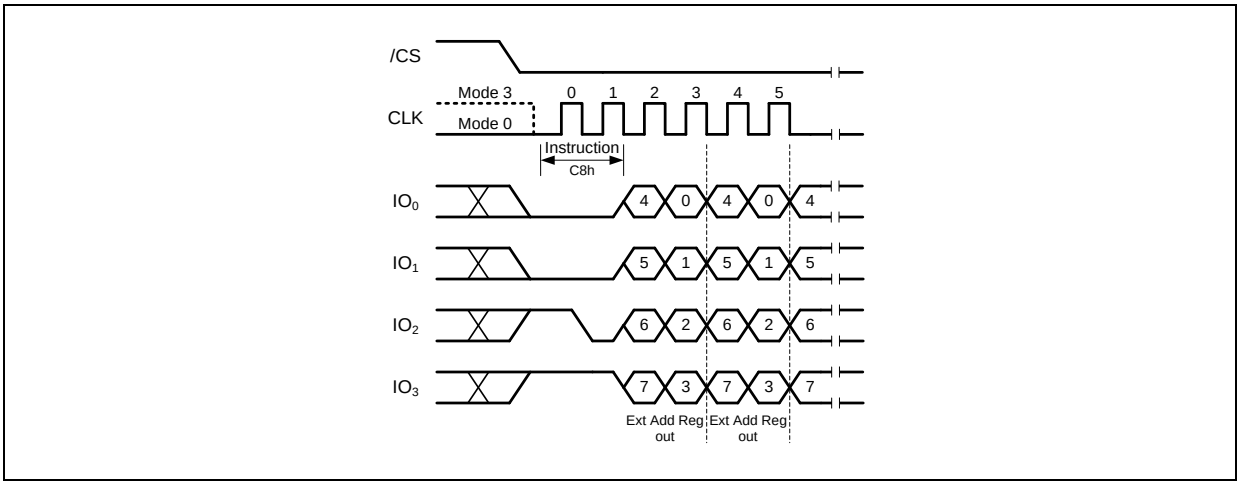

Figure 6.4.6 b. Read Extended Address Register Instruction (QPI Mode)

6.4.7 Write Extended Address Register (C5h)

The Extended Address Register is a volatile register that stores the 4th byte address (A31-A24) when the device is operating in the 3-Byte Address Mode (ADS=0). To write the Extended Address Register bits, a Write Enable (06h) instruction must previously have been executed for the device to accept the Write Extended Address Register instruction (Status Register bit WEL must equal 1). Once write enabled, the instruction is entered by driving /CS low, sending the instruction code "C5h", and then writing the Extended Address Register data byte as illustrated in Figure 6.4.7.

Upon power up or the execution of a Software/Hardware Reset, the Extended Address Register bit values will be cleared to 0.

The Extended Address Register is only effective when the device is in the 3-Byte Address Mode. When the device operates in the 4-Byte Address Mode (ADS=1), any command with address input of A31-A24 will replace the Extended Address Register values. It is recommended to check and update the Extended Address Register if necessary when the device is switched from 4-Byte to 3-Byte Address Mode.

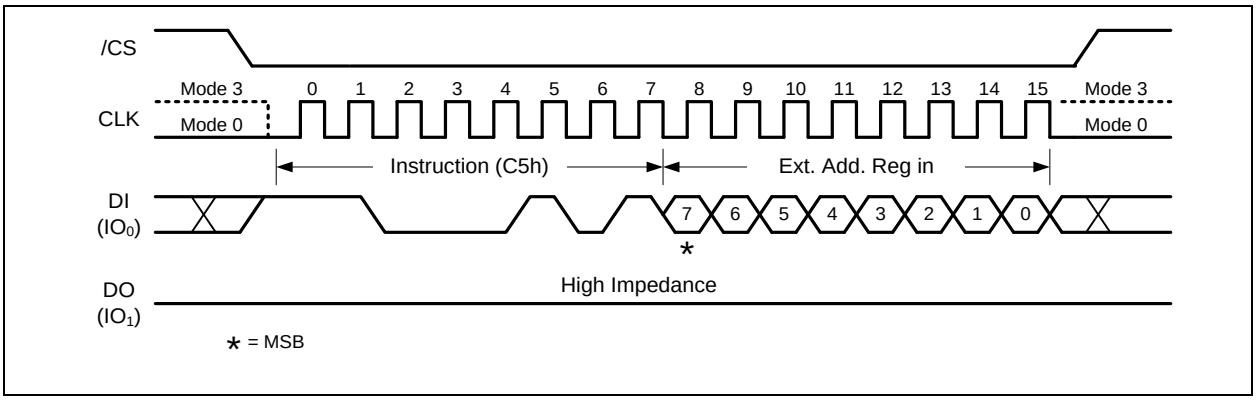

Figure 6.4.7a. Write Extended Address Register Instruction (SPI Mode)

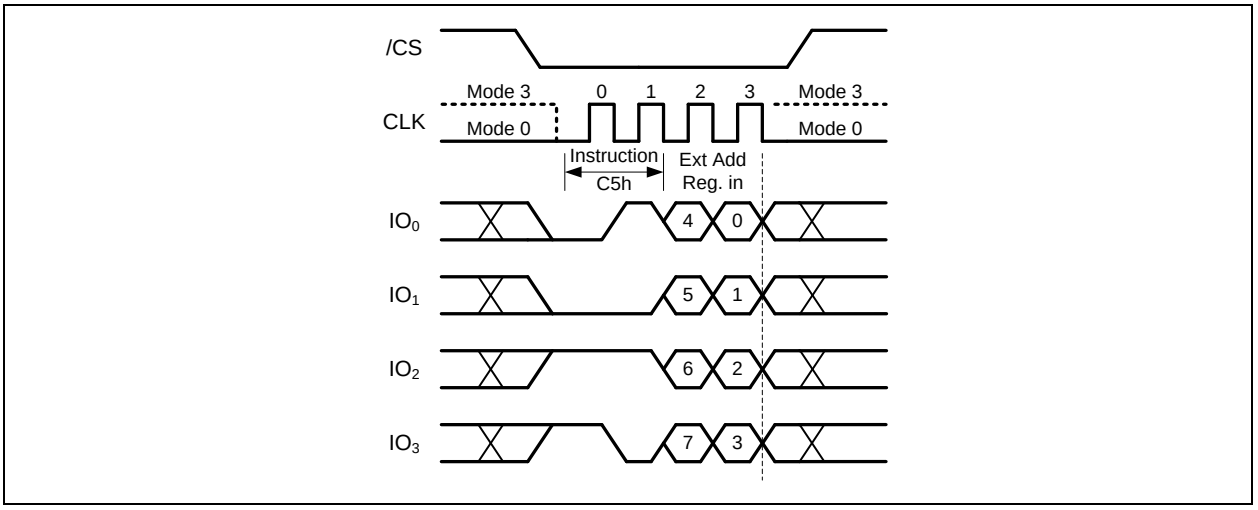

Figure 6.4.7b. Write Extended Address Register Instruction (QPI Mode)

6.4.8 Enter 4-Byte Address Mode (B7h)

The Enter 4-Byte Address Mode instruction will allow 32-bit address (A31-A0) to be used to access the memory array beyond 128Mb. The Enter 4-Byte Address Mode instruction is entered by driving /CS low, shifting the instruction code “B7h” into the DI pin and then driving /CS high.

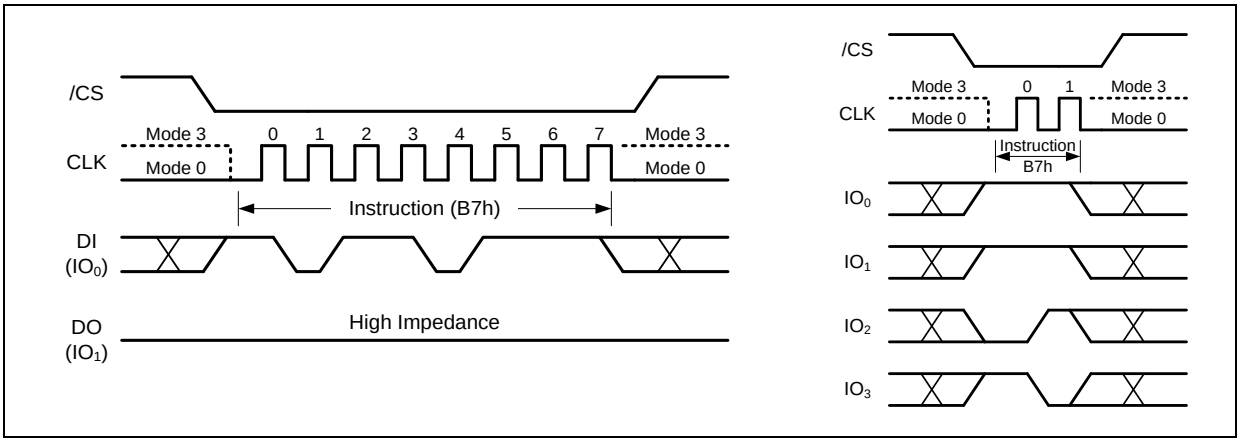

Figure 6.4.8. Enter 4-Byte Address Mode instruction for SPI Mode (left) or QPI Mode (right)

6.4.9 Exit 4-Byte Address Mode (E9h)

In order to be backward compatible, the Exit 4-Byte Address Mode instruction will only allow 24-bit address (A23-A0) to be used to access the memory array up to 128Mb. The Extended Address Register must be used to access the memory array beyond 128Mb. The Exit 4-Byte Address Mode instruction is entered by driving /CS low, shifting the instruction code “E9h” into the DI pin and then driving /CS high.

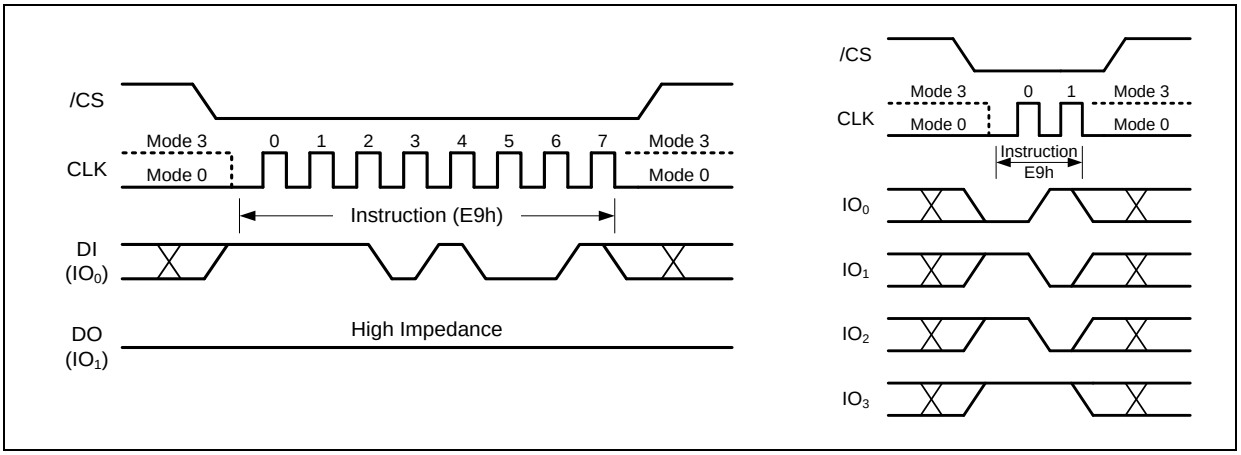

Figure 6.4.9. Exit 4-Byte Address Mode instruction for SPI Mode (left) or QPI Mode (right)

6.4.10 Read Data (03h)

The Read Data instruction allows one or more data bytes to be sequentially read from the memory. The instruction is initiated by driving the /CS pin low and then shifting the instruction code “03h” followed by a 32/24-bit address (A31/A23-A0) into the DI pin. The code and address bits are latched on the rising edge of the CLK pin. After the address is received, the data byte of the addressed memory location will be shifted out on the DO pin at the falling edge of CLK with most significant bit (MSB) first. The address is automatically incremented to the next higher address after each byte of data is shifted out allowing for a continuous stream of data. This means that the entire memory can be accessed with a single instruction as long as the clock continues. The instruction is completed by driving /CS high.

The Read Data instruction sequence is shown below. If a Read Data instruction is issued while an Erase, Program or Write cycle is in process (BUSY=1), the instruction is ignored and will not have any effect on the current cycle. The Read Data instruction allows clock rates from D.C. to a maximum of f_R (see AC Electrical Characteristics).

The Read Data (03h) instruction is only supported in Standard SPI mode.

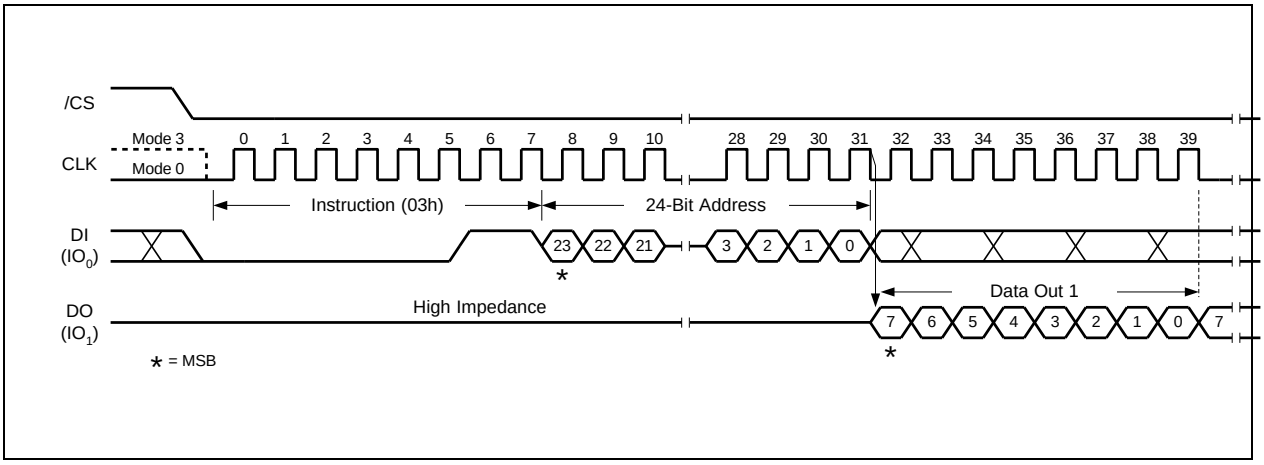

Figure 6.4.10. Read Data Instruction (SPI Mode only)

32-Bit Address is required when the device is operating in 4-Byte Address Mode

6.4.11 Read Data with 4-Byte Address (13h)

The Read Data with 4-Byte Address instruction is similar to the Read Data (03h) instruction. Instead of a 24-bit address, a 32-bit address is needed following the instruction code 13h. Whether the device is operating in 3-Byte Address Mode or 4-byte Address Mode, the Read Data with 4-Byte Address instruction will always require 32-bit address to access the entire 256M-bit ~2G-bit memory.

The Read Data with 4-Byte Address instruction sequence is shown below. If this instruction is issued while an Erase, Program or Write cycle is in process (BUSY=1), the instruction is ignored and will not have any effect on the current cycle. The Read Data with 4-Byte Address instruction allows clock rates from D.C. to a maximum of f_R (see AC Electrical Characteristics).

The Read Data with 4-Byte Address (13h) instruction is only supported in Standard SPI mode.

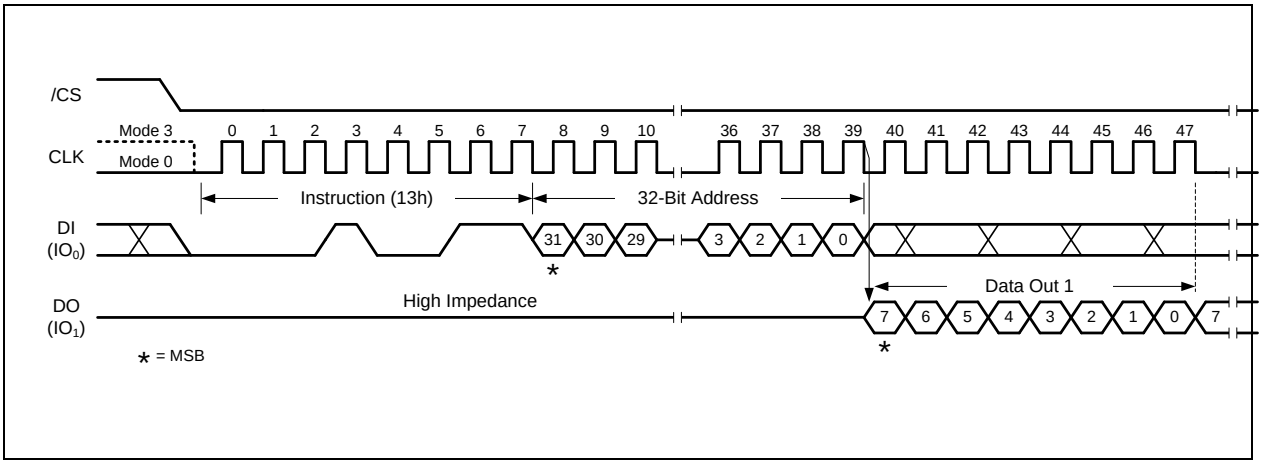

Figure 6.4.11. Read Data with 4-Byte Address Instruction (SPI Mode only)

6.4.12 Fast Read (0Bh)

The Fast Read instruction is similar to the Read Data instruction except that it can operate at the highest possible frequency of FR (see 7.5 AC Measurement Conditions). This is accomplished by adding eight "dummy" clocks after the 24/32-bit address as shown in Figure 6.4.12. The dummy clocks allow the devices internal circuits additional time for setting up the initial address. During the dummy clocks, the data value on the DO pin is a "don't care".

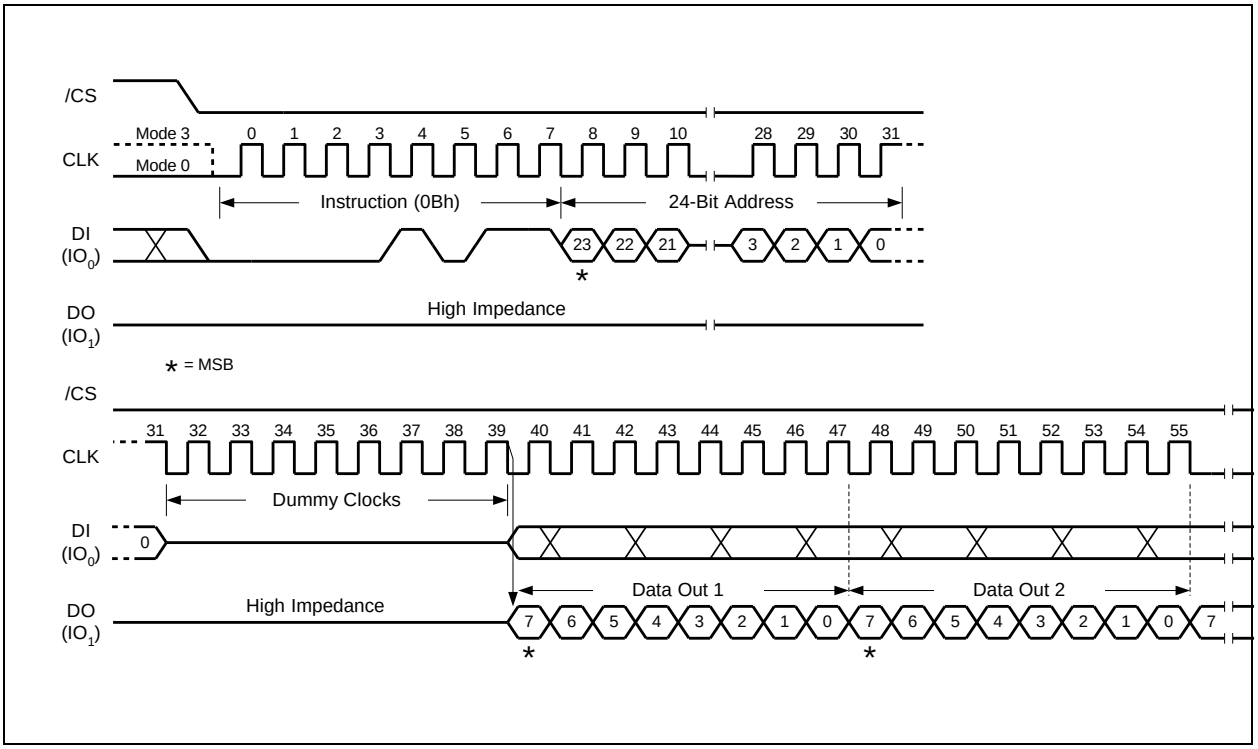

Figure 6.4.12a. Fast Read Instruction (SPI Mode)

32-Bit Address is required when the device is operating in 4-Byte Address Mode

Fast Read (0Bh) in QPI Mode

The Fast Read instruction is also supported in QPI mode. When QPI mode is enabled, the number of dummy clocks is configured by the “Set Read Parameters (C0h)” instruction to accommodate a wide range of applications with different needs for either maximum Fast Read frequency or minimum data access latency. Depending on the Read Parameter Bits P[6:4] setting, the number of dummy clocks can be configured as either 6, 8, 10, 12, 14 or 16. The default number of dummy clocks upon power up or after a Reset instruction is 6.

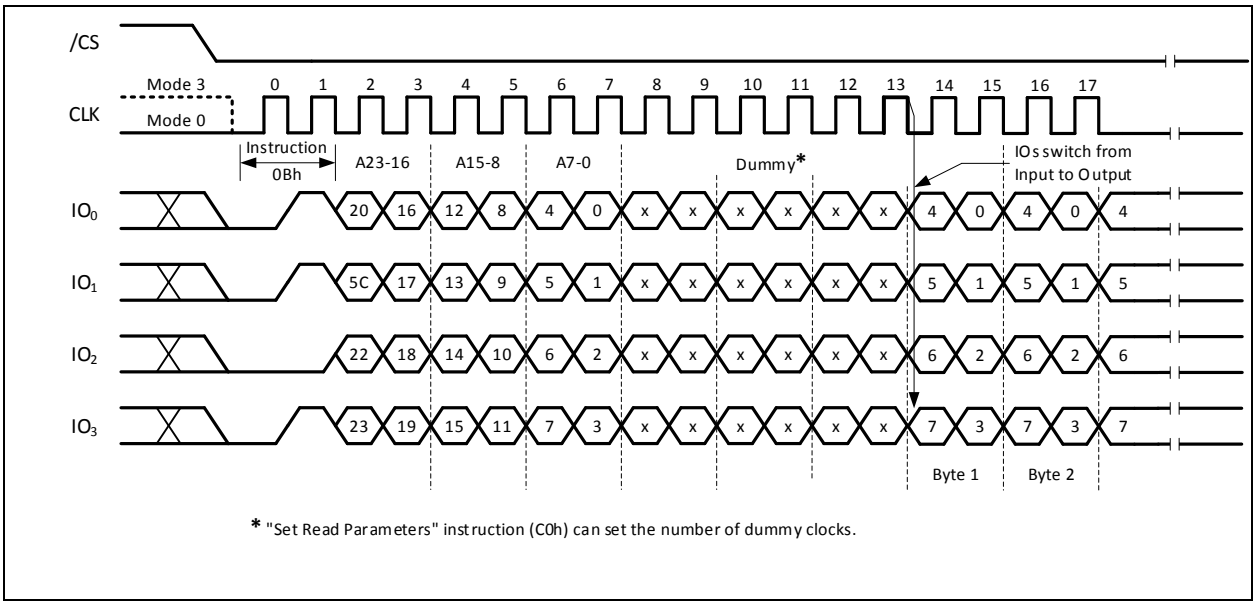

Figure 6.4.12b. Fast Read Instruction (QPI Mode)

32-Bit Address is required when the device is operating in 4-Byte Address Mode

6.4.13 DTR Fast Read (0Dh)

The DTR Fast Read instruction is similar to the Fast Read instruction except that the 24/32-bit address input and the data output require DTR (Double Transfer Rate) operation. This is accomplished by adding six “dummy” clocks after the 24/32-bit address as shown below. The dummy clocks allow the devices internal circuits additional time for setting up the initial address. During the dummy clocks, the data value on the DO pin is a “don’t care”.

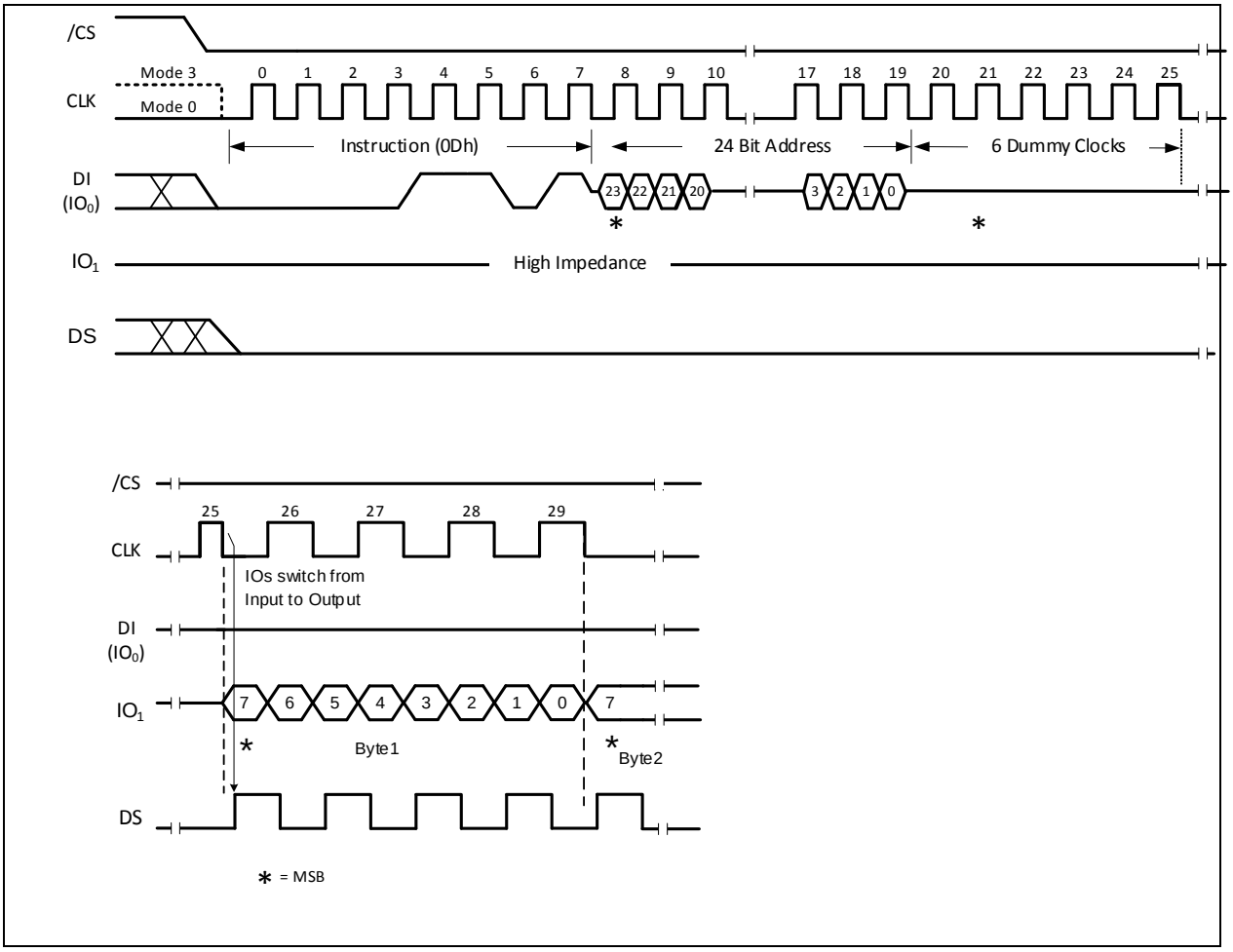

Figure 6.4.13a. DTR Fast Read Instruction (SPI Mode)

32-Bit Address is required when the device is operating in 4-Byte Address Mode

DTR Fast Read (0Dh) in QPI Mode

The DTR Fast Read instruction is also supported in QPI mode.

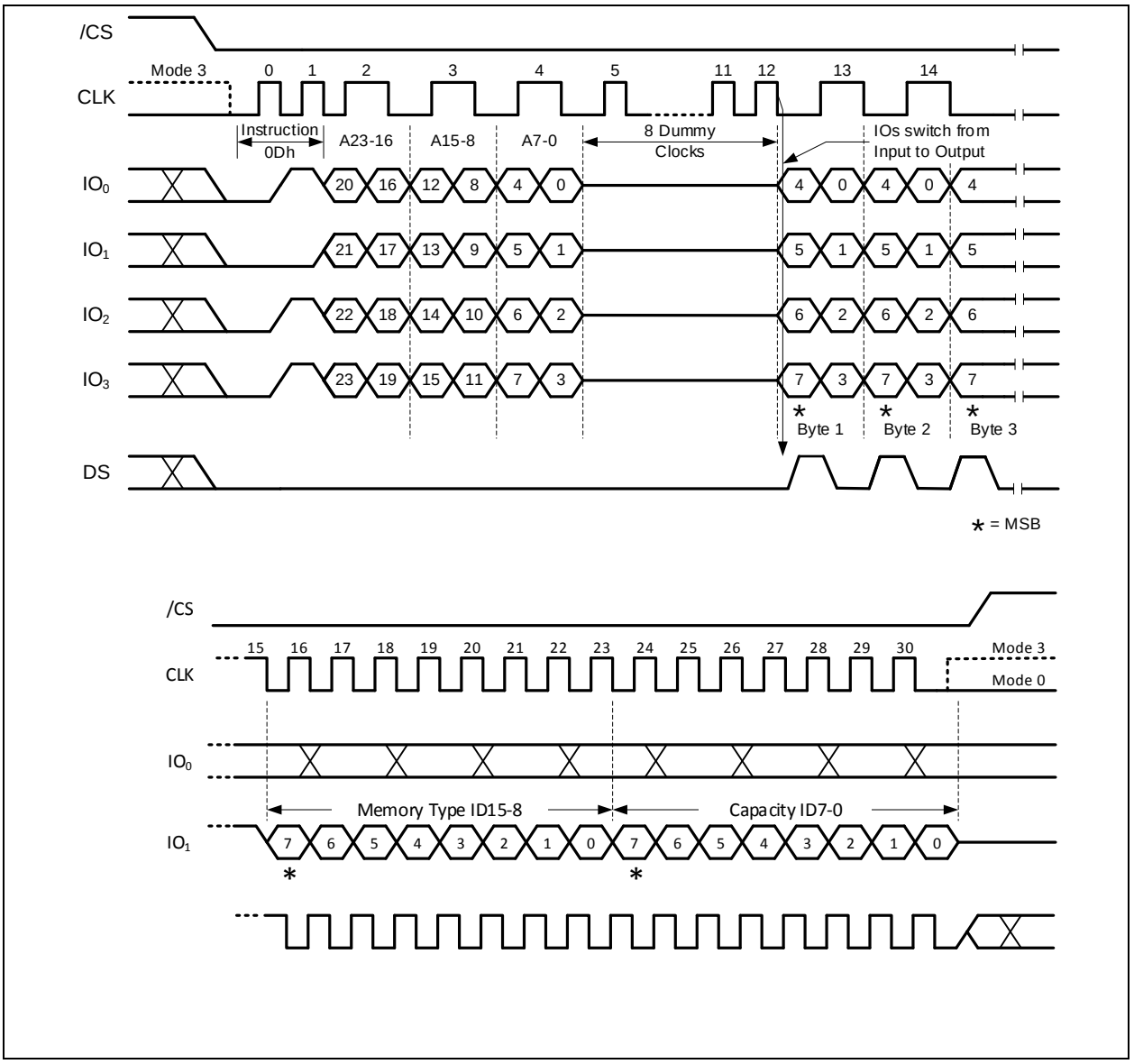

Figure 6.4.13b. DTR Fast Read Instruction (QPI Mode)

32-Bit Address is required when the device is operating in 4-Byte Address Mode

6.4.14 Fast Read with 4-Byte Address (0Ch)

The Fast Read with 4-Byte Address instruction is similar to the Fast Read instruction except that it requires a 32-bit address instead of a 24-bit address. Whether, the device is operating in 3-Byte Address Mode or 4-byte Address Mode, the Read Data with 4-Byte Address instruction will always require a 32-bit address to access the entire 256M-bit ~2G-bit memory.

The Fast Read with 4-Byte Address (0Ch) instruction is only supported in Standard SPI mode. In QPI mode, the instruction code 0Ch is used for the “Burst Read with Wrap” instruction.

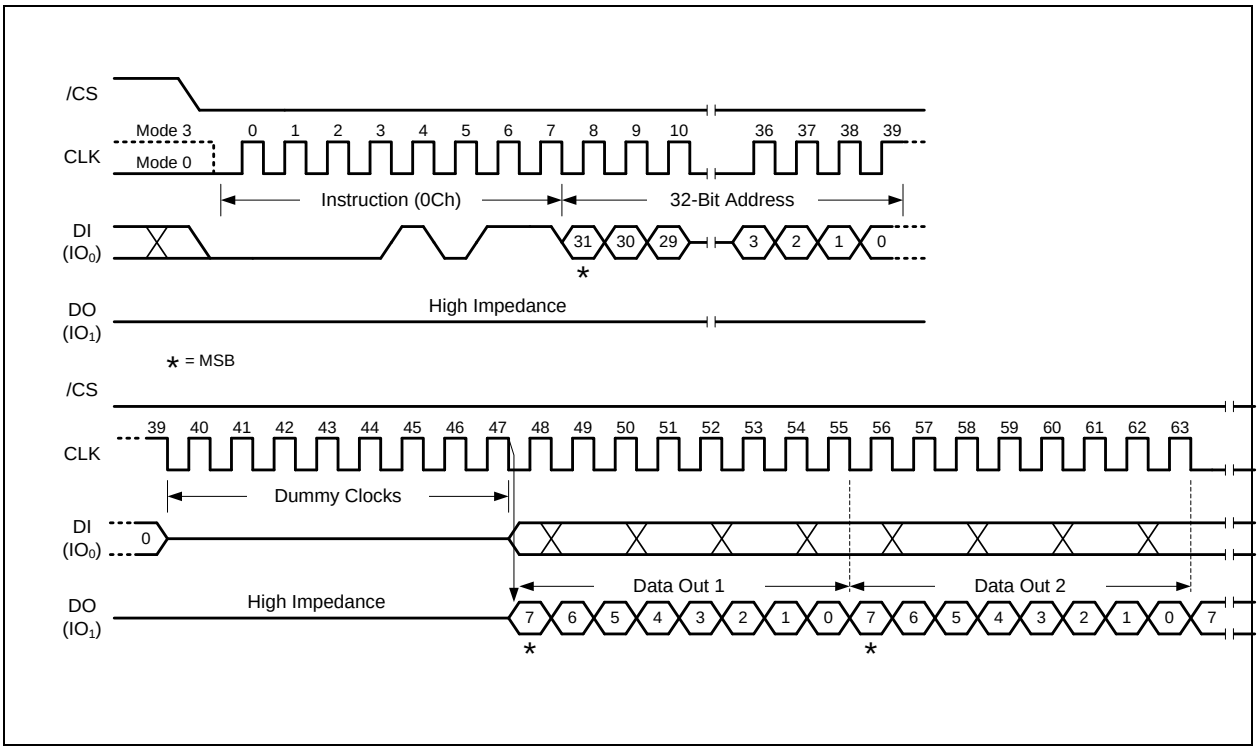

Figure 6.4.14. Fast Read with 4-Byte Address Instruction (SPI Mode only)

6.4.15 Fast Read Dual Output (3Bh)

The Fast Read Dual Output (3Bh) instruction is similar to the standard Fast Read (0Bh) instruction except that data is output on two pins; IO_0 and IO_1. This allows data to be transferred at twice the rate of standard SPI devices. The Fast Read Dual Output instruction is ideal for quickly downloading code from Flash to RAM upon power-up or for applications that cache code-segments to RAM for execution.

Similar to the Fast Read instruction, the Fast Read Dual Output instruction can operate at the highest possible frequency of F_R (see AC Electrical Characteristics). This is accomplished by adding eight "dummy" clocks after the 24/32-bit address as shown in below. The dummy clocks allow the device's internal circuits additional time for setting up the initial address. The input data during the dummy clocks is "don't care". However, the IO_0 pin should be high-impedance prior to the falling edge of the first data out clock.

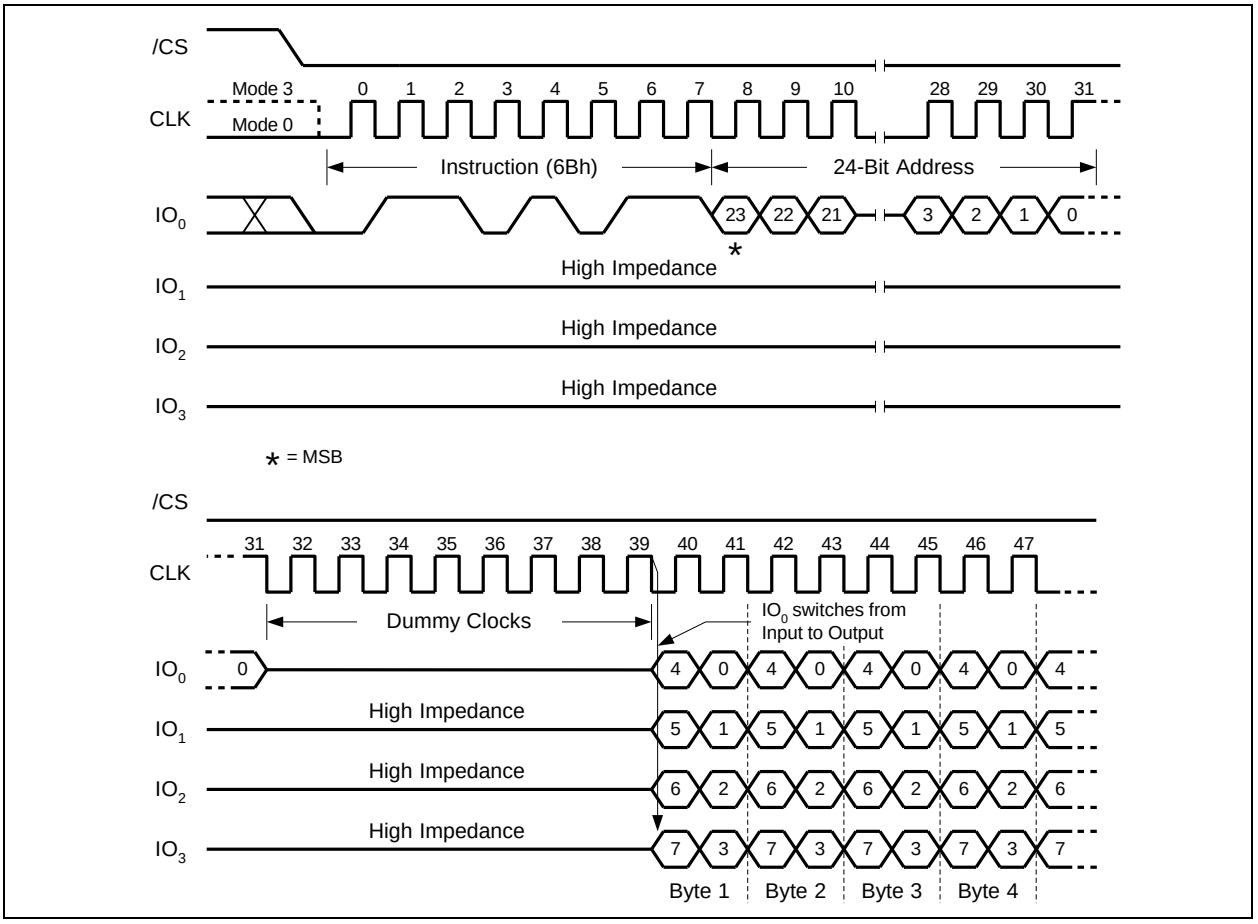

Figure 6.4.15. Fast Read Dual Output Instruction (SPI Mode only)

32-Bit Address is required when the device is operating in 4-Byte Address Mode

6.4.16 Fast Read Dual Output with 4-Byte Address (3Ch)

The Fast Read Dual Output with 4-Byte Address instruction is similar to the Fast Read Dual Output instruction except that it requires a 32-bit address instead of a 24-bit address. Whether, the device is operating in a 3-Byte Address Mode or a 4-byte Address Mode, the Fast Read Dual Output with 4-Byte Address instruction will always require a 32-bit address to access the entire 256M-bit ~2G-bit memory.

The Fast Read Dual Output with 4-Byte Address (3Ch) instruction is only supported in Standard SPI mode.

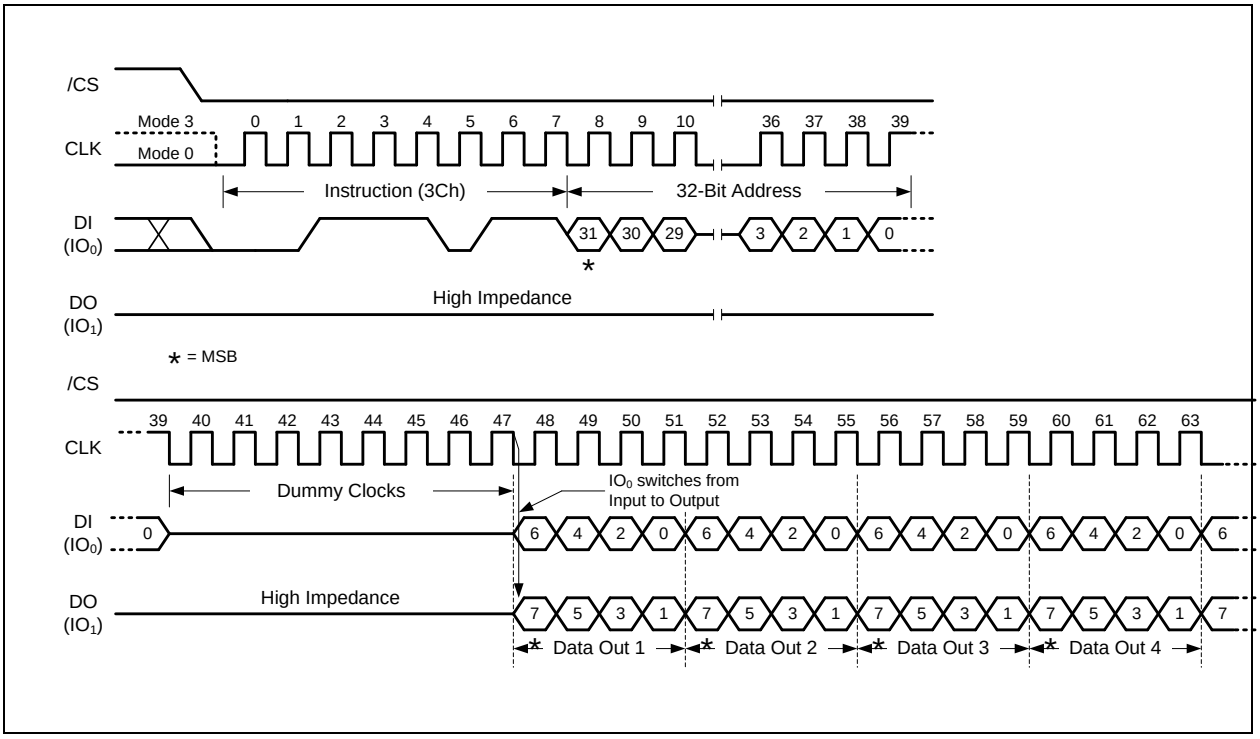

Figure 6.2.16. Fast Read Dual Output with 4-Byte Address Instruction (SPI Mode only)

6.4.17 Fast Read Quad Output (6Bh)

The Fast Read Quad Output (6Bh) instruction is similar to the Fast Read Dual Output (3Bh) instruction except that data is output on four pins, IO_0, IO_1, IO_2, and IO_3. The Quad Enable (QE) bit in Status Register-2 must be set to 1 before the device will accept the Fast Read Quad Output Instruction. The Fast Read Quad Output Instruction allows data to be transferred at four times the rate of standard SPI devices.

The Fast Read Quad Output instruction can operate at the highest possible frequency of F_R (see AC Electrical Characteristics). This is accomplished by adding eight "dummy" clocks after the 24/32-bit address as shown in Figure 6.4.17. The dummy clocks allow the device's internal circuits additional time for setting up the initial address. The input data during the dummy clocks is "don't care". However, the IO pins should be high-impedance prior to the falling edge of the first data out clock.

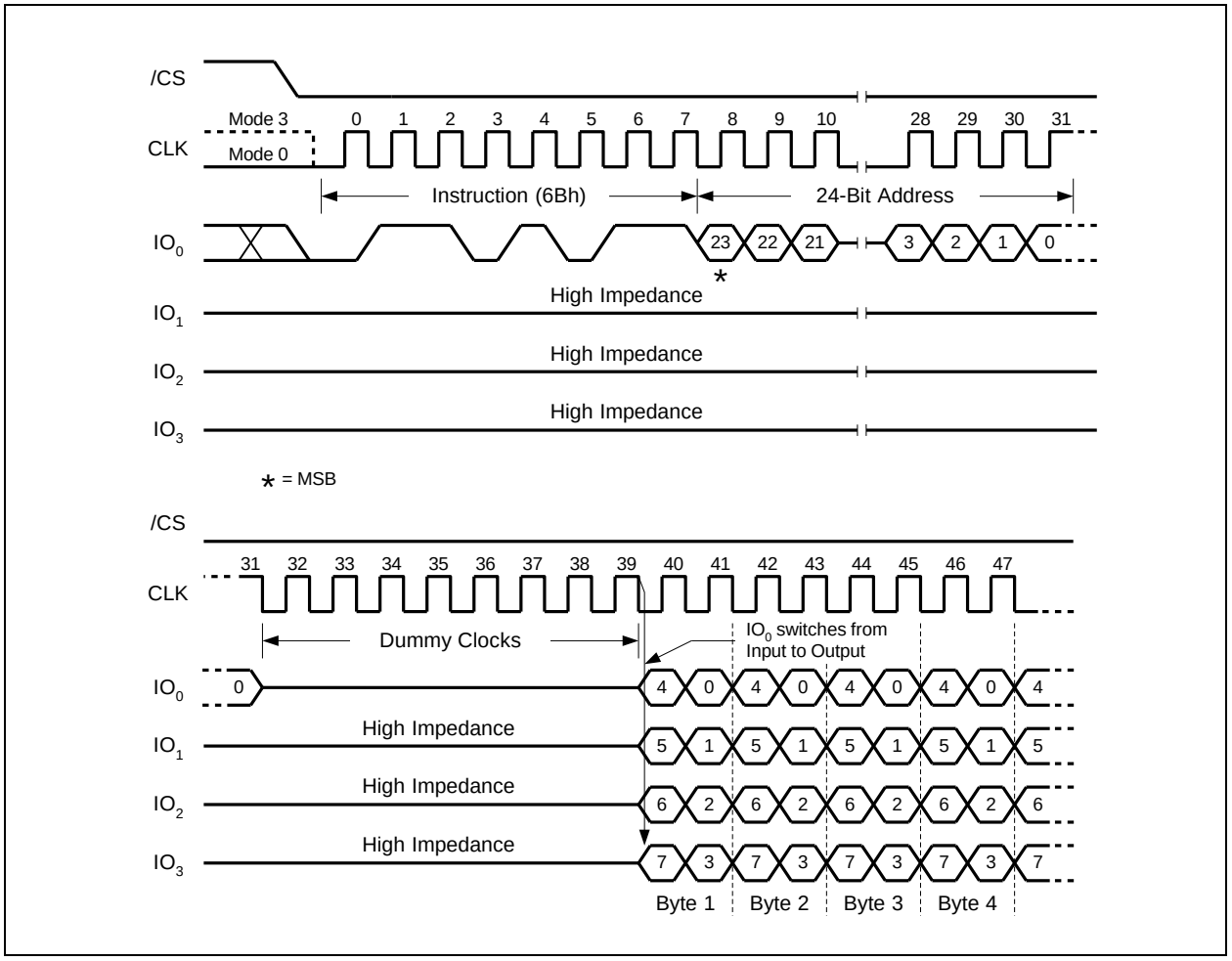

Figure 6.4.17. Fast Read Quad Output Instruction (SPI Mode only)

32-Bit Address is required when the device is operating in 4-Byte Address Mode

6.4.18 Fast Read Quad Output with 4-Byte Address (6Ch)

The Fast Read Quad Output with 4-Byte Address instruction is similar to the Fast Read Quad Output instruction except that it requires a 32-bit address instead of a 24-bit address. Whether the device is operating in 3-Byte Address Mode or 4-byte Address Mode, the Fast Read Quad Output with 4-Byte Address instruction will always require a 32-bit address to access the entire 256M-bit ~2G-bit memory.

The Fast Read Quad Output with 4-Byte Address (6Ch) instruction is only supported in Standard SPI mode.

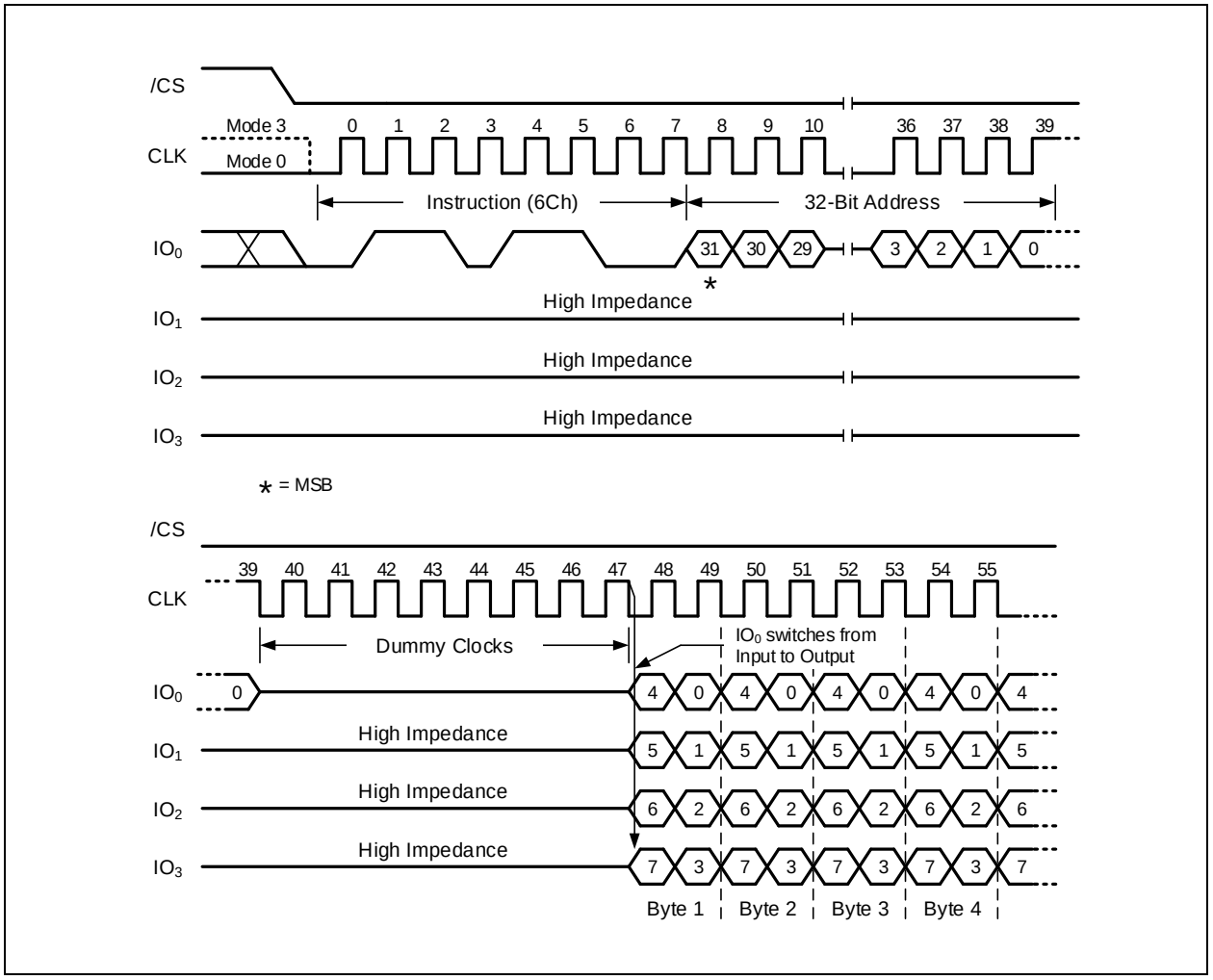

Figure 6.4.18. Fast Read Quad Output with 4-Byte Address Instruction (SPI Mode only)

6.4.19 Fast Read Dual I/O (BBh)

The Fast Read Dual I/O (BBh) instruction allows for improved random access while maintaining two IO pins, IO_0 and IO_1. It is similar to the Fast Read Dual Output (3Bh) instruction but with the capability to input the Address bits (A23/A31-0) two bits per clock. This reduced instruction overhead may allow for code execution (XIP) directly from the Dual SPI in some applications.

Similar to the Fast Read Dual Output (3Bh) instruction, the Fast Read Dual I/O instruction can operate at the highest possible frequency of F_R (see AC Electrical Characteristics). This is accomplished by adding four "dummy" clocks after the 24/32-bit address as shown in Figure 6.2.19a. The dummy clocks allow the device's internal circuits additional time for setting up the initial address. The input data during the dummy clocks is "don't care". However, the IO_0 pin should be high-impedance prior to the falling edge of the first data out clock.

Fast Read Dual I/O with "Read Command Bypass Mode"

The Fast Read Dual I/O instruction can further reduce instruction overhead through setting the Read Command Bypass Mode bits (M7-0) after the input Address bits (A23-0), as shown in Figure 6.2.19b. The upper nibble (M7-4) controls the length of the next Fast Read Dual I/O instruction through the inclusion or exclusion of the first byte instruction code. The lower nibble bits (M3-0) are don't care ("x"). However, the IO pins should be high-impedance prior to the falling edge of the first data out clock.

If the Read Command Bypass Mode bits M5-4 = (1,0), then the next Fast Read Dual I/O instruction (after /CS is raised and then lowered) does not require the BBh instruction code, as shown in Figure 6.4.19. This reduces the instruction sequence by eight clocks and allows the Read address to be immediately entered after /CS is asserted low. If the Read Command Bypass Mode bits M5-4 do not equal (1,0), the next instruction (after /CS is raised and then lowered) requires the first byte instruction code, thus returning to normal operation. It is recommended to input FFFFh on IO0 for the next instruction (16 clocks), to ensure M4 = 1 and return the device to normal operation.

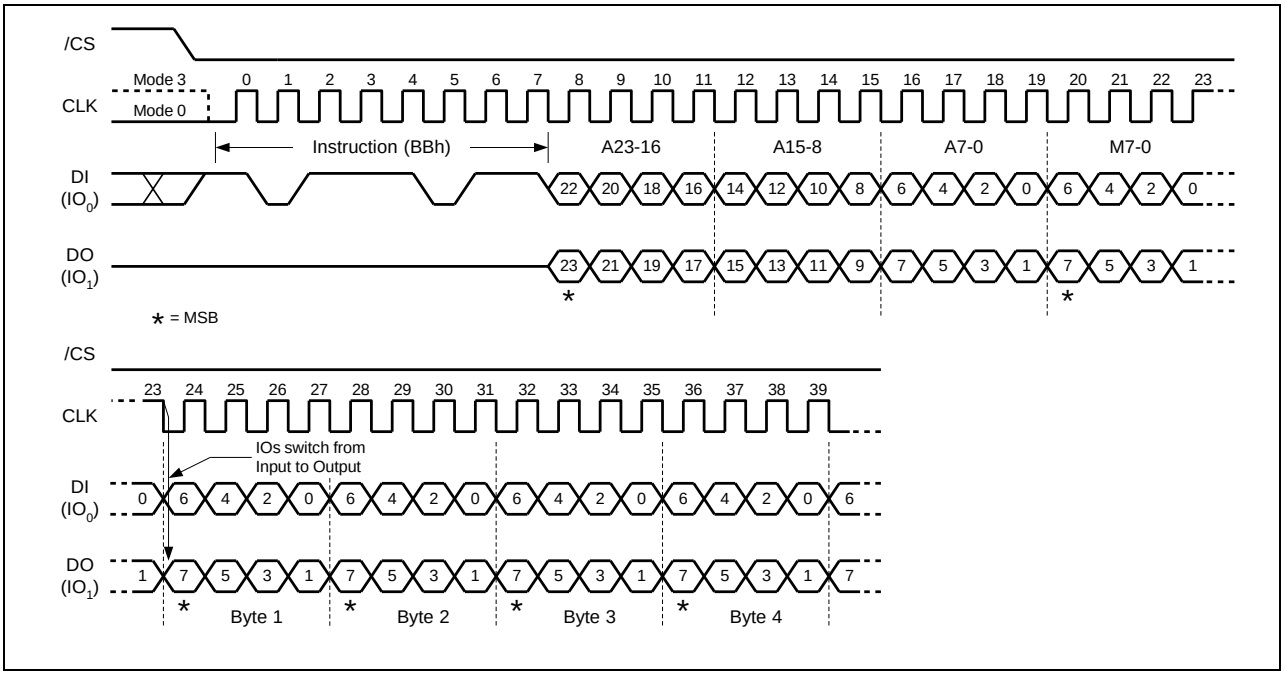

Figure 6.4.19a. Fast Read Dual I/O (Initial instruction or previous M5-4¹10, SPI Mode only)

32-Bit Address is required when the device is operating in 4-Byte Address Mode

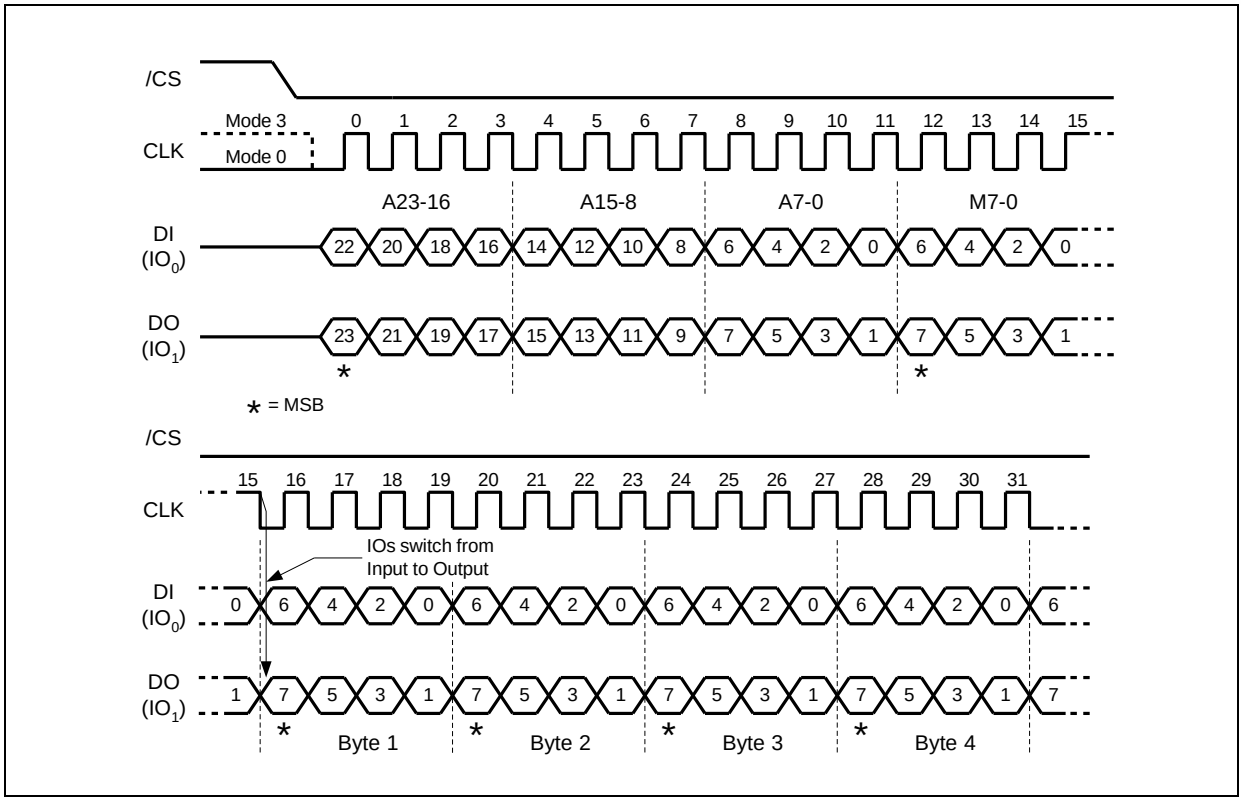

Figure 6.4.19b. Fast Read Dual I/O (Previous instruction set M5-4=10, SPI Mode only)

32-Bit Address is required when the device is operating in 4-Byte Address Mode

6.4.20 DTR Fast Read Dual I/O (BDh)

The DTR Fast Read Dual I/O (BDh) instruction allows for improved random access while maintaining two IO pins, IO_0 and IO_1. It is similar to the Fast Read Dual Output (3Bh) instruction but with the capability to input the Address bits (A23/A31-0) two bits per clock. This reduced instruction overhead may allow for code execution (XIP) directly from the Dual SPI in some applications.

DTR Fast Read Dual I/O with (Read Command Bypass Mode)

The DTR Fast Read Dual I/O instruction can further reduce instruction overhead through setting the Read Command Bypass Mode bits (M7-0) after the input Address bits (A23-0), as shown in Figure 6.2.20a. The upper nibble (M7-4) controls the length of the next Fast Read Dual I/O instruction through the inclusion or exclusion of the first byte instruction code. The lower nibble bits (M3-0) are don't care ("x"). However, the IO pins should be high-impedance prior to the falling edge of the first data out clock.

If the Read Command Bypass Mode bits M5-4 = (1,0), then the next Fast Read Dual I/O instruction (after /CS is raised and then lowered) does not require the BBh instruction code, as shown in Figure 6.2.20b. This reduces the instruction sequence by eight clocks and allows the Read address to be immediately entered after /CS is asserted low. If the Read Command Bypass Mode bits M5-4 do not equal (1,0), the next instruction (after /CS is raised and then lowered) requires the first byte instruction code, thus returning to normal operation. It is recommended to input FFFFh/FFFFFh on IO0 for the next instruction (16/20 clocks), to ensure M4 = 1 and return the device to normal operation.

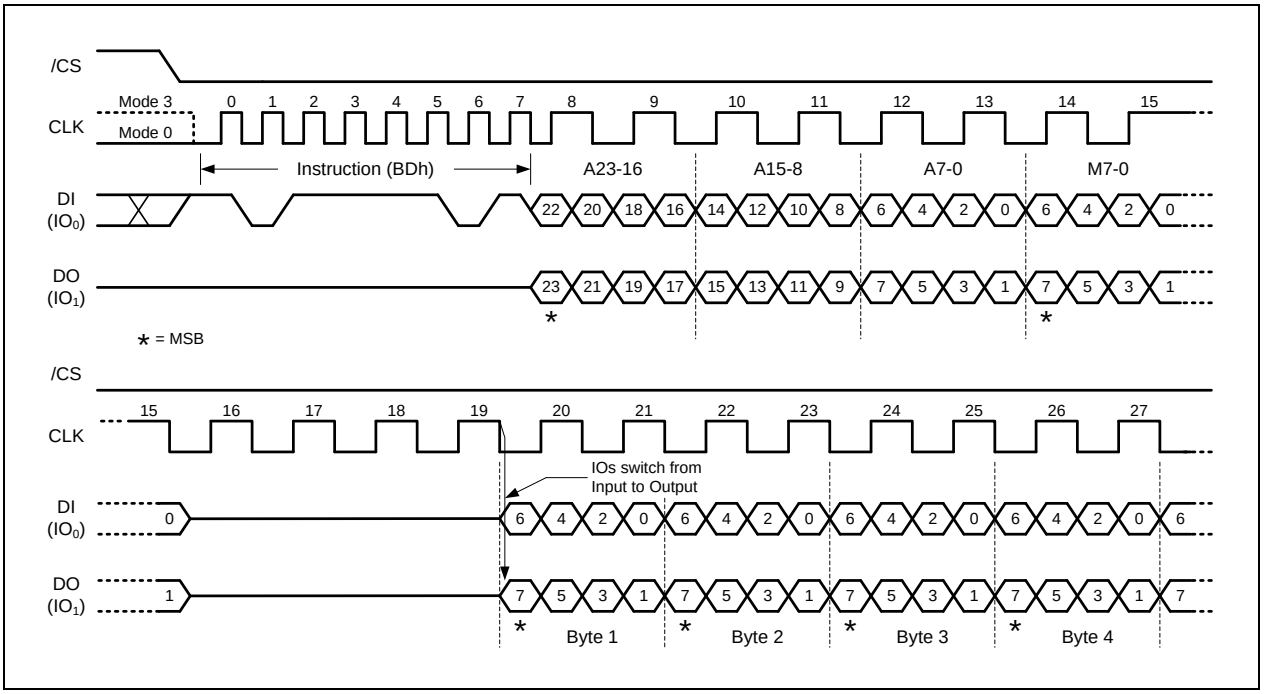

Figure 6.4.20a. DTR Fast Read Dual I/O (Initial instruction or previous M5-4¹10, SPI Mode only)

32-Bit Address is required when the device is operating in 4-Byte Address Mode

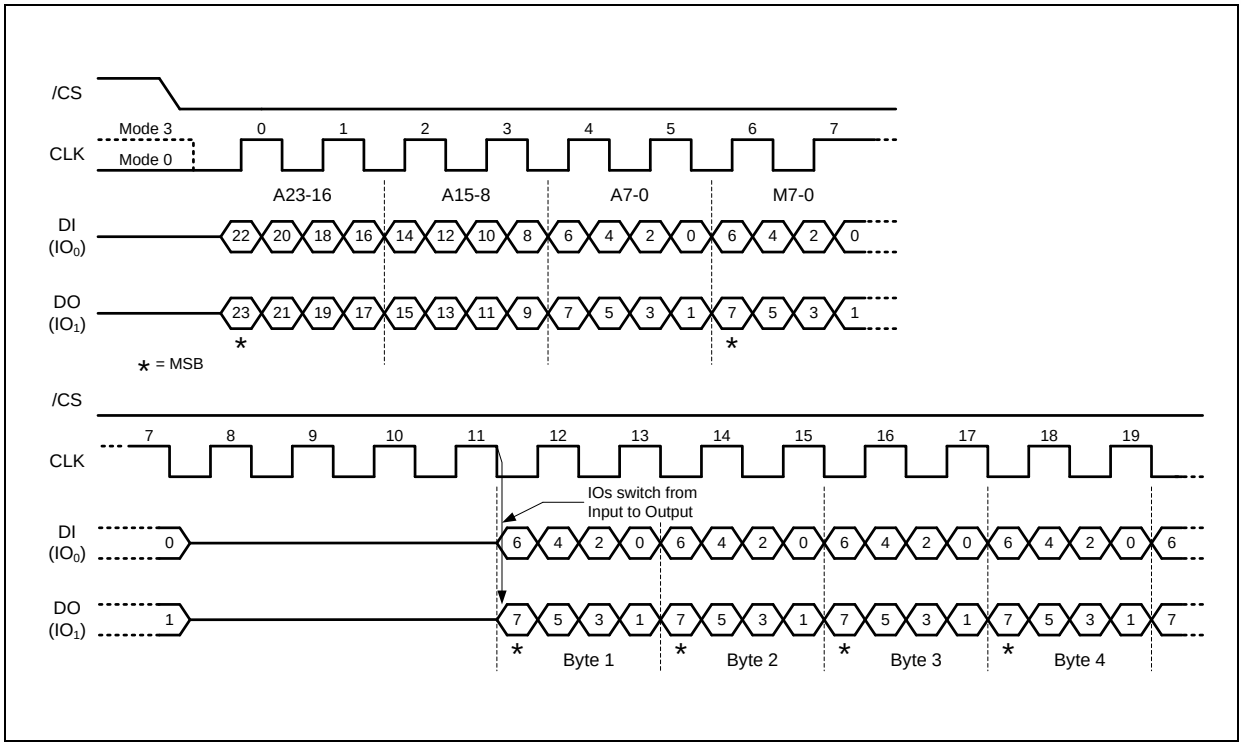

Figure 6.4.20b. DTR Fast Read Dual I/O (Previous instruction set M5-4=10, SPI Mode only)

6.4.21 Fast Read Dual I/O with 4-Byte Address (BCh)

The Fast Read Dual I/O with 4-Byte Address instruction is similar to the Fast Read Dual I/O instruction except that it requires a 32-bit address instead of a 24-bit address. Whether the device is operating in a 3-Byte Address Mode or a 4-byte Address Mode, the Fast Read Dual I/O with 4-Byte Address instruction will always require a 32-bit address to access the entire 256M-bit ~2G-bit memory.

The Fast Read Dual I/O with 4-Byte Address (BCh) instruction is only supported in Standard SPI mode.

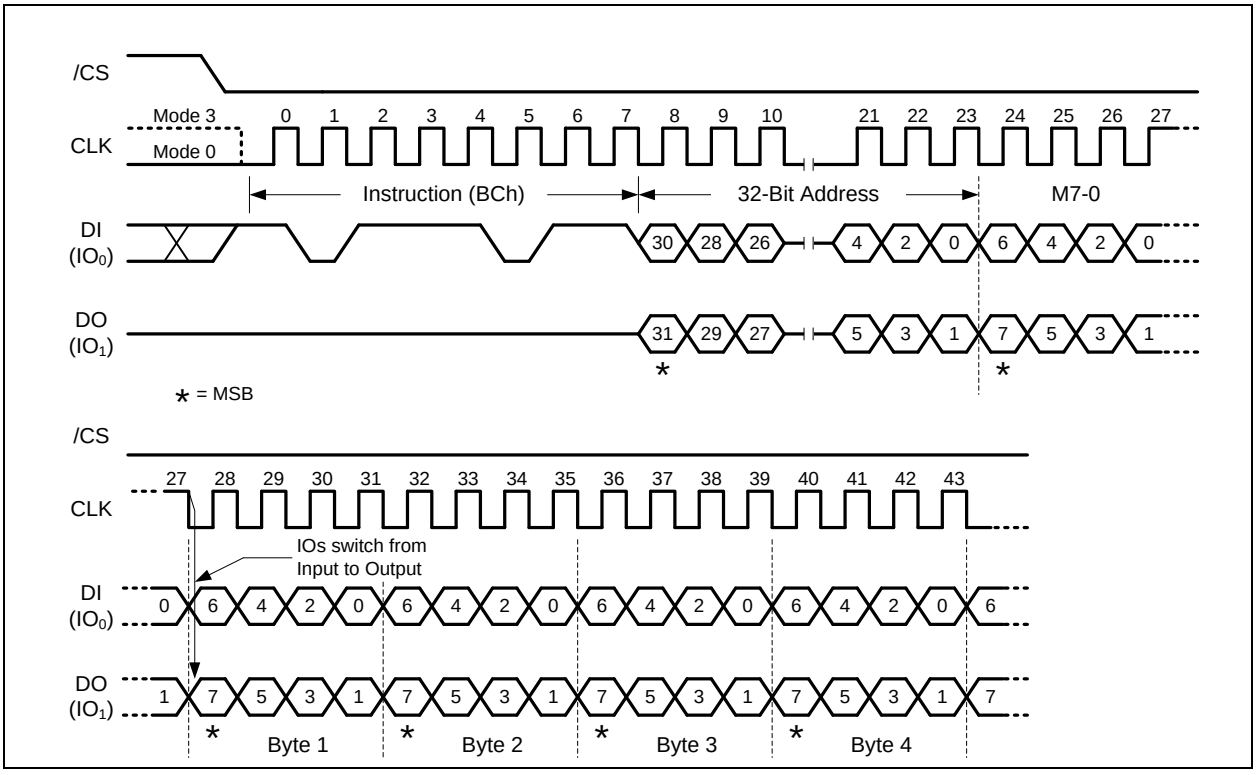

Figure 6.4.21a. Fast Read Dual I/O w/ 4-Byte Addr. (Initial instruction or previous M5-4¹10, SPI Mode only)

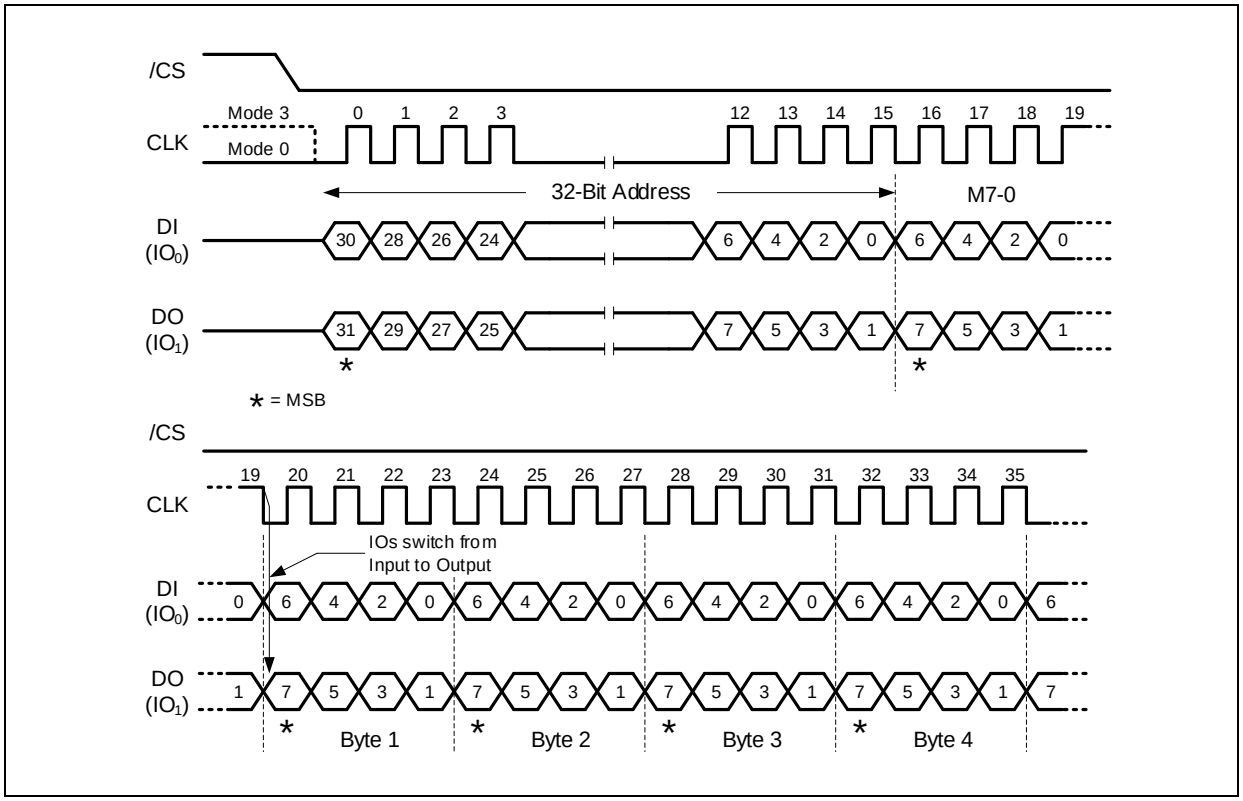

Figure 6.4.21b. Fast Read Dual I/O w/ 4-Byte Addr. (Previous instruction set M5-4=10, SPI Mode only)

6.4.22 Fast Read Quad I/O (EBh)

The Fast Read Quad I/O (EBh) instruction is similar to the Fast Read Dual I/O (BBh) instruction except that the address and data bits are input and output through four pins IO_0, IO_1, IO_2 and IO_3 and four Dummy clocks are required in SPI mode prior to the data output. The Quad I/O dramatically reduces instruction overhead allowing faster random access for code execution (XIP) directly from the Quad SPI. The Quad Enable bit (QE) of Status Register-2 must be set to enable the Fast Read Quad I/O Instruction.

Fast Read Quad I/O with "Read Command Bypass Mode"

The Fast Read Quad I/O instruction can further reduce instruction overhead through setting the Read Command Bypass Mode bits (M7-0) after the input Address bits (A23-0), as shown in Figure 6.2.22a. The upper nibble (M7-4) controls the length of the next Fast Read Quad I/O instruction through the inclusion or exclusion of the first byte instruction code. The lower nibble bits (M3-0) are don't care ("x"). However, the IO pins should be high-impedance prior to the falling edge of the first data out clock.

If the Read Command Bypass Mode bits M5-4 = (1,0), then the next Fast Read Quad I/O instruction (after /CS is raised and then lowered) does not require the EBh instruction code, as shown in Figure 6.2.22b. This reduces the instruction sequence by eight clocks and allows the Read address to be immediately entered after /CS is asserted low. If the Read Command Bypass Mode bits M5-4 do not equal to (1,0), the next instruction (after /CS is raised and then lowered) requires the first byte instruction code, thus returning to normal operation. It is recommended to input FFh on IO0 for the next instruction (8 clocks), to ensure M4 = 1 and return the device to normal operation.

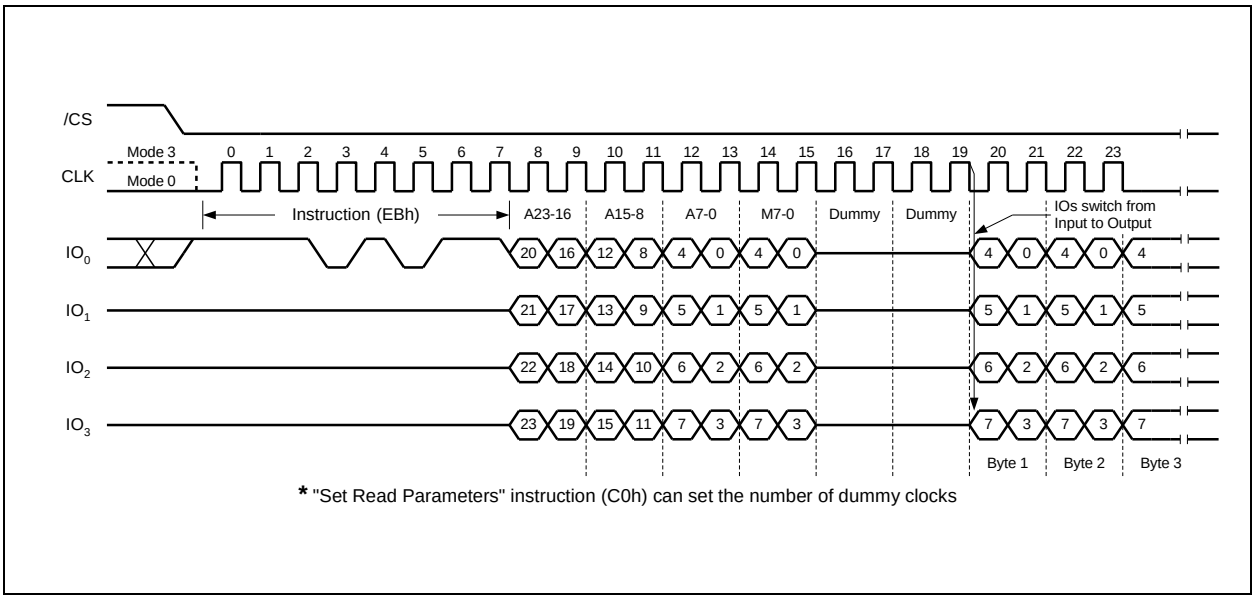

Figure 6.4.22a. Fast Read Quad I/O (Initial instruction or previous M5-4¹10, SPI Mode)

32-Bit Address is required when the device is operating in 4-Byte Address Mode

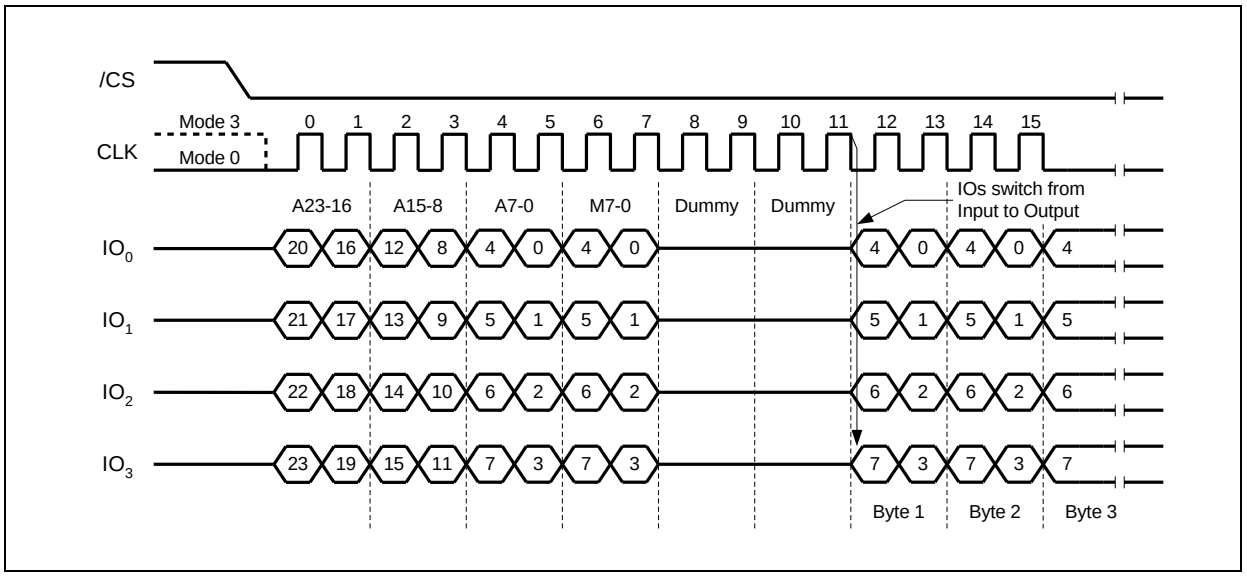

Figure 6.4.22b. Fast Read Quad I/O Instruction (Previous instruction set M5-4 = 10, SPI Mode)

Fast Read Quad I/O with "8/16/32/64-Byte Wrap Around" in Standard SPI mode

The Fast Read Quad I/O instruction can also be used to access a specific portion within a page by issuing a "Set Burst with Wrap" (77h) command prior to EBh. The "Set Burst with Wrap" (77h) command can either enable or disable the "Wrap Around" feature for the following EBh commands. When "Wrap Around" is enabled, the data being accessed can be limited to either an 8, 16, 32 or 64-byte section of a 256-byte page. The output data starts at the initial address specified in the instruction. Once it reaches the ending boundary of the 8/16/32/64-byte section, the output will wrap around to the beginning boundary automatically until /CS is pulled high to terminate the command.

The Burst with Wrap feature allows applications that use cache to quickly fetch a critical address and then fill the cache afterwards within a fixed length (8/16/32/64-byte) of data without issuing multiple read commands.

The "Set Burst with Wrap" instruction allows three "Wrap Bits", W6-4 to be set. The W4 bit is used to enable or disable the "Wrap Around" operation while bits W6-5 are used to specify the length of the wrap around section within a page. Refer to the link " 6.4.26 Set Burst with Wrap (77h)"

Fast Read Quad I/O (EBh) in QPI Mode

The Fast Read Quad I/O instruction is also supported in QPI mode, as shown in Figure 26c. When QPI mode is enabled, the number of dummy clocks is configured by the "Set Read Parameters (C0h)" instruction to accommodate a wide range of applications with different needs for either maximum Fast Read frequency or minimum data access latency. Depending on the Read Parameter Bits P[5:4] setting, the number of dummy clocks can be configured as either 6, 8, 10, 12, 14 or 16. The default number of dummy clocks upon power up or after a Reset instruction is 6.

The "Wrap Around" feature is not available in QPI mode for Fast Read Quad I/O instruction. To perform a read operation with fixed data length, wrap around in QPI mode, a dedicated "Burst Read with Wrap" (0Ch) instruction must be used. Please refer to the link " 6.4.14 Fast Read with 4-Byte Address (0Ch) "for details.

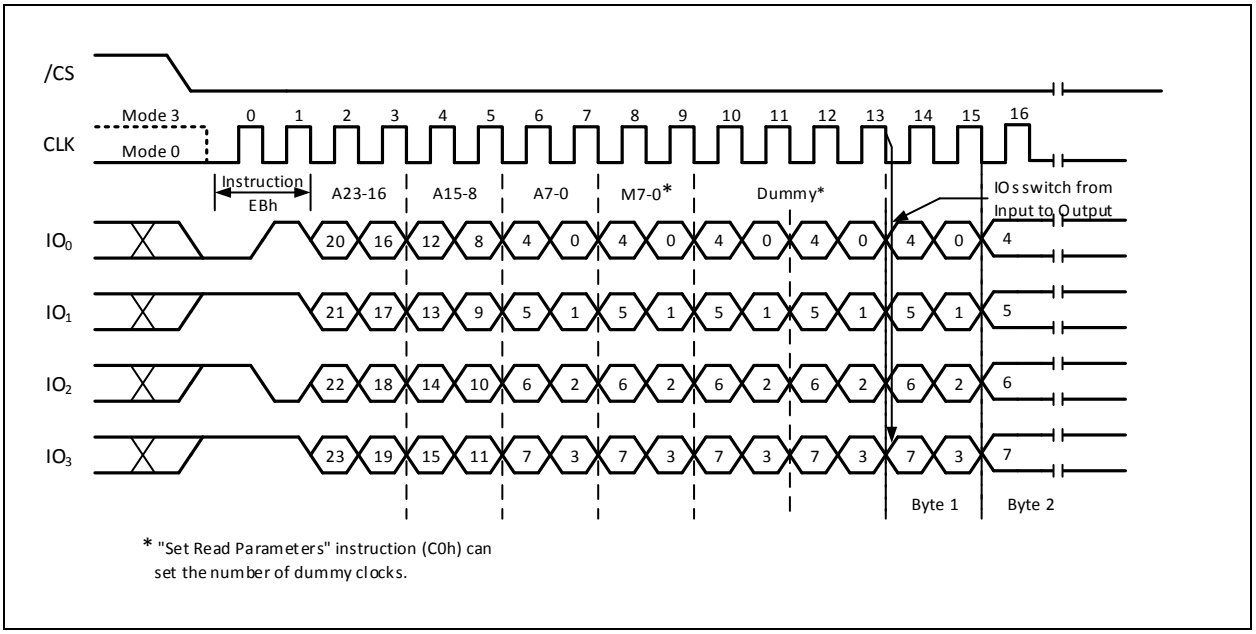

Figure **Error! Reference source not found.**c. Fast Read Quad I/O (Initial instruction or previous M5-4≠10, QPI Mode)

32-Bit Address is required when the device is operating in 4-Byte Address Mode

6.4.23 DTR Fast Read Quad I/O (EDh)

The DTR Fast Read Quad I/O (EDh) instruction is similar to the Fast Read Dual I/O (BBh) instruction except that address and data bits are input and output through four pins IO_0, IO_1, IO_2 and IO_3 and four Dummy clocks are required in SPI mode prior to the data output. The Quad I/O dramatically reduces instruction overhead allowing faster random access for code execution (XIP) directly from the Quad SPI. The Quad Enable bit (QE) of Status Register-2 must be set to enable the Fast Read Quad I/O Instruction.

DTR Fast Read Quad I/O with "Read Command Bypass Mode"

The Fast Read Quad I/O instruction can further reduce instruction overhead through setting the Read Command Bypass Mode bits (M7-0) after the input Address bits (A23/A31-0), as shown in Figure 6.2.23a. The upper nibble (M7-4) controls the length of the next Fast Read Quad I/O instruction through the inclusion or exclusion of the first byte instruction code. The lower nibble bits (M3-0) are don't care ("x"). However, the IO pins should be high impedance prior to the falling edge of the first data out clock.

If the Read Command Bypass Mode bits M5-4 = (1,0), then the next Fast Read Quad I/O instruction (after /CS is raised and then lowered) does not require the EBh instruction code, as shown in Figure 6.2.23b. This reduces the instruction sequence by eight clocks and allows the Read address to be immediately entered after /CS is asserted low. If the Read Command Bypass Mode bits M5-4 do not equal to (1,0), the next instruction (after /CS is raised and then lowered) requires the first byte instruction code, thus returning to normal operation. It is recommended to input FFh/3FFh on IO0 for the next instruction (8/10 clocks), to ensure M4 = 1 and return the device to normal operation.

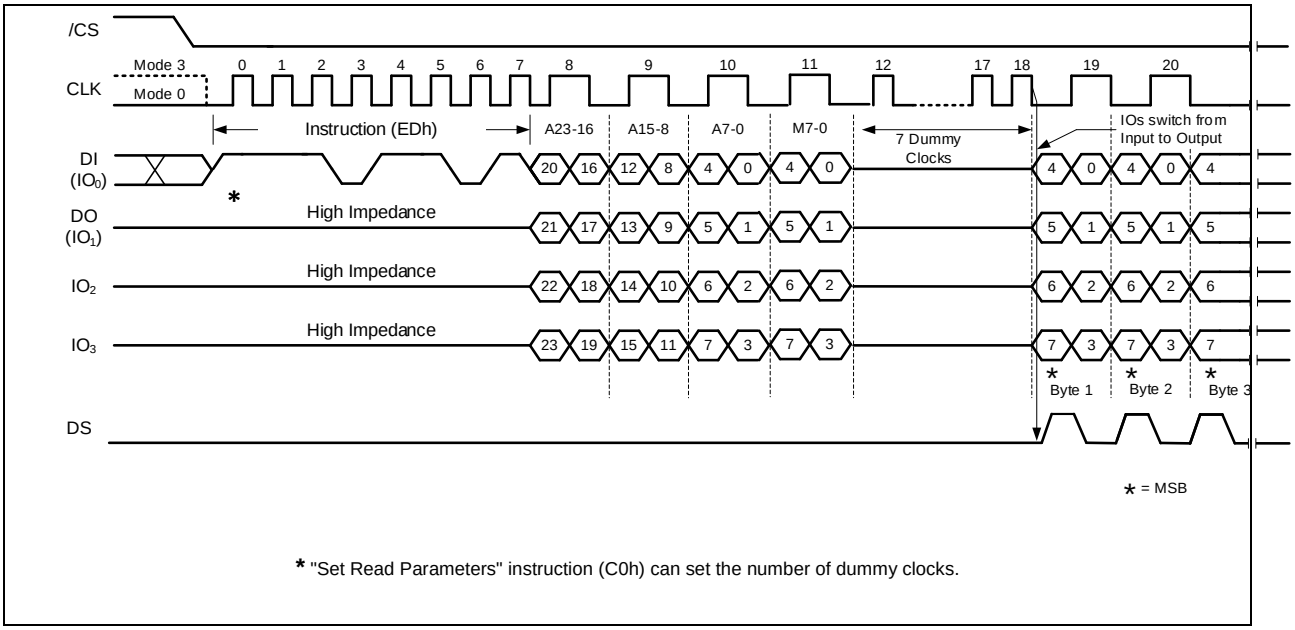

Figure 6.4.23a. DTR Fast Read Quad I/O (Initial instruction or previous M5-4¹10, SPI Mode)

32-Bit Address is required when the device is operating in 4-Byte Address Mode

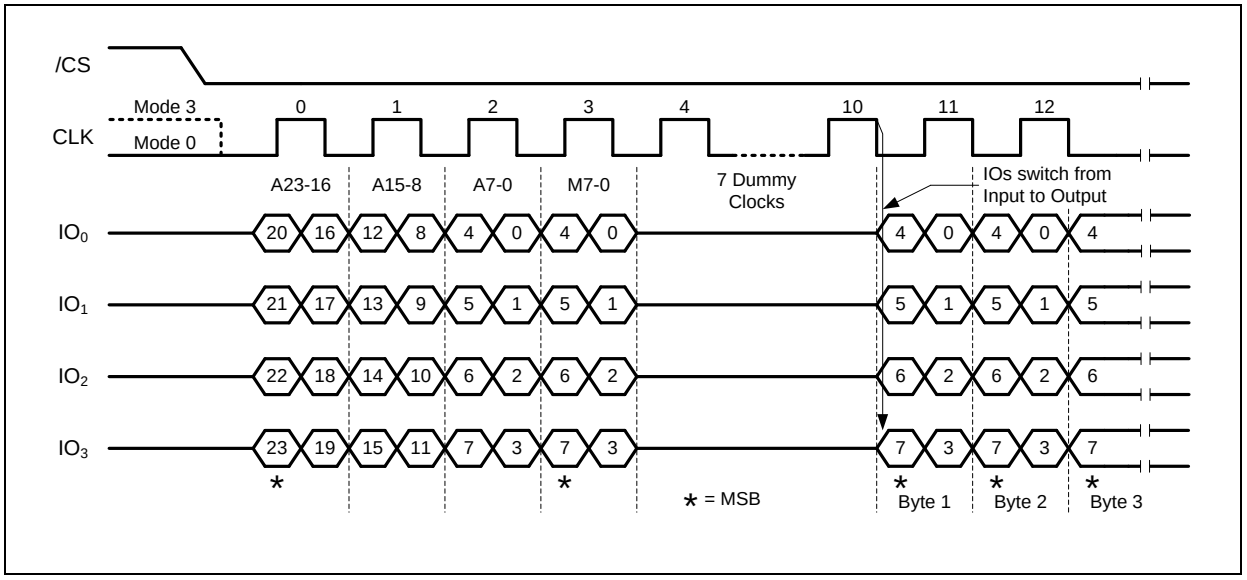

Figure 6.4.23b. Fast Read Quad I/O (Previous instruction set M5-4=10, SPI Mode)

32-Bit Address is required when the device is operating in 4-Byte Address Mode

DTR Fast Read Quad I/O with "8/16/32/64-Byte Wrap Around" in Standard SPI mode

The Fast Read Quad I/O instruction can also be used to access a specific portion within a page by issuing a "Set Burst with Wrap" (77h) command prior to EDh. The "Set Burst with Wrap" (77h) command can either enable or disable the "Wrap Around" feature for the following EDh commands. When "Wrap Around" is enabled, the data being accessed can be limited to either an 8, 16, 32 or 64-byte section of a 256-byte page. The output data starts at the initial address specified in the instruction. Once it reaches the ending boundary of the 8/16/32/64-byte section, the output will wrap around to the beginning boundary automatically until /CS is pulled high to terminate the command.

The Burst with Wrap feature allows applications that use cache to quickly fetch a critical address and then fill the cache afterwards within a fixed length (8/16/32/64-byte) of data without issuing multiple read commands.

The "Set Burst with Wrap" instruction allows three "Wrap Bits", W6-4 to be set. The W4 bit is used to enable or disable the "Wrap Around" operation while bits W6-5 are used to specify the length of the wrap around section within a page. Refer to the link " 6.4.26 Set Burst with Wrap (77h)

DTR Fast Read Quad I/O (EDh) in QPI Mode

The DTR Fast Read Quad I/O instruction is also supported in QPI mode, as shown in Figure 6.2.23c The "Wrap Around" feature is not available in QPI mode for Fast Read Quad I/O instruction. To perform a read operation with fixed data length wrap around in QPI mode, a dedicated "Burst Read with Wrap" (0Ch) instruction must be used. Please refer to the link "6.4.51 Burst Read with Wrap (0Ch)" for details.

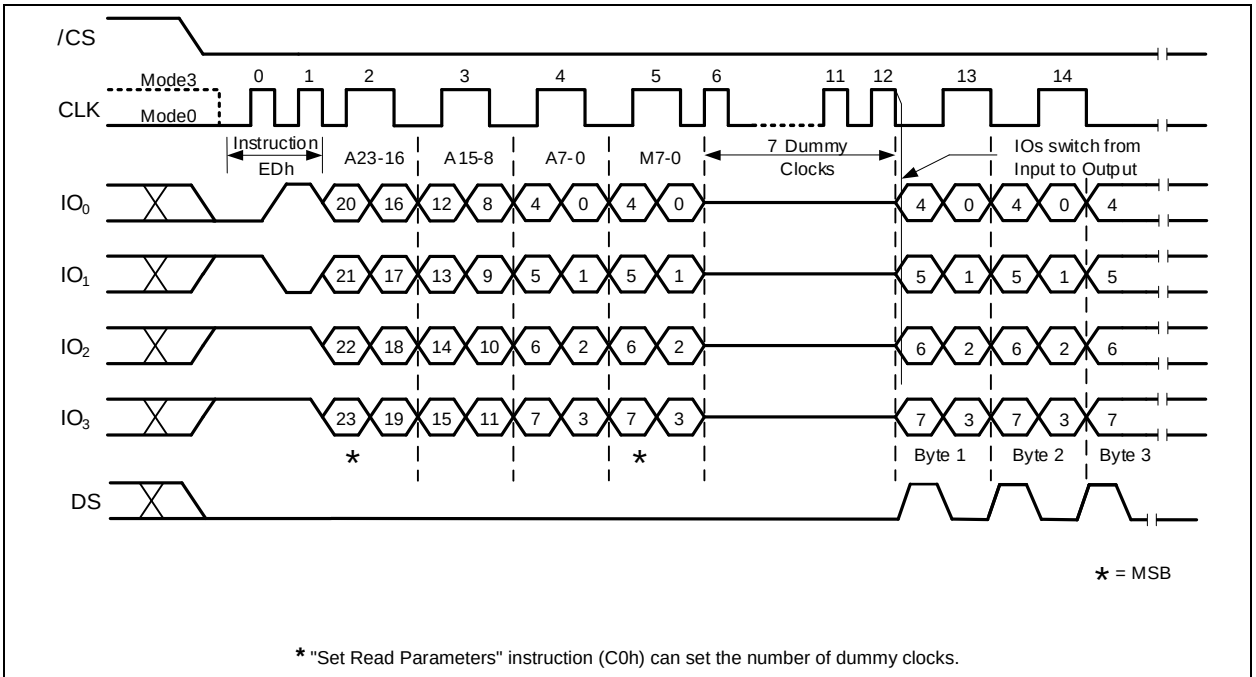

Figure 6.4.23c. DTR Fast Read Quad I/O (Initial instruction or previous M5-4¹10, QPI Mode)

32-Bit Address is required when the device is operating in 4-Byte Address Mode

6.4.24 DTR Fast Read Quad I/O with 4-Byte Address (EEh)

The DTR Fast Read Quad I/O with 4-Byte Address instruction is similar to the DTR Fast Read Quad I/O instruction except that it requires 32-bit address instead of 24-bit address. Whether the device is operating in 3-Byte Address Mode or 4-byte Address Mode, the DTR Fast Read Quad I/O with 4-Byte Address instruction will always require a 32-bit address to access the entire memory.

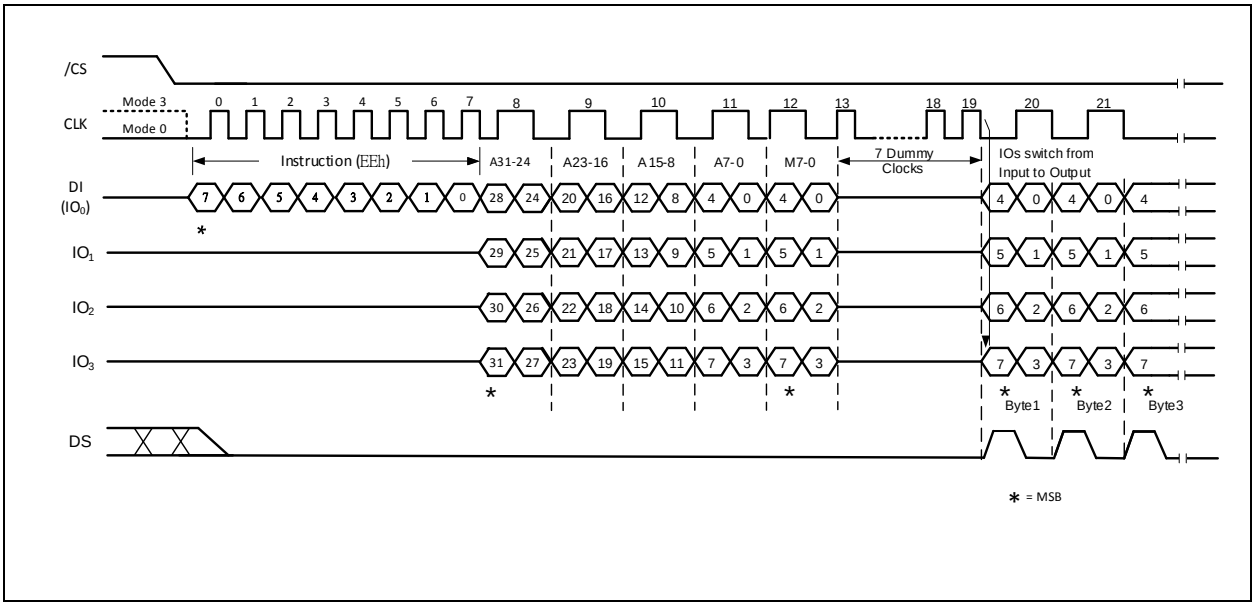

Figure 6.4.24a. DTR Fast Read Dual I/O w/ 4-Byte Addr. (Initial instruction or previous M5-4¹10, SPI Mode only)

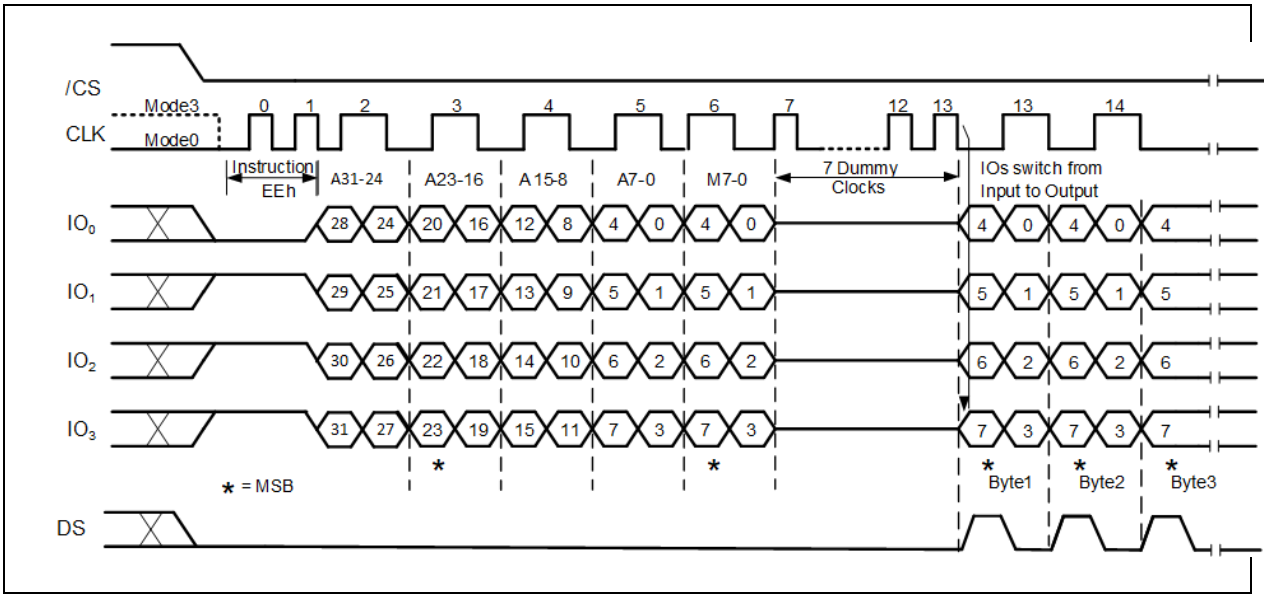

Figure 6.4.24b. DTR Fast Read Dual I/O w/ 4-Byte Addr. (Initial instruction or previous M5-4¹10, QPI Mode only)

6.4.25 Fast Read Quad I/O with 4-Byte Address (ECh)

The Fast Read Quad I/O with 4-Byte Address instruction is similar to the Fast Read Quad I/O instruction except that it requires a 32-bit address instead of a 24-bit address. Whether the device is operating in a 3-Byte Address Mode or a 4-byte Address Mode, the Fast Read Quad I/O with 4-Byte Address instruction will always require a 32-bit address to access the entire 256M-bit ~2G-bit memory.

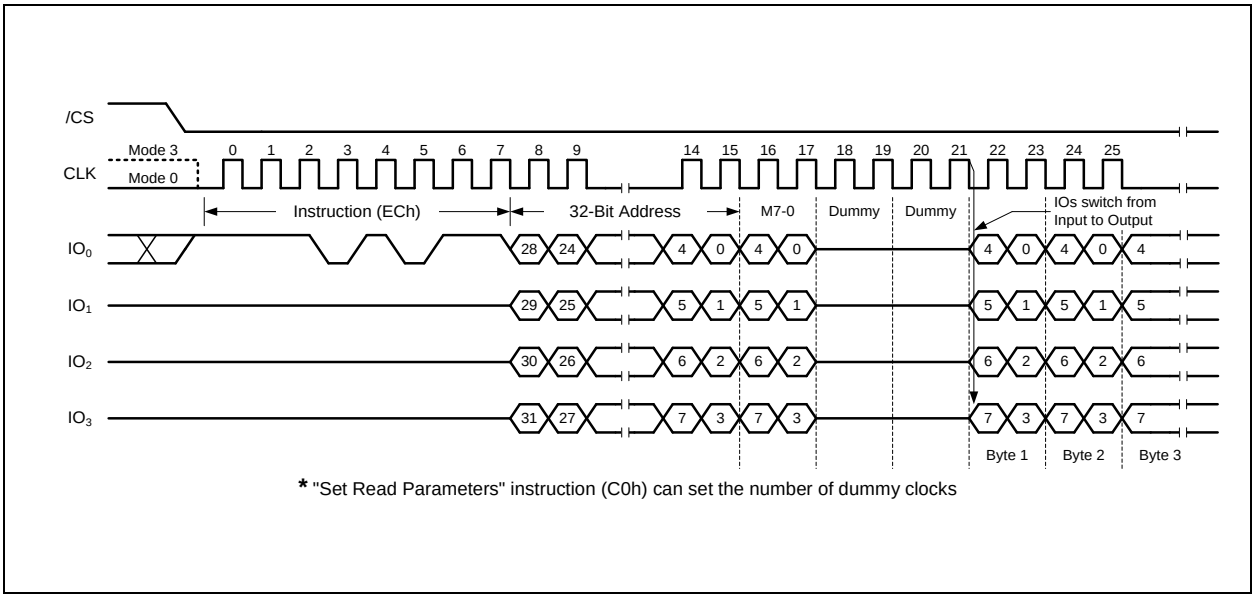

Figure 6.4.25a. Fast Read Quad I/O w/ 4-Byte Addr. (Initial instruction or previous M5-4¹10, SPI Mode)

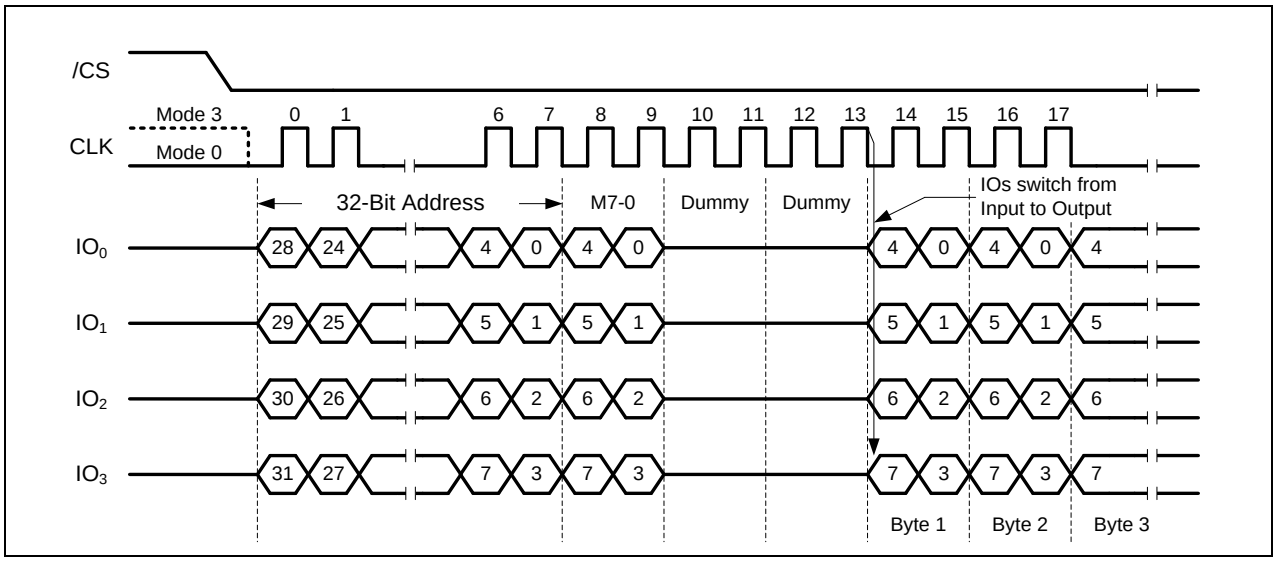

Figure 6.4.25b. Fast Read Quad I/O w/ 4-Byte Addr. (Previous instruction set M5-4=10, SPI Mode only)

Fast Read Quad I/O with "8/16/32/64-Byte Wrap Around" in Standard SPI mode

The Fast Read Quad I/O instruction can also be used to access a specific portion within a page by issuing a "Set Burst with Wrap" (77h) command prior to ECh. The "Set Burst with Wrap" (77h) command can either enable or disable the "Wrap Around" feature for the following ECh commands. When "Wrap Around" is enabled, the data being accessed can be limited to either an 8, 16, 32 or 64-byte section of a 256-byte page. The output data starts at the initial address specified in the instruction. Once it reaches the ending boundary of the 8/16/32/64-byte section, the output will wrap around to the beginning boundary automatically until /CS is pulled high to terminate the command.

The Burst with Wrap feature allows applications that use cache to quickly fetch a critical address and then fill the cache afterwards within a fixed length (8/16/32/64-byte) of data without issuing multiple read commands.

Fast Read Quad I/O with 4-Byte Address (ECh) in QPI Mode

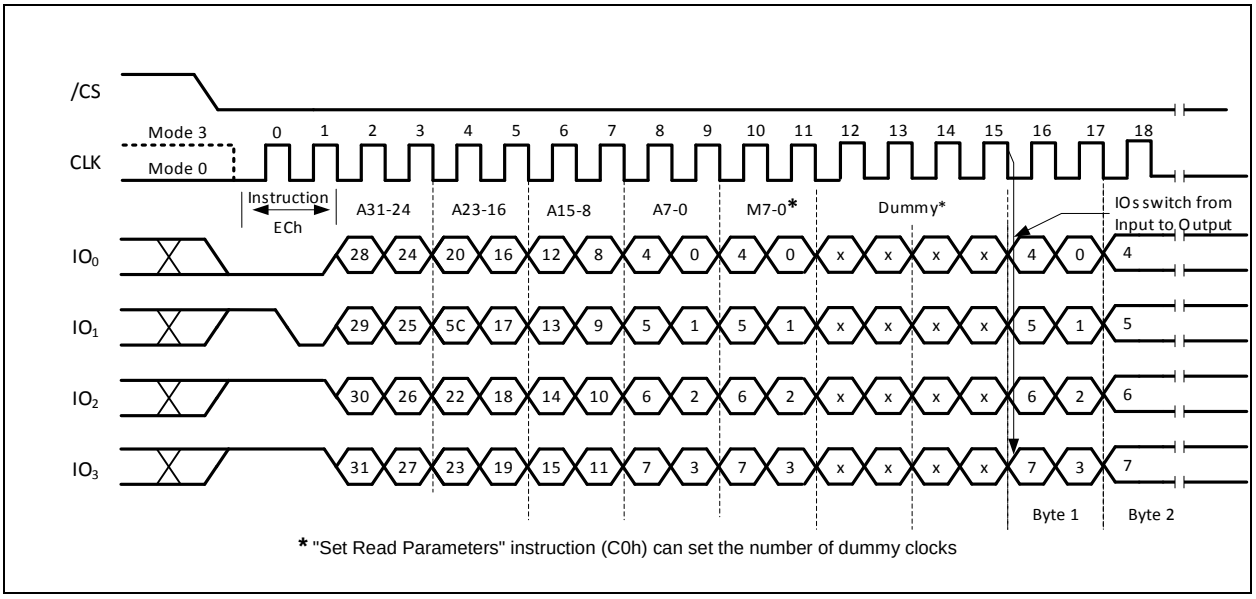

Figure 6.4.25a. Fast Read Quad I/O w/ 4-Byte Addr. (Initial instruction or previous M5-4¹10, SPI Mode)

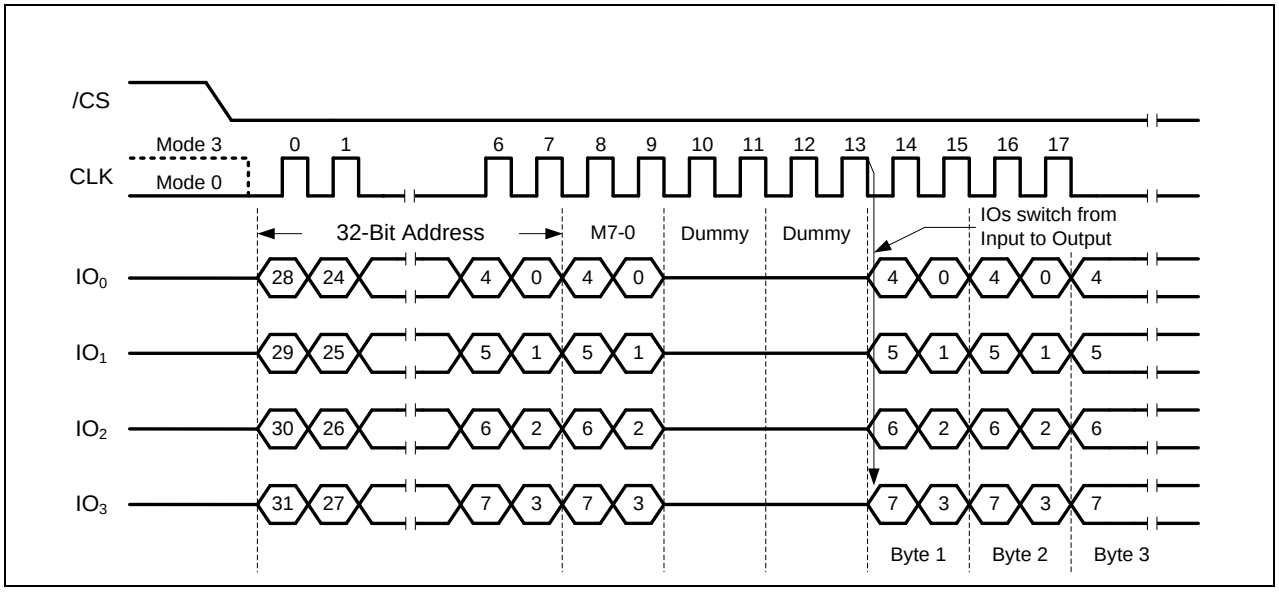

Figure 6.4.25b. Fast Read Quad I/O w/ 4-Byte Addr. (Previous instruction set M5-4=10, SPI Mode only)

6.4.26 Set Burst with Wrap (77h)

In Standard SPI mode, the Set Burst with Wrap (77h) instruction is used in conjunction with “Fast Read Quad I/O(EBh)”, Fast Read Quad I/O with 4-Byte Address (ECh),“DTR Fast Read Quad I/O (EDh)” , and DTR Fast Read Quad I/O with 4-Byte Address(EEh) instructions, to access a fixed length of 8/16/32/64-byte section within a 256-byte page. Certain applications can benefit from this feature and improve the overall system code execution performance.

Similar to a Quad I/O instruction, the Set Burst with Wrap instruction is initiated by driving the /CS pin low and then shifting the instruction code “77h” followed by 24dummy bits and 8 “Wrap Bits”, W7-0. The instruction sequence is shown in Figure 0 . Wrap bit W7 and the lower nibble W3-0 are not used.

W6, W5	W4 = 0		W4 =1 (DEFAULT)	
	Wrap Around	Wrap Length	Wrap Around	Wrap Length
0 0	Yes	8-byte	No	N/A
0 1	Yes	16-byte	No	N/A
1 0	Yes	32-byte	No	N/A
1 1	Yes	64-byte	No	N/A

Once W6-4 is set by a Set Burst with Wrap instruction, the “Fast Read Quad I/O(EBh)”, Fast Read Quad I/O with 4-Byte Address (ECh), “DTR Fast Read Quad I/O (EDh)”, and DTR Fast Read Quad I/O with 4-Byte Address(EEh) instructions will access the 8/16/32/64-byte section within any page. To exit the “Wrap Around” function and return to normal read operation, another Set Burst with Wrap instruction should be issued to set W4 = 1. The default value of W4 upon power on or after a software/hardware reset is 1.

In QPI mode, the “Burst Read with Wrap (0Ch)” instruction should be used to perform the Read operation with “Wrap Around” feature. The Wrap Length set by W5-4 in Standard SPI mode is still valid in QPI mode and can also be re-configured by “Set Read Parameters (C0h)” instruction. Refer to the link “6.4.51 Burst Read with Wrap (0Ch)” and “6.4.14 Fast Read with 4-Byte Address (0Ch)” for details.

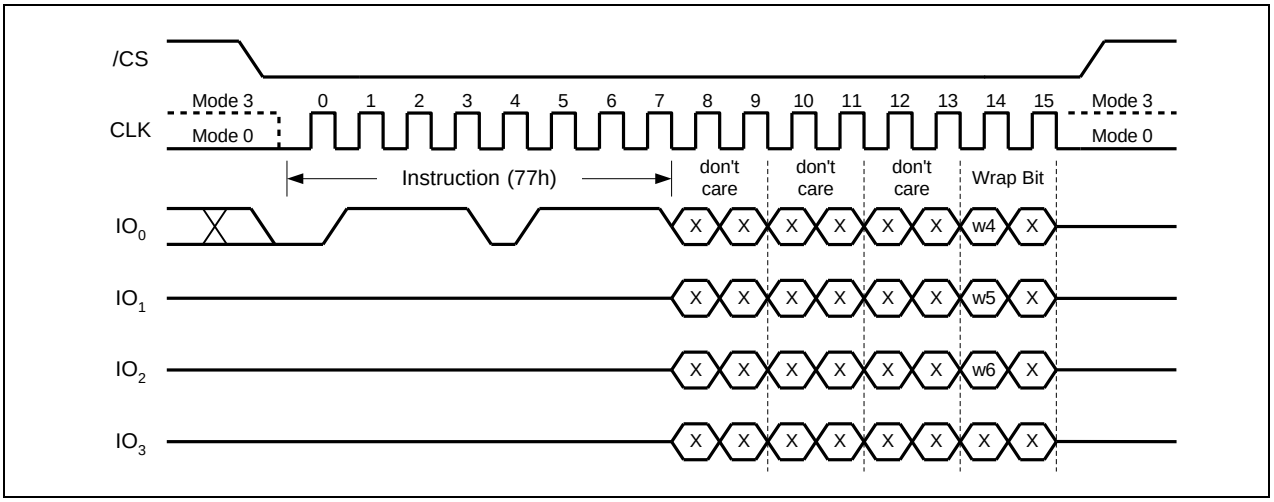

Figure 0. Set Burst with Wrap Instruction (SPI Mode only)

6.4.27 Page Program (02h)

The Page Program instruction allows from one byte to 256 bytes (a page) of data to be programmed at previously erased (FFh) memory locations. A Write Enable instruction must be executed before the device will accept the Page Program Instruction (Status Register bit WEL= 1). The instruction is initiated by driving the /CS pin low then shifting the instruction code “02h” followed by a 24/32-bit address (A23/A31-A0) and at least one data byte, into the DI pin. The /CS pin must be held low for the entire length of the instruction while data is being sent to the device. The Page Program instruction sequence is shown in Figure 6.4.27.

If an entire 256 byte page is to be programmed, the last address byte (the 8 least significant address bits) should be set to 0. If the last address byte is not zero, and the number of clocks exceeds the remaining page length, the addressing will wrap to the beginning of the page. In some cases, less than 256 bytes (a partial page) can be programmed without having any effect on other bytes within the same page. One condition to perform a partial page program is that the number of clocks cannot exceed the remaining page length. If more than 256 bytes are sent to the device, the addressing will wrap to the beginning of the page and overwrite previously sent data.

As with the write and erase instructions, the /CS pin must be driven high after the eighth bit of the last byte has been latched. If this is not done, the Page Program instruction will not be executed. After /CS is driven high, the self-timed Page Program instruction will commence for a time duration of tpp (See AC Characteristics). While the Page Program cycle is in progress, the Read Status Register instruction may still be accessed for checking the status of the BUSY bit. The BUSY bit is a 1 during the Page Program cycle and becomes a 0 when the cycle is finished and the device is ready to accept other instructions again. After the Page Program cycle has finished, the Write Enable Latch (WEL) bit in the Status Register is cleared to 0. The Page Program instruction will not be executed if the addressed page is protected by the Block Protect (CMP, TB, BP3, BP2, BP1, and BP0) bits or the Flex Block/Sector Locks.

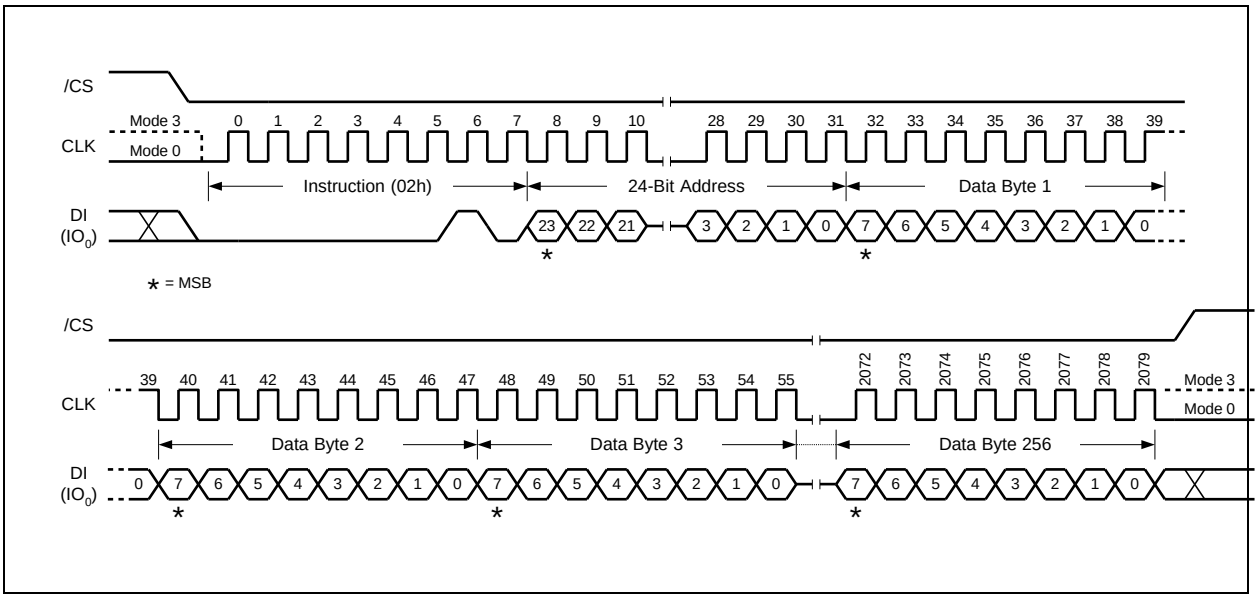

Figure 6.4.27a. Page Program Instruction (SPI Mode)

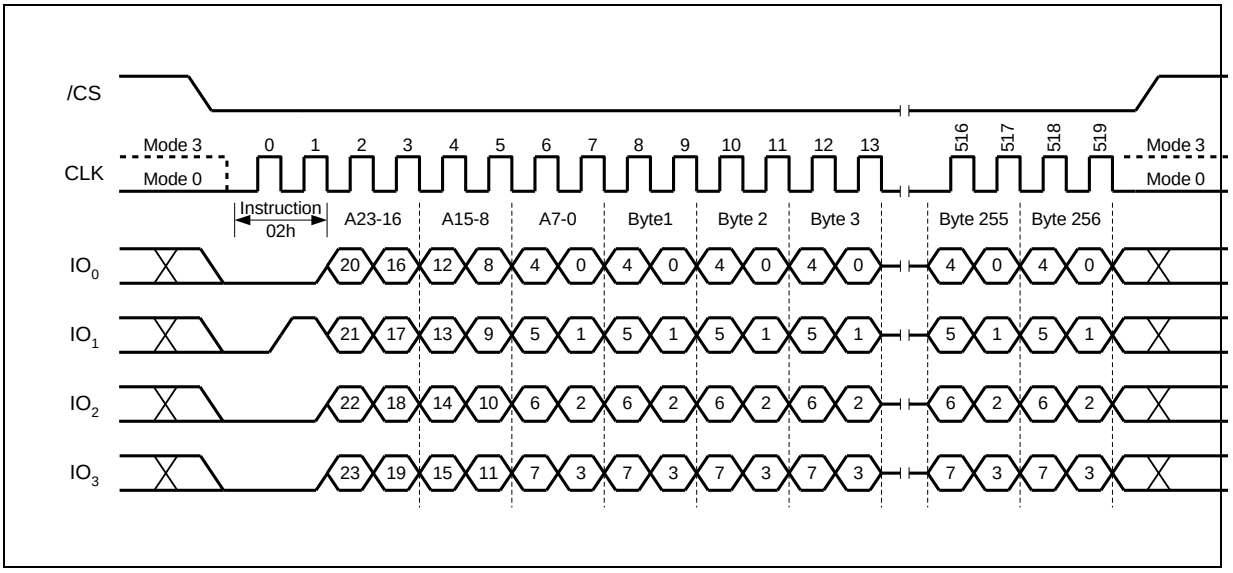

Figure 6.4.27b. Page Program Instruction (QPI Mode)

32-Bit Address is required when the device is operating in 4-Byte Address Mode

6.4.28 Page Program with 4-Byte Address (12h)

The Page Program with 4-Byte Address instruction is similar to the Page Program instruction except that it requires a 32-bit address instead of a 24-bit address. Whether the device is operating in 3-Byte Address Mode or 4-byte Address Mode, the Page Program with 4-Byte Address instruction will always require a 32-bit address to access the entire 256M-bit ~2G-bit memory.

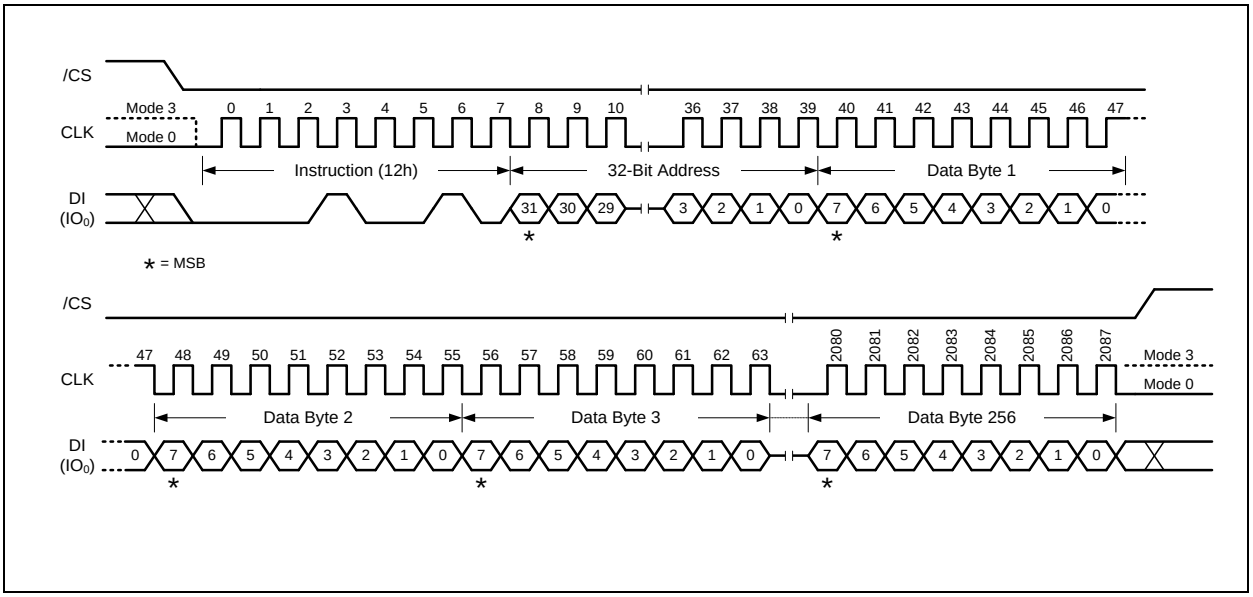

Figure 6.4.28. Page Program with 4-Byte Addr. (SPI Mode Only)

6.4.29 Quad Input Page Program (32h)

The Quad Page Program instruction allows up to 256 bytes of data to be programmed at previously erased (FFh) memory locations using four pins: IO_0, IO_1, IO_2, and IO_3. The Quad Page Program can improve performance for PROM Programmers and applications that have slow clock speeds <5MHz. Systems with faster clock speed will not realize much benefit for the Quad Page Program instruction since the inherent page program time is much greater than the time it takes to clock-in the data.

To use Quad Page Program, the Quad Enable (QE) bit in Status Register-2 must be set to 1. A Write Enable instruction must be executed before the device will accept the Quad Page Program instruction (Status Register-1, WEL=1). The instruction is initiated by driving the /CS pin low then shifting the instruction code "32h" followed by a 24/32-bit address (A23/A31-A0) and at least one data byte, into the IO pins. The /CS pin must be held low for the entire length of the instruction while data is being sent to the device. All other functions of Quad Page Program are identical to standard Page Program. The Quad Page Program instruction sequence is shown in Figure 6.2.29.

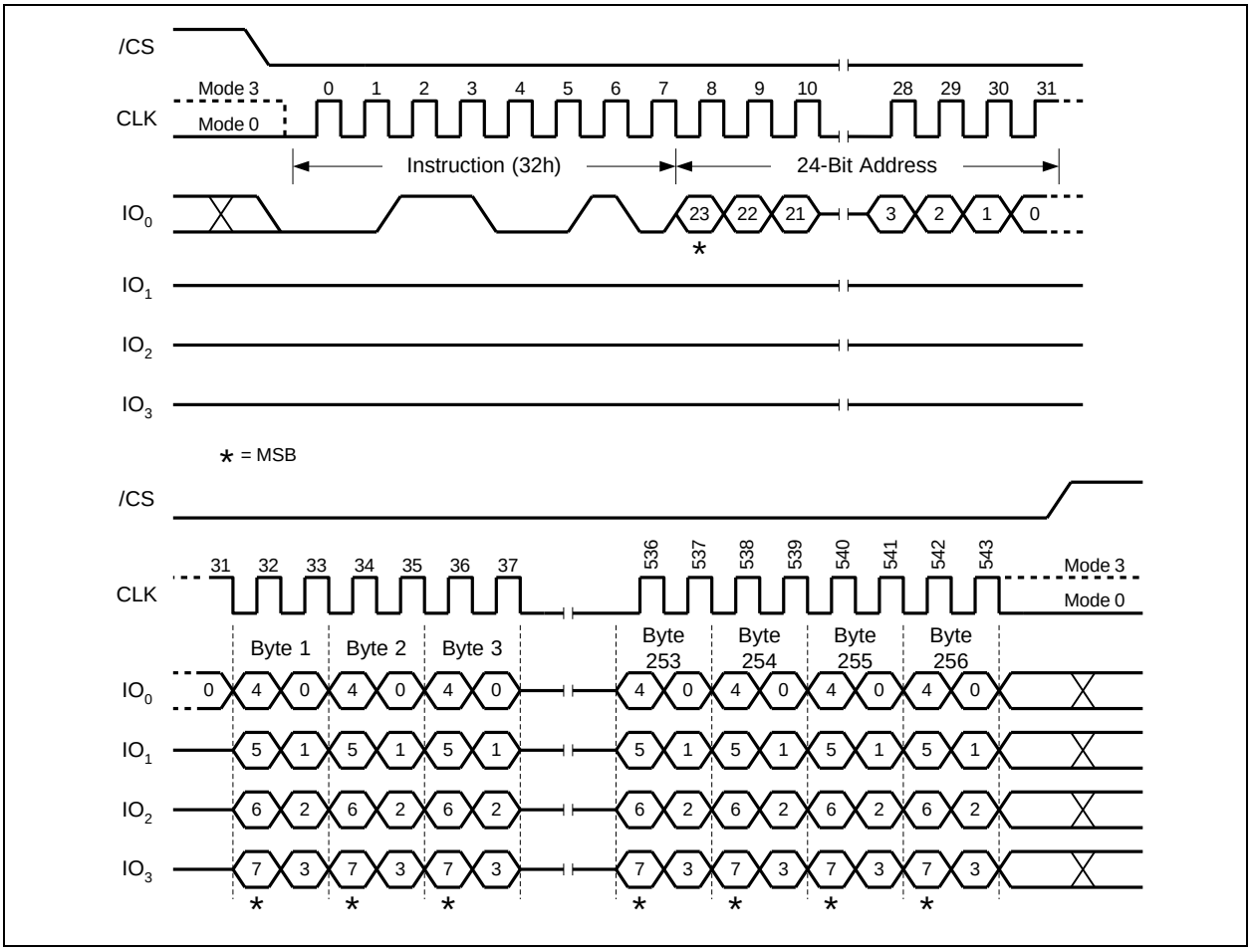

Figure 6.4.29. Quad Input Page Program Instruction (SPI Mode only)

32-Bit Address is required when the device is operating in 4-Byte Address Mode

6.4.30 Quad Input Page Program with 4-Byte Address (34h)

The Quad Input Page Program with 4-Byte Address instruction is similar to the Quad Input Page Program instruction except that it requires a 32-bit address instead of a 24-bit address. Whether the device is operating in 3-Byte Address Mode or 4-byte Address Mode, the Quad Input Page Program with 4-Byte Address instruction will always require a 32-bit address to access the entire 256M-bit ~2G-bit memory.

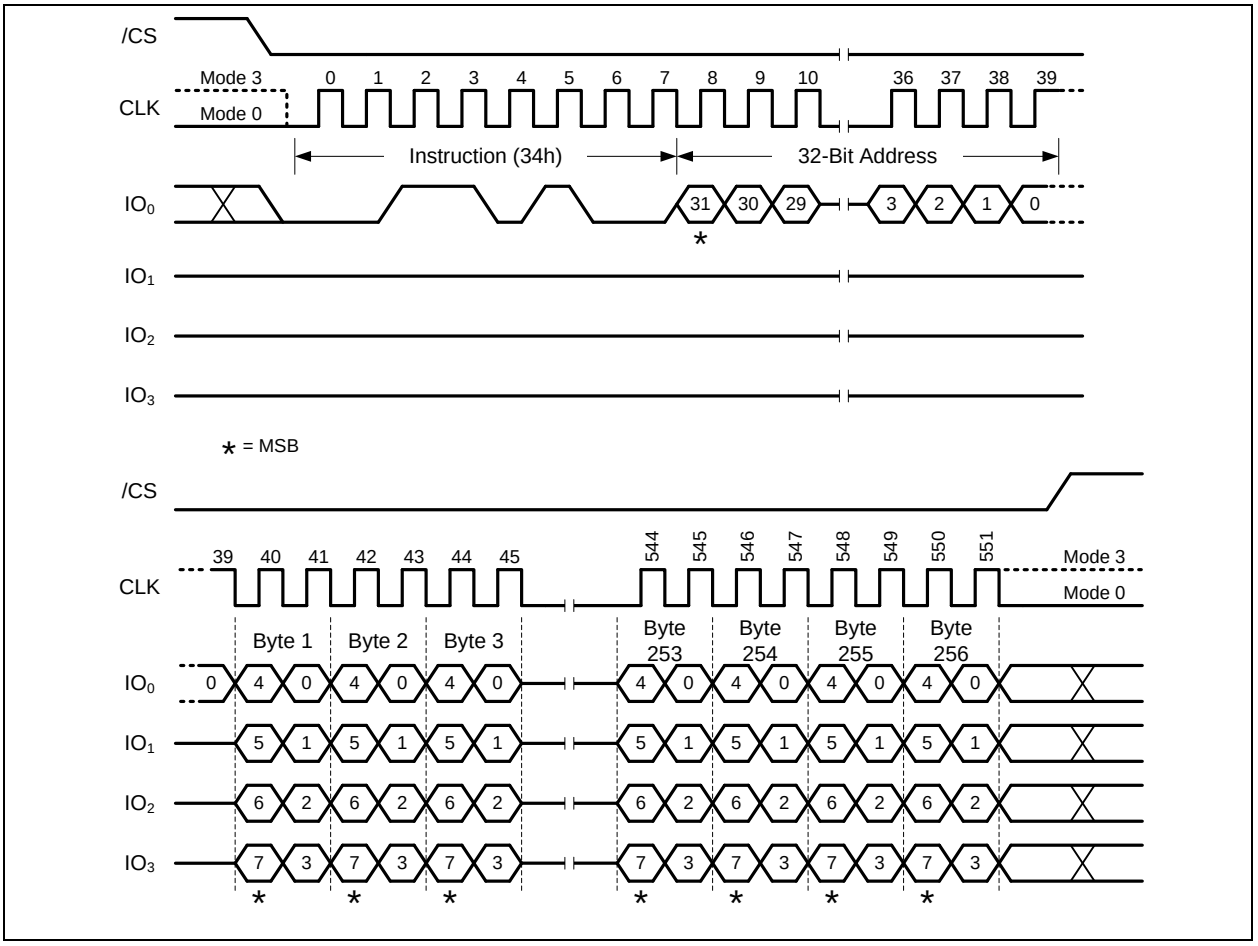

Figure 6.4.30. Quad Input Page Program with 4-Byte Addr. (SPI Mode only)

6.4.31 Sector Erase (20h)

The Sector Erase instruction sets all memory within a specified sector (4K-bytes) to the erased state of all 1s (FFh). A Write Enable instruction must be executed before the device will accept the Sector Erase Instruction (Status Register bit WEL must equal 1). The instruction is initiated by driving the /CS pin low and shifting the instruction code “20h” followed a 24/32-bit sector address (A23/A31-A0). The Sector Erase instruction sequence is shown in Figure 6.2.31.

The /CS pin must be driven high after the eighth bit of the last byte has been latched. If this is not done, the Sector Erase instruction will not be executed. After /CS is driven high, the self-timed Sector Erase instruction will commence for a time duration of t_{SE} (See AC Characteristics). While the Sector Erase cycle is in progress, the Read Status Register instruction may still be accessed for checking the status of the BUSY bit. The BUSY bit is a 1 during the Sector Erase cycle and becomes a 0 when the cycle is finished, and the device is ready to accept other instructions again. After the Sector Erase cycle has finished, the Write Enable Latch (WEL) bit in the Status Register is cleared to 0. The Sector Erase instruction will not be executed if the addressed page is protected by the Block Protect (CMP, TB, BP3, BP2, BP1, and BP0) bits or the Flex Block/Sector Locks.

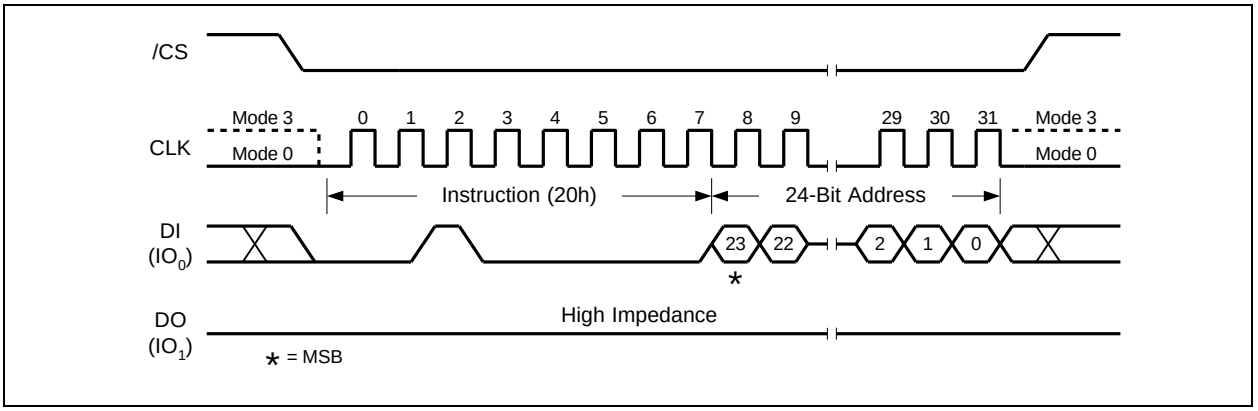

Figure 6.4.31a. Sector Erase Instruction (SPI Mode)

32-Bit Address is required when the device is operating in 4-Byte Address Mode

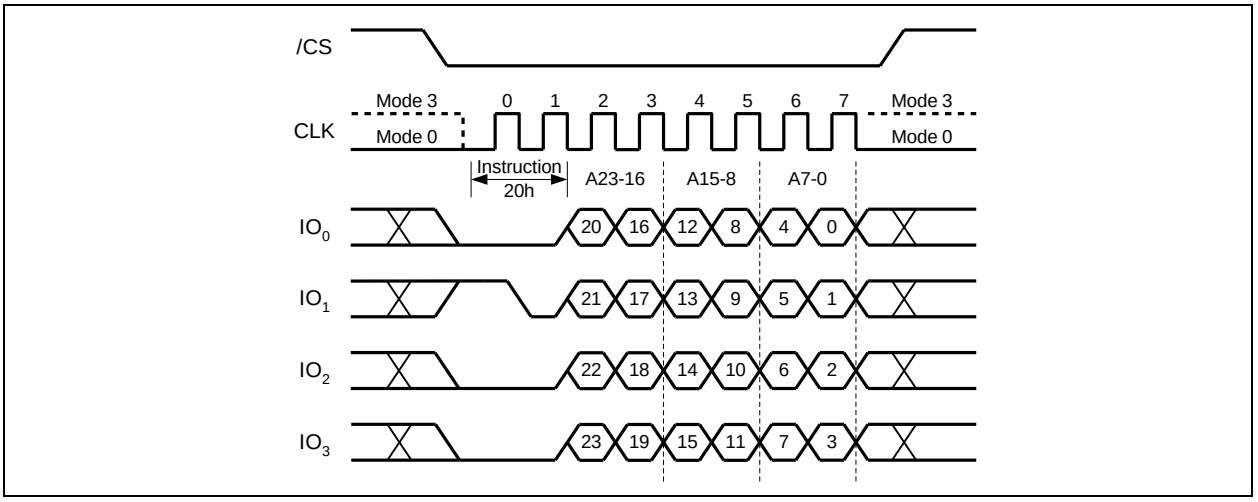

Figure 6.4.31b. Sector Erase Instruction (QPI Mode)

32-Bit Address is required when the device is operating in 4-Byte Address Mode

6.4.32 Sector Erase with 4-Byte Address (21h)

The Sector Erase with 4-Byte Address instruction is similar to the Sector Erase instruction except that it requires a 32-bit address instead of a 24-bit address. Whether the device is operating in 3-Byte Address Mode or 4-byte Address Mode, the Sector Erase with 4-Byte Address instruction will always require a 32-bit address to access the entire 256M-bit ~2G-bit memory.

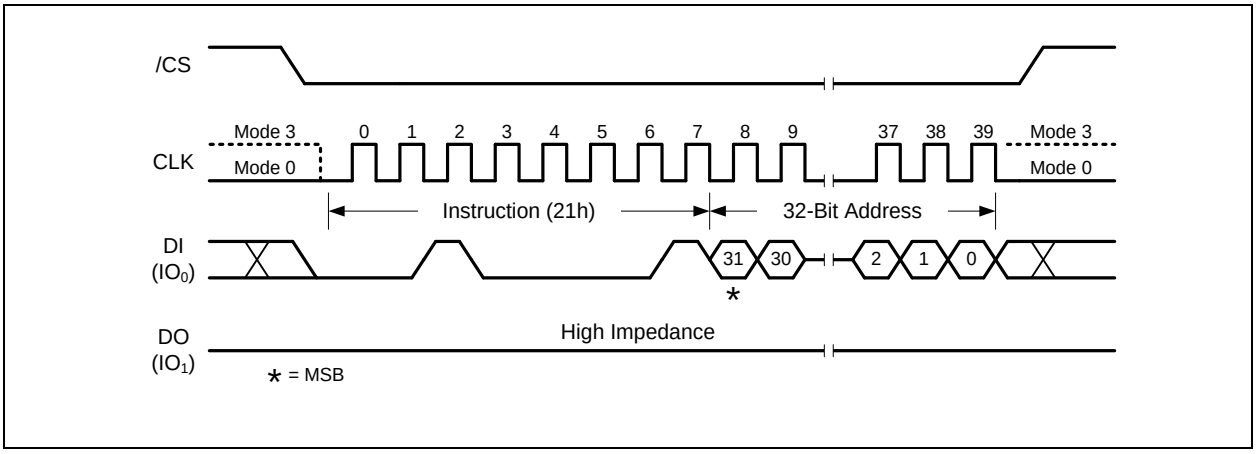

Figure 6.4.32. Sector Erase with 4-Byte Address Instruction (SPI Mode Only)

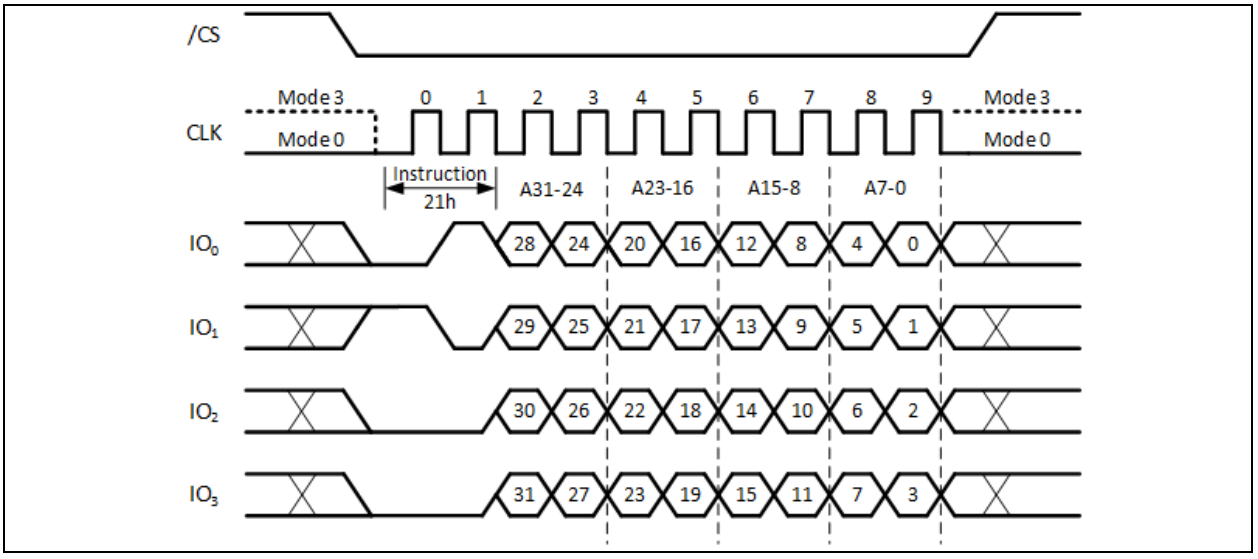

Figure 6.4.32b. Sector Erase with 4-Byte Address Instruction (QPI Mode)

6.4.33 32KB Block Erase (52h)

The Block Erase instruction sets all memory within a specified block (32K-bytes) to the erased state of all 1s (FFh). A Write Enable instruction must be executed before the device will accept the Block Erase Instruction (Status Register bit WEL must equal 1). The instruction is initiated by driving the /CS pin low and shifting the instruction code "52h" followed a 24/32-bit block address (A23/A31-A0). The Block Erase instruction sequence is shown in Figure 6.2.33.

The /CS pin must be driven high after the eighth bit of the last byte has been latched. If this is not done, the Block Erase instruction will not be executed. After /CS is driven high, the self-timed Block Erase instruction will commence for a time duration of t_{BE1} (See AC Characteristics). While the Block Erase cycle is in progress, the Read Status Register instruction may still be accessed for checking the status of the BUSY bit. The BUSY bit is a 1 during the Block Erase cycle and becomes a 0 when the cycle is finished, and the device is ready to accept other instructions again. After the Block Erase cycle has finished, the Write Enable Latch (WEL) bit in the Status Register is cleared to 0. The Block Erase instruction will not be executed if the addressed page is protected by the Block Protect (CMP, TB, BP3, BP2, BP1, and BP0) bits or the Flex Block/Sector Locks.

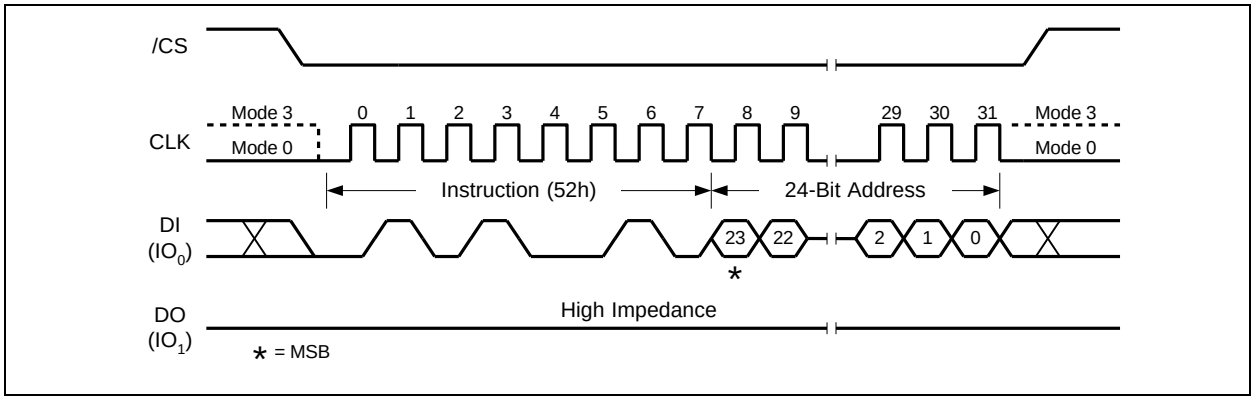

Figure 6.4.33a. 32KB Block Erase Instruction (SPI Mode)

32-Bit Address is required when the device is operating in 4-Byte Address Mode

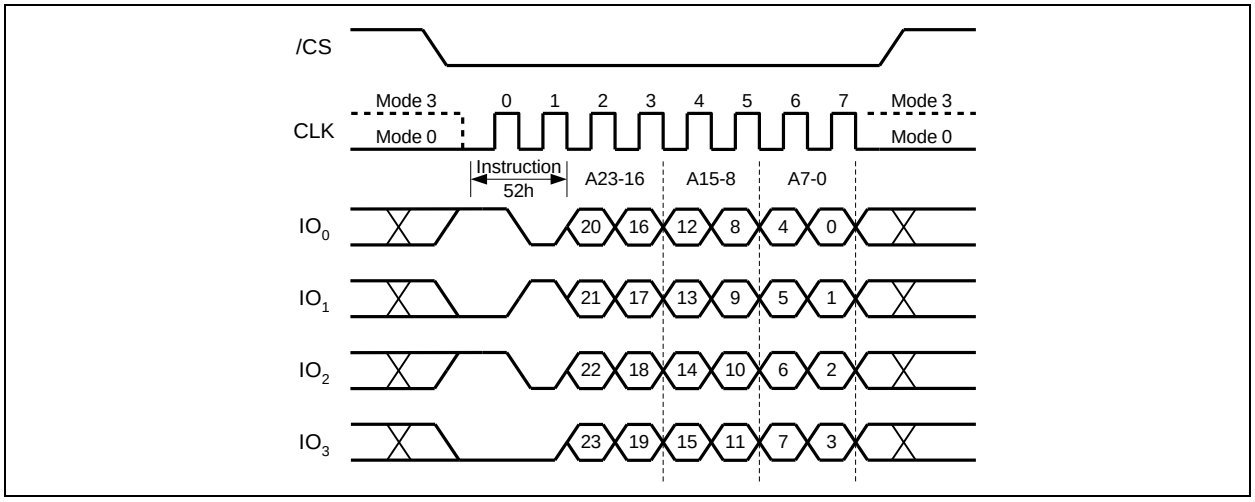

Figure 6.4.33b. 32KB Block Erase Instruction (QPI Mode)

32-Bit Address is required when the device is operating in 4-Byte Address Mode

6.4.34 64KB Block Erase (D8h)

The Block Erase instruction sets all memory within a specified block (64K-bytes) to the erased state of all 1s (FFh). A Write Enable instruction must be executed before the device will accept the Block Erase Instruction (Status Register bit WEL must equal 1). The instruction is initiated by driving the /CS pin low and shifting the instruction code "D8h" followed a 24/32-bit block address (A23/A31-A0). The Block Erase instruction sequence is shown in Figure 6.2.34.

The /CS pin must be driven high after the eighth bit of the last byte has been latched. If this is not done, the Block Erase instruction will not be executed. After /CS is driven high, the self-timed Block Erase instruction will commence for a time duration of t_{BE} (See AC Characteristics). While the Block Erase cycle is in progress, the Read Status Register instruction may still be accessed for checking the status of the BUSY bit. The BUSY bit is a 1 during the Block Erase cycle and becomes a 0 when the cycle is finished, and the device is ready to accept other instructions again. After the Block Erase cycle has finished, the Write Enable Latch (WEL) bit in the Status Register is cleared to 0. The Block Erase instruction will not be executed if the addressed page is protected by the Block Protect (CMP, TB, BP3, BP2, BP1, and BP0) bits or the Flex Block/Sector Locks.

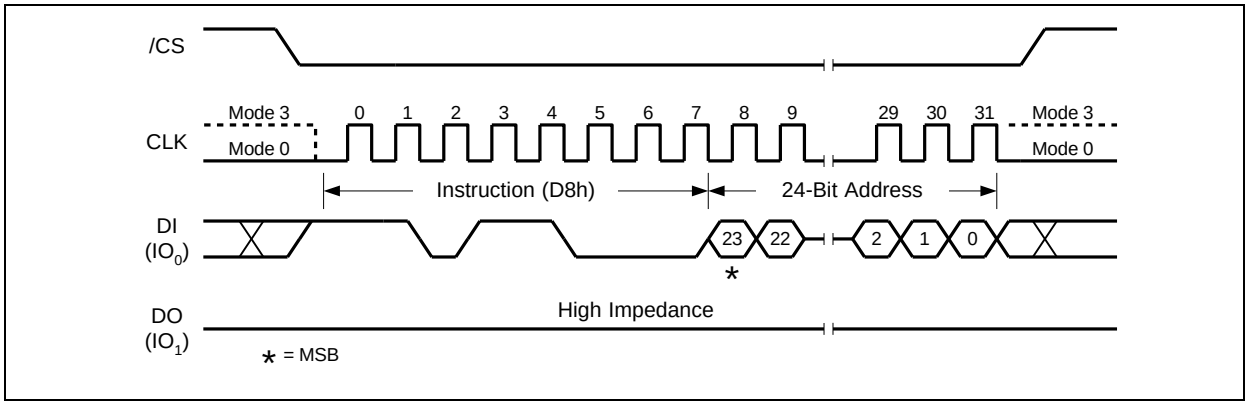

Figure 6.4.34a. 64KB Block Erase Instruction (SPI Mode)

32-Bit Address is required when the device is operating in 4-Byte Address Mode

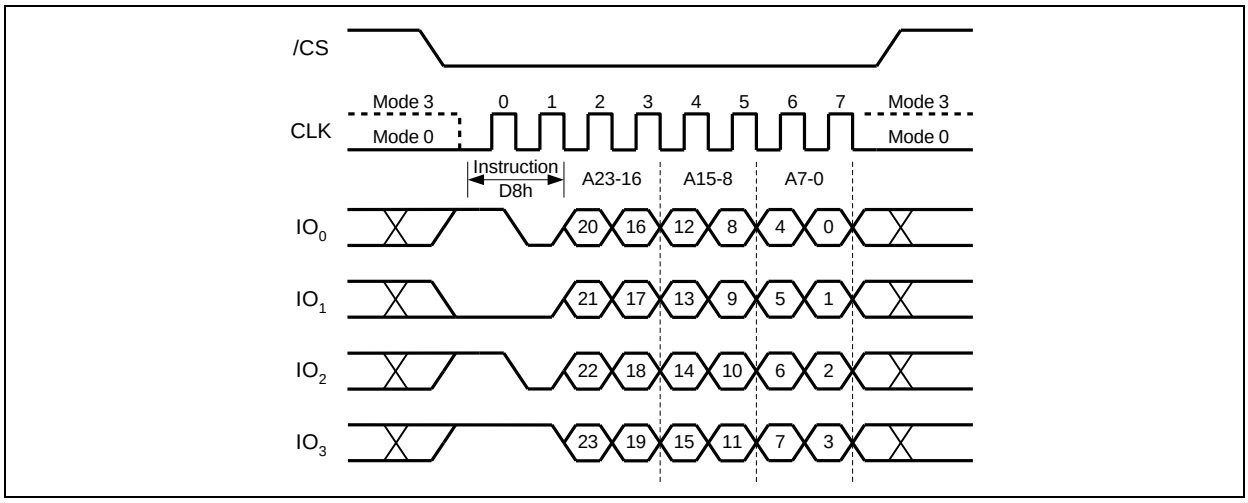

Figure 6.4.34b. 64KB Block Erase Instruction (QPI Mode)

32-Bit Address is required when the device is operating in 4-Byte Address Mode

6.4.35 64KB Block Erase with 4-Byte Address (DCh)

The 64KB Block Erase with 4-Byte Address instruction is similar to the 64KB Block Erase instruction except that it requires a 32-bit address instead of a 24-bit address. Whether the device is operating in 3-Byte Address Mode or 4-byte Address Mode, the 64KB Block Erase with 4-Byte Address instruction will always require 32-bit address to access the entire 256M-bit ~2G-bit memory.

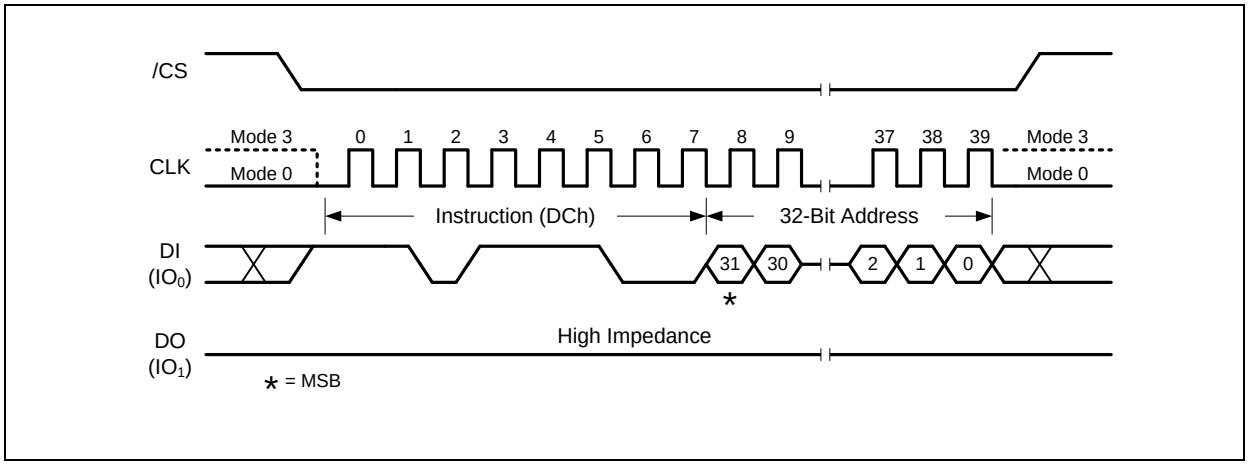

Figure 6.4.35. 64KB Block Erase with 4-Byte Address Instruction (SPI Mode Only)

6.4.36 Chip Erase (C7h / 60h)

The Chip Erase instruction sets all memory within the device to the erased state of all 1s (FFh). A Write Enable instruction must be executed before the device will accept the Chip Erase Instruction (Status Register bit WEL must equal 1). The instruction is initiated by driving the /CS pin low and shifting the instruction code “C7h” or “60h”. The Chip Erase instruction sequence is shown in Figure 6.2.36.

The /CS pin must be driven high after the eighth bit has been latched. If this is not done, the Chip Erase instruction will not be executed. After /CS is driven high, the self-timed Chip Erase instruction will commence for a time duration of t_{CE} (See AC Characteristics). While the Chip Erase cycle is in progress, the Read Status Register instruction may still be accessed to check the status of the BUSY bit. The BUSY bit is a 1 during the Chip Erase cycle and becomes a 0 when finished, and the device is ready to accept other instructions again. After the Chip Erase cycle has finished, the Write Enable Latch (WEL) bit in the Status Register is cleared to 0. The Chip Erase instruction will not be executed if any memory region is protected by the Block Protect (CMP, TB, BP3, BP2, BP1, and BP0) bits or the Flex Block/Sector Locks.

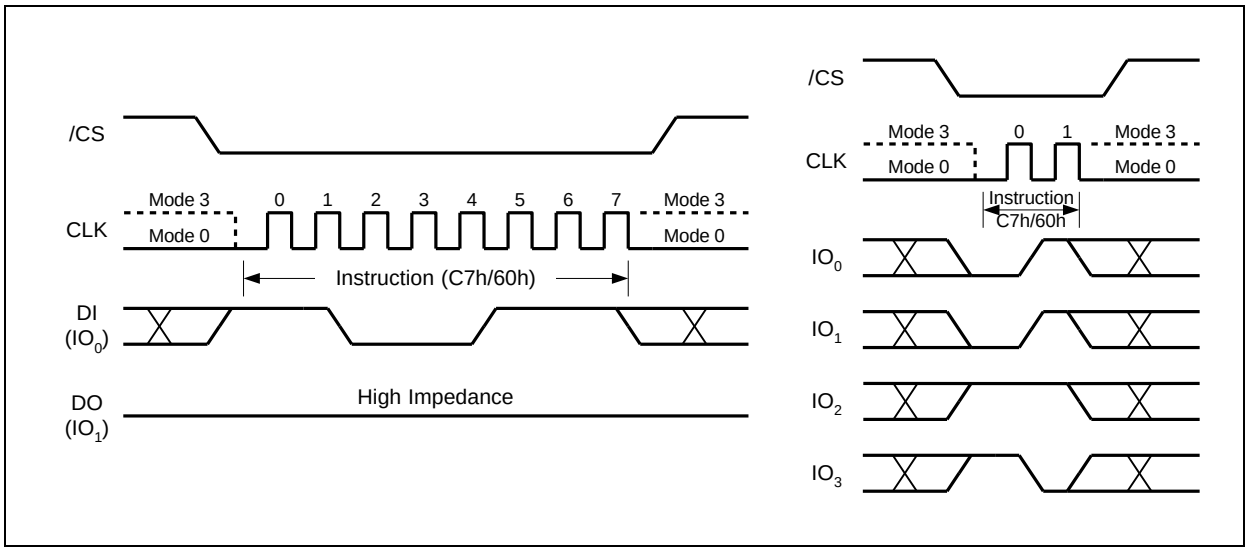

Figure 6.4.36. Chip Erase Instruction for SPI Mode (left) or QPI Mode (right)

6.4.37 Erase / Program Suspend (75h)

The Erase/Program Suspend instruction “75h”, allows the system to interrupt a Sector or Block Erase operation or a Page Program operation and then read from or program/erase data to, any other sectors or blocks. The Erase/Program Suspend instruction sequence is shown in Figure 6.2.37.

The Write Status Register instruction (01h/31h/11h) and Erase instructions (20h, 21h, 52h, D8h, DCh, C7h, 60h, 44h) are not allowed during Erase Suspend. Erase Suspend is valid only during the Sector or Block erase operation. If written during the Chip Erase operation, the Erase Suspend instruction is ignored. The Write Status Register instruction (01h/31h/11h) and Program instructions (02h, 12h, 32h, 42h) are not allowed during Program Suspend. Program Suspend is valid only during the Page Program or Quad Page Program operation.

The Erase/Program Suspend instruction “75h” will be accepted by the device only if the SUS bit in the Status Register equals to 0 and the BUSY bit equals to 1 while a Sector or Block Erase or a Page Program operation is on-going. If the SUS bit equals to 1 or the BUSY bit equals to 0, the Suspend instruction will be ignored by the device. A maximum of time of “t_{SUS}” (See AC Characteristics) is required to suspend the erase or program operation. The BUSY bit in the Status Register will be cleared from 1 to 0 within “t_{SUS}”, and the SUS bit in the Status Register will be set from 0 to 1 immediately after Erase/Program Suspend. For a previously resumed Erase/Program operation, it is also required that the Suspend instruction “75h” is not issued earlier than a minimum of time of “t_{SUS}” following the preceding Resume instruction “7Ah”.

Unexpected power off during the Erase/Program suspend state will reset the device and release the suspend state. The SUS bit in the Status Register will also reset to 0. The data within the page, sector or block that was being suspended may become corrupted. It is recommended that the user to implement system design techniques against the accidental power interruption and preserve data integrity during erase/program suspend state.

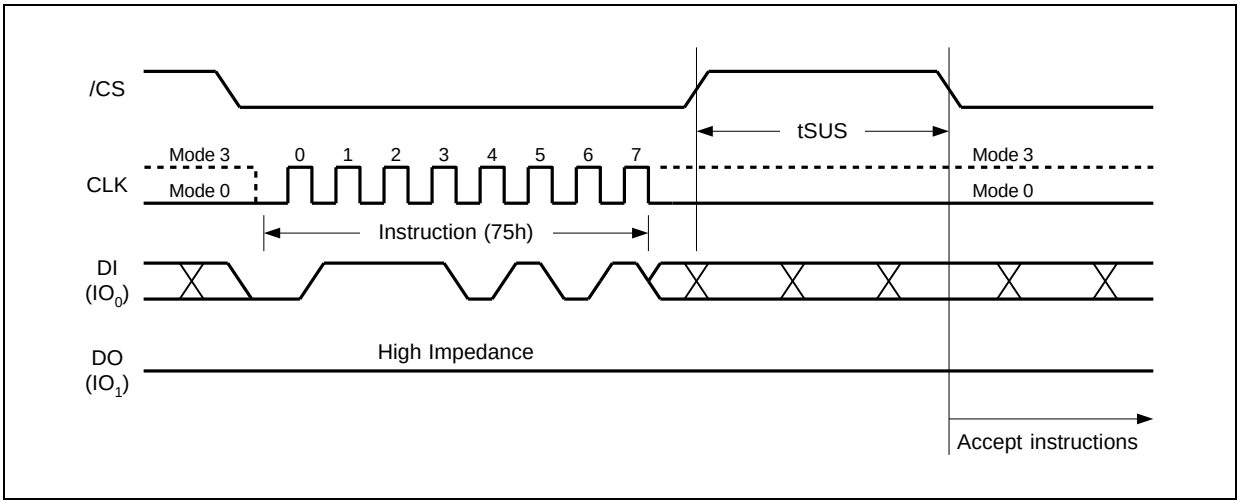

Figure 6.4.37a. Erase/Program Suspend Instruction (SPI Mode)

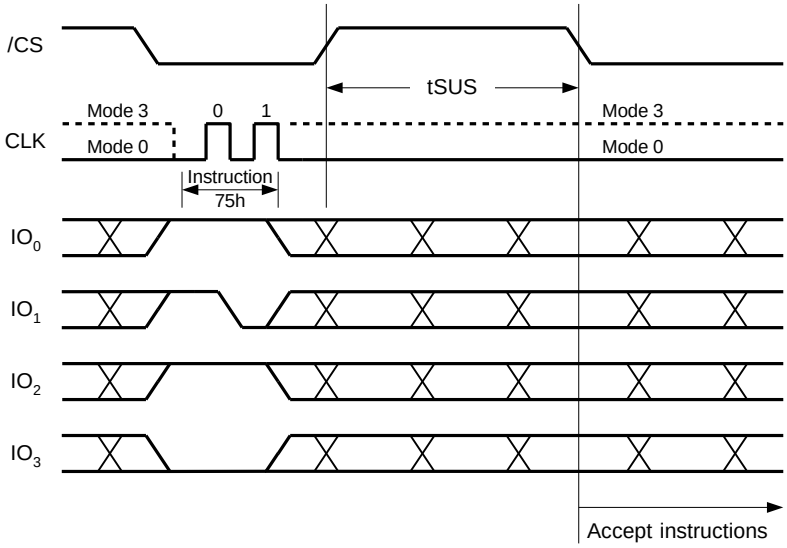

Figure 6.4.37b. Erase/Program Suspend Instruction (QPI Mode)

6.4.38 Erase / Program Resume (7Ah)

The Erase/Program Resume instruction “7Ah” must be written to resume the Sector or Block Erase operation or the Page Program operation after an Erase/Program Suspend. The Resume instruction “7Ah” will be accepted by the device only if the SUS bit in the Status Register equals to 1 and the BUSY bit equals to 0. After issued, the SUS bit will be cleared from 1 to 0 immediately, the BUSY bit will be set from 0 to 1 within 200ns, and the Sector or Block will complete the erase operation, or the page will complete the program operation. If the SUS bit equals to 0 or the BUSY bit equals to 1, the Resume instruction “7Ah” will be ignored by the device. The Erase/Program Resume instruction sequence is shown in Figure 6.4.38.

Resume instruction is ignored if the previous Erase/Program Suspend operation was interrupted by unexpected power off. It is also required that a subsequent Erase/Program Suspend instruction not to be issued within a minimum of time of “t_{SUS}” following a previous Resume instruction.

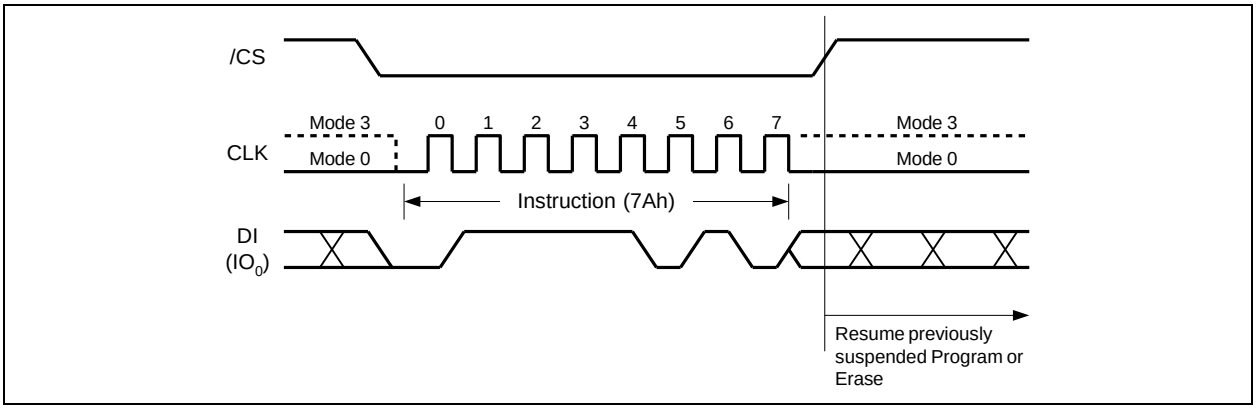

Figure 6.4.38a. Erase/Program Resume Instruction (SPI Mode)

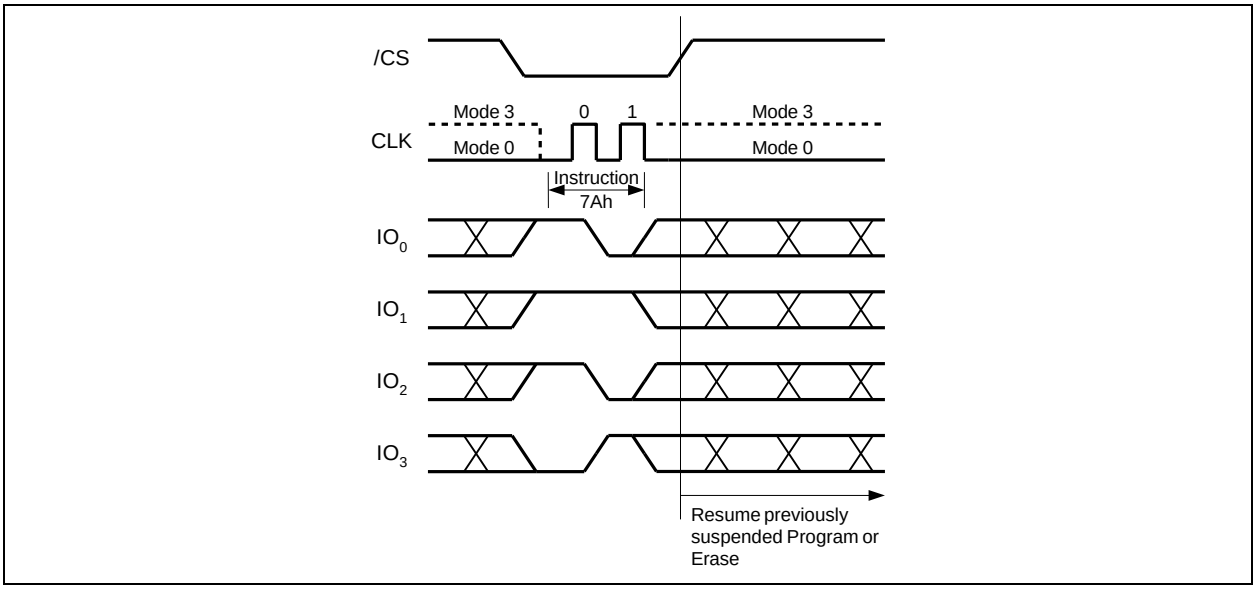

Figure 6.4.38b. Erase/Program Resume Instruction (QPI Mode)

6.4.39 Power-down (B9h)

Although the standby current during normal operation is relatively low, the standby current can be further reduced with the Power-down instruction. The lower power consumption makes the Power-down instruction especially useful for battery powered applications (See ICC1 and ICC2 in AC Characteristics). The instruction is initiated by driving the /CS pin low and shifting the instruction code “B9h” as shown in Figure 6.4.39.

The /CS pin must be driven high after the eighth bit has been latched. If this is not done, the Power-down instruction will not be executed. After /CS is driven high, the power-down state will be entered within the time duration of t_{DP} (See AC Characteristics). While in the power-down state, only the Release Power-down (ABh) instruction, which restores the device to normal operation, will be recognized. All other instructions are ignored. This includes the Read Status Register instruction, which is always available during normal operation. Ignoring all but one instruction makes the Power Down state a useful condition for securing maximum write protection. The device always powers-up in normal operation with the standby current of ICC1.

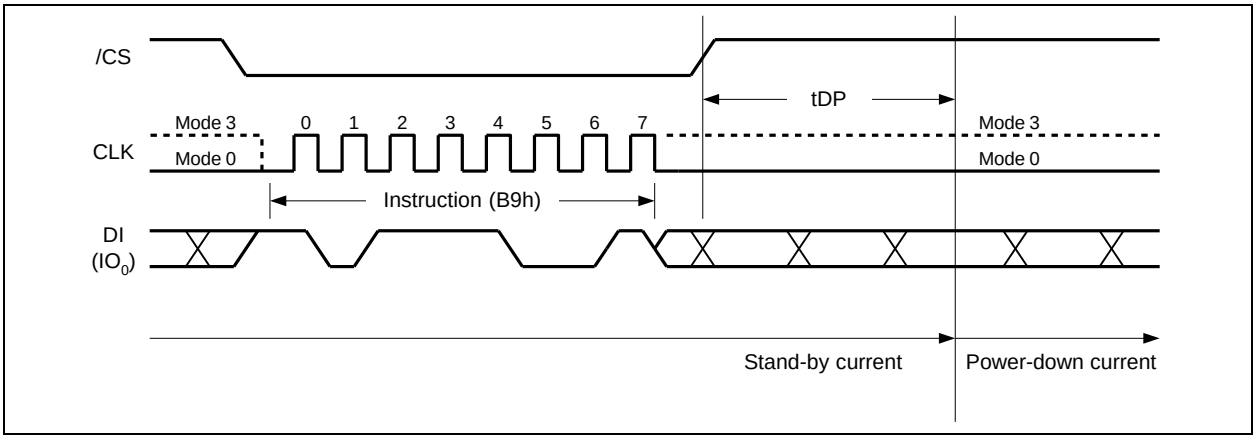

Figure 6.4.39a. Deep Power-down Instruction (SPI Mode)

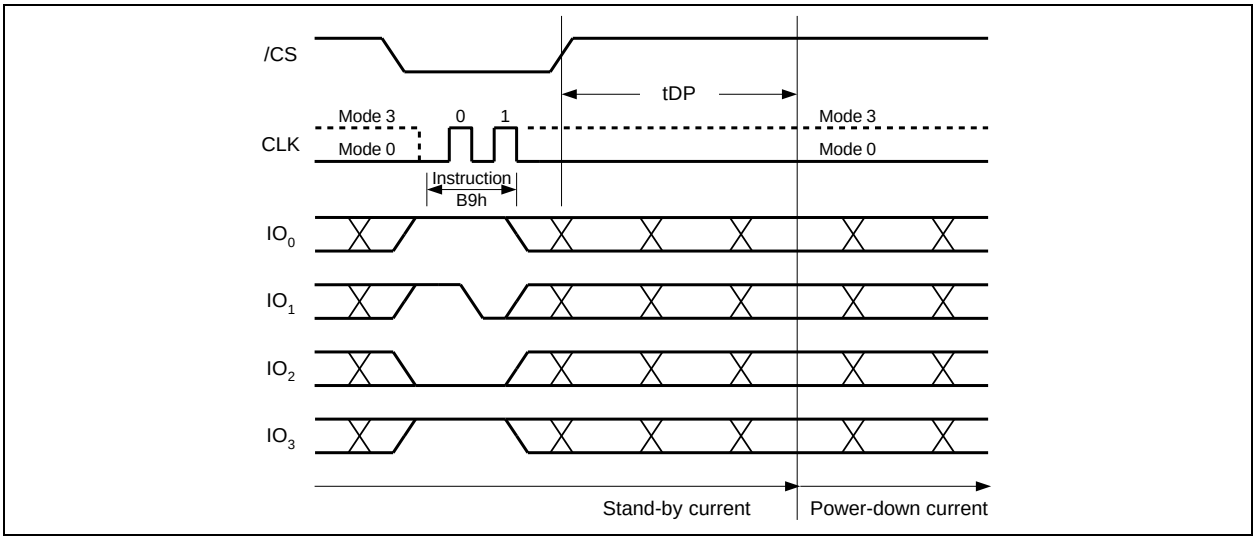

Figure 6.4.39b. Deep Power-down Instruction (QPI Mode)

6.4.40 Release Power-down / Device ID (ABh)

The Release from Power-down / Device ID instruction is a multi-purpose instruction. It can be used to release the device from the power-down state or obtain the devices electronic identification (ID) number.

To release the device from the power-down state, the instruction is issued by driving the /CS pin low, shifting the instruction code “ABh” and driving /CS high as shown in Figure 6.4.40a & b. Release from power-down will take a time of t_{RES1} (See AC Characteristics) before the device will resume normal operation and other instructions are accepted. The /CS pin must remain high during the t_{RES1} time duration.

When used only to obtain the Device ID while not in the power-down state, the instruction is initiated by driving the /CS pin low and shifting the instruction code “ABh” followed by 3-dummy bytes. The Device ID bits are then shifted out on the falling edge of CLK with most significant bit (MSB) first. The Device ID values for the W25Q SERIALS are listed in Manufacturer and Device Identification table. The Device ID can be read continuously. The instruction is completed by driving /CS high.

When used to release the device from the power-down state and obtain the Device ID, the instruction is the same as previously described, and shown in Figure 6.4.40c & d, except that after /CS is driven high, it must remain high for a time duration of t_{RES2} (See AC Characteristics). After this time duration, the device will resume normal operation, and other instructions will be accepted. If the Release from Power-down / Device ID instruction is issued while an Erase, Program or Write cycle is in process (when BUSY equals 1), the instruction is ignored and will not have any effect on the current cycle.

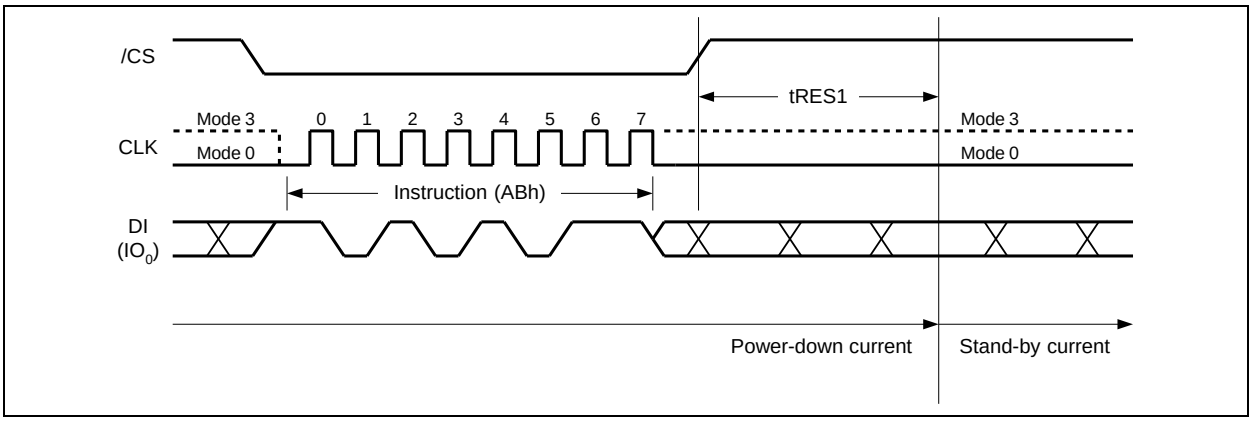

Figure 6.4.40a. Release Power-down Instruction (SPI Mode)

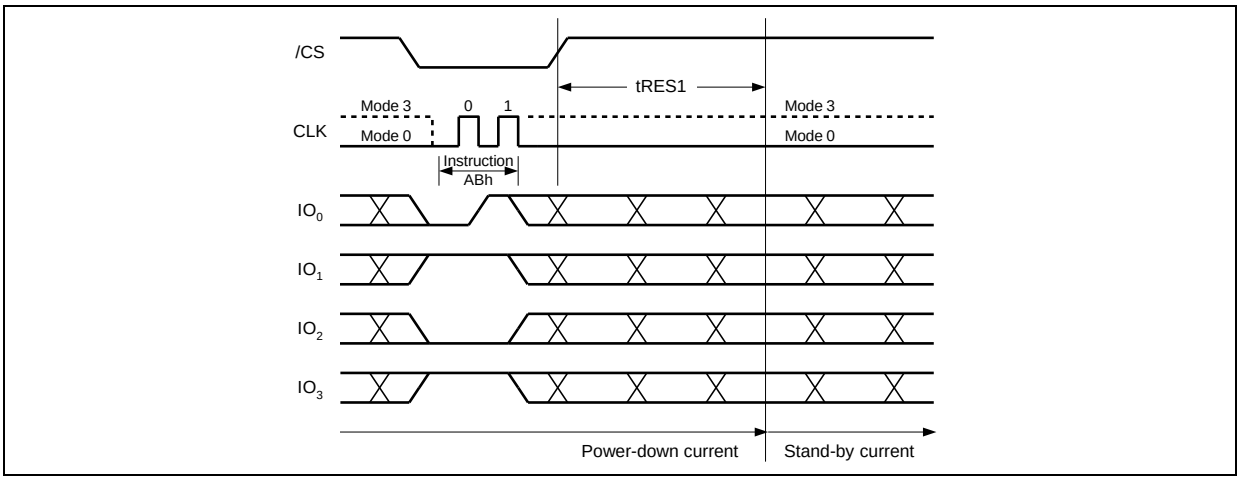

Figure 6.4.40b. Release Power-down Instruction (QPI Mode)

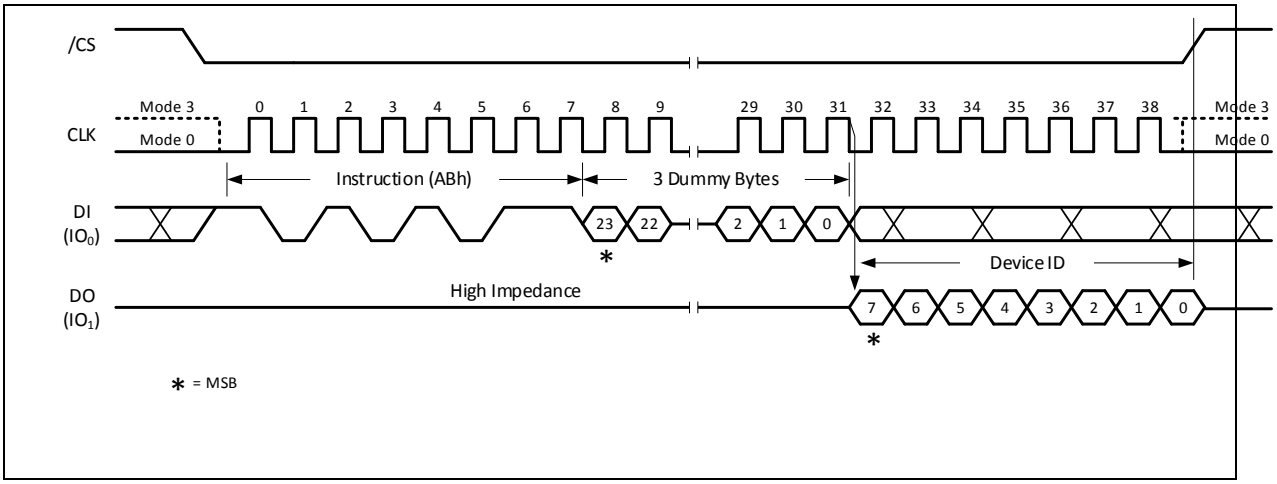

Figure 6.4.40c Device ID Instruction (SPI Mode)

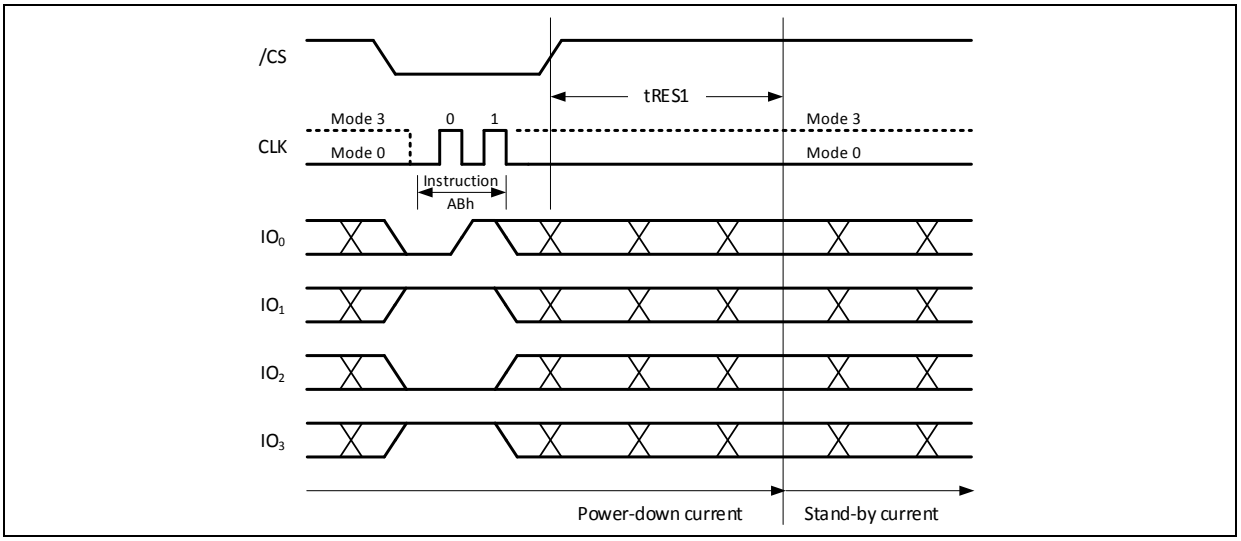

Figure 6.4.40d. Device ID Instruction (QPI Mode)

6.4.41 Read Manufacturer / Device ID (90h)

The Read Manufacturer/Device ID instruction is an alternative to the Release from Power-down / Device ID instruction that provides both the JEDEC assigned manufacturer ID and the specific device ID.

The Read Manufacturer/Device ID instruction is very similar to the Release from Power-down / Device ID instruction. The instruction is initiated by driving the /CS pin low and shifting the instruction code “90h” followed by a 24-bit address (A23-A0) of 000000h. After which, the Manufacturer ID for Winbond (EFh) and the Device ID are shifted out on the falling edge of CLK with the most significant bit (MSB) first as shown in Figure 6.4.41. The Device ID values are listed in Manufacturer and Device Identification table. The instruction is completed by driving /CS high.

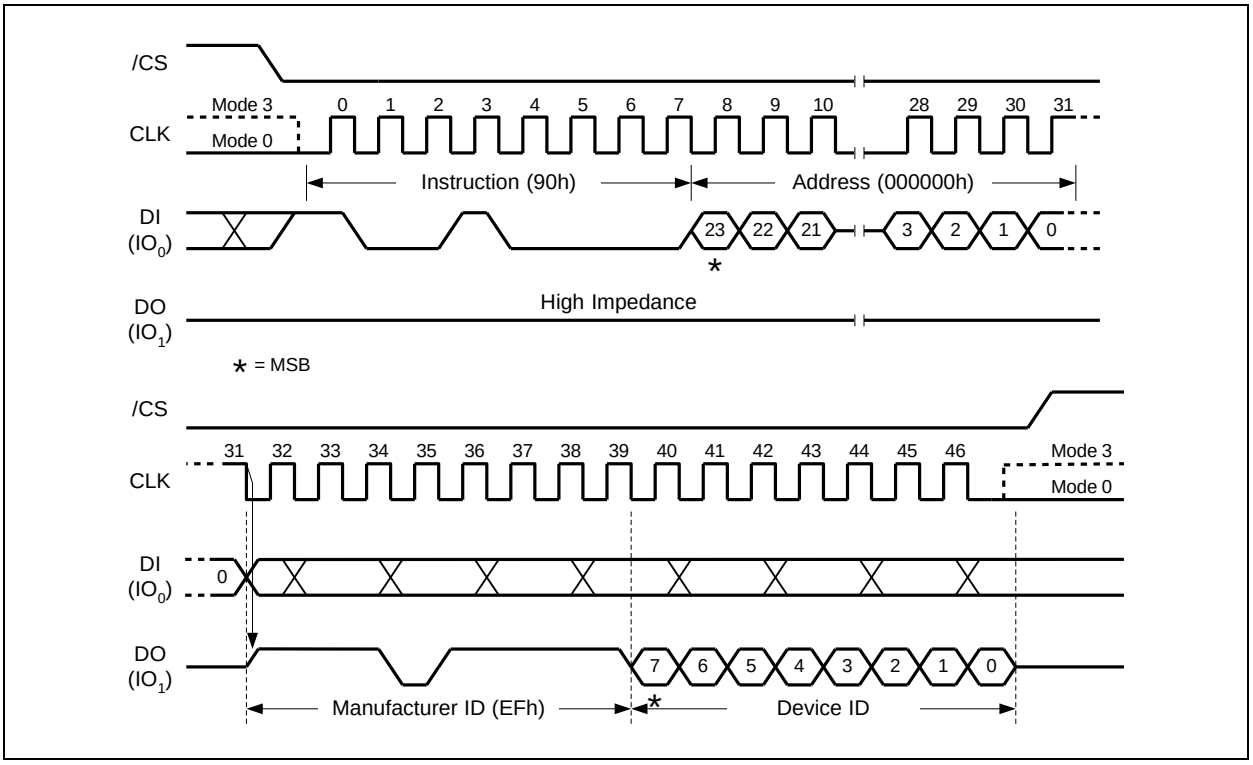

Figure 6.4.41. Read Manufacturer / Device ID Instruction (SPI Mode)

6.4.42 Read Manufacturer / Device ID Dual I/O (92h)

The Read Manufacturer / Device ID Dual I/O instruction is an alternative to the Read Manufacturer / Device ID instruction that provides both the JEDEC assigned manufacturer ID and the specific device ID at 2x speed.

The Read Manufacturer / Device ID Dual I/O instruction is similar to the Fast Read Dual I/O instruction. The instruction is initiated by driving the /CS pin low and shifting the instruction code "92h" followed by a 24/32-bit address (A23/A31-A0) of 000000h, but with the capability to input the Address bits two bits per clock. After which, the Manufacturer ID for Winbond (EFh) and the Device ID are shifted out 2 bits per clock on the falling edge of CLK with most significant bits (MSB) first as shown in Figure 6.4.42. The Device ID values are listed in Manufacturer and Device Identification table. The Manufacturer and Device IDs can be read continuously, alternating from one to the other. The instruction is completed by driving /CS high.

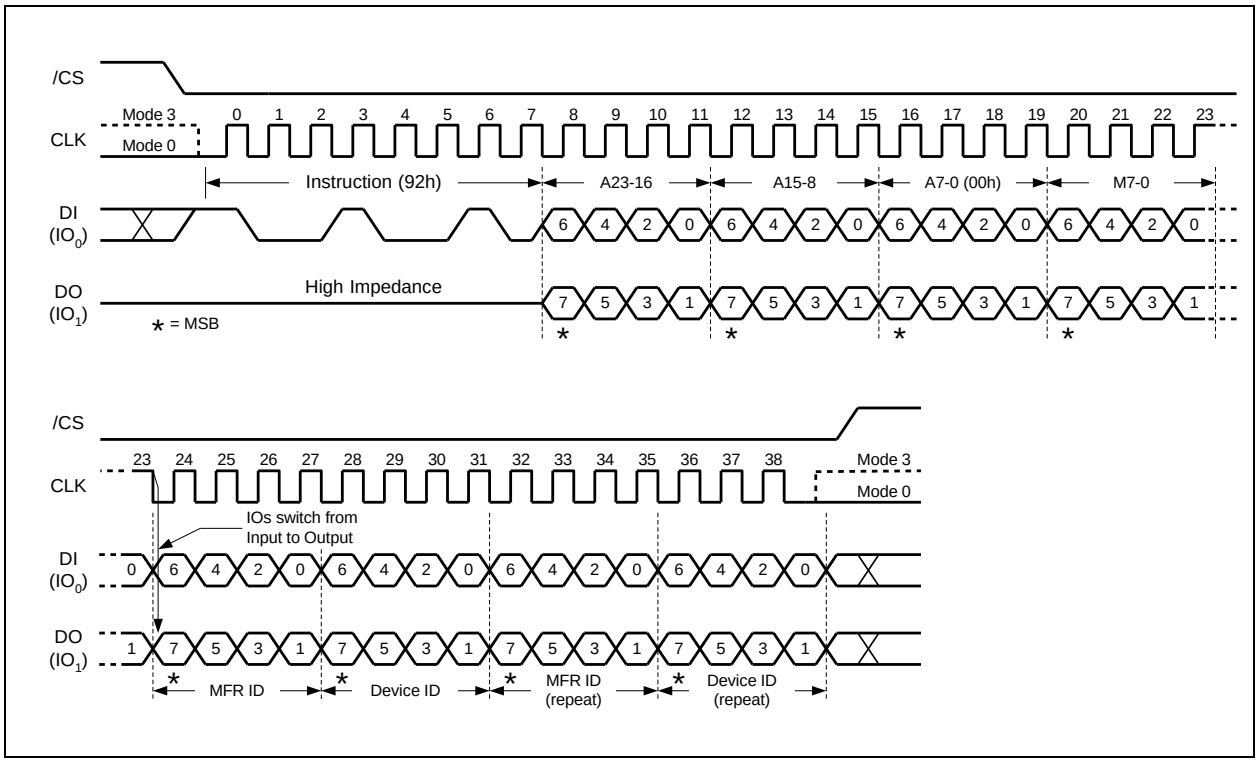

Figure 6.4.42. Read Manufacturer / Device ID Dual I/O Instruction (SPI Mode only)

32-Bit Address is required when the device is operating in 4-Byte Address Mode

Note:

The Read Command Bypass Mode bits M(7-0) must be set to Fxh to be compatible with Fast Read Dual I/O instruction.

6.4.43 Read Manufacturer / Device ID Quad I/O (94h)

The Read Manufacturer / Device ID Quad I/O instruction is an alternative to the Read Manufacturer / Device ID instruction that provides both the JEDEC assigned manufacturer ID and the specific device ID at 4x speed.

The Read Manufacturer / Device ID Quad I/O instruction is similar to the Fast Read Quad I/O instruction. The instruction is initiated by driving the /CS pin low and shifting the instruction code "94h" followed by a four clock dummy cycles and then a 24/32-bit address (A23/A31-A0) of 000000h, but with the capability to input the Address bits four bits per clock. After which, the Manufacturer ID for Winbond (EFh) and the Device ID are shifted out four bits per clock on the falling edge of CLK with the most significant bit (MSB) first as shown in Figure 6.4.43. The Device ID values are listed in the Manufacturer and Device Identification table. The Manufacturer and Device IDs can be read continuously, alternating from one to the other. The instruction is completed by driving /CS high.

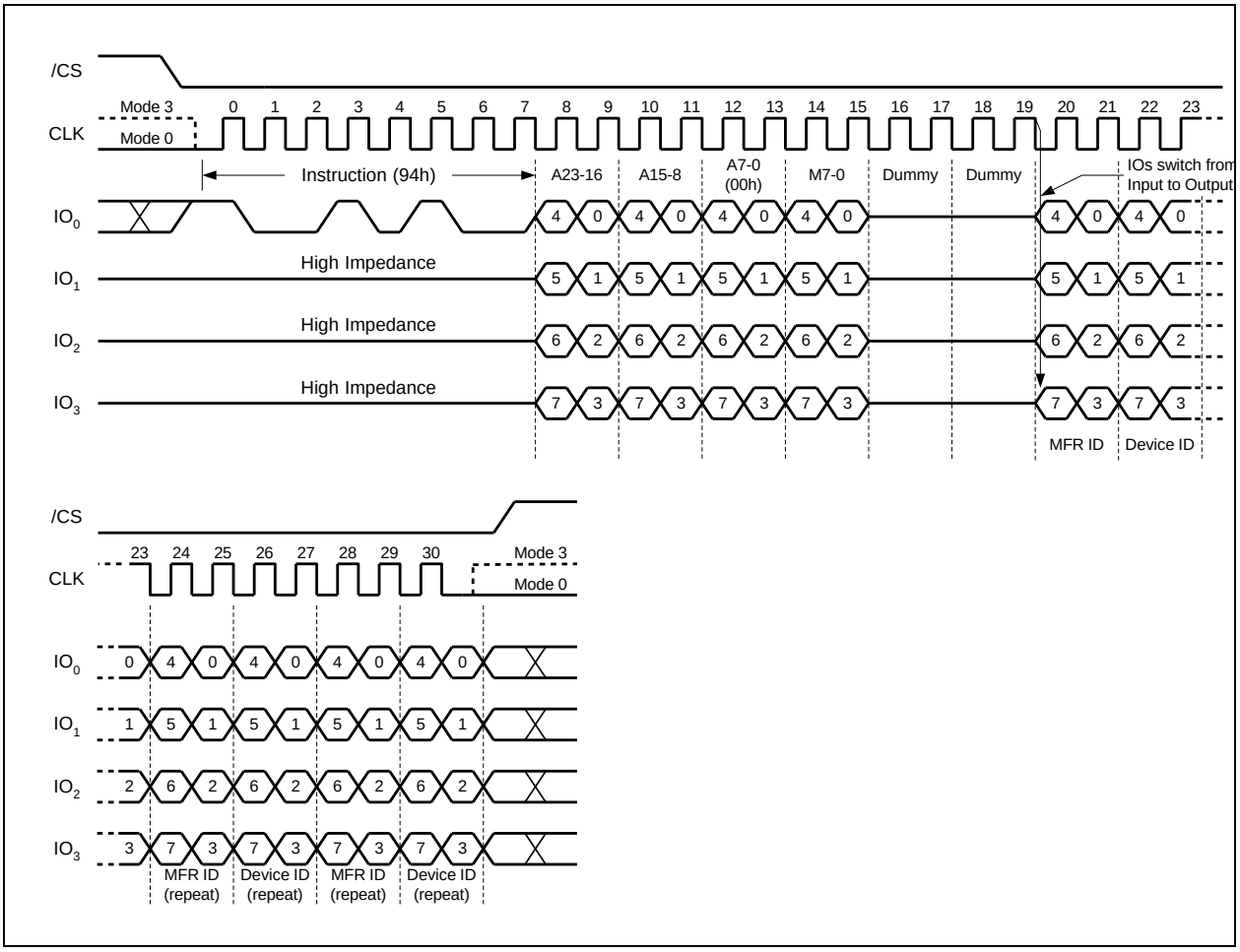

Figure 6.4.43. Read Manufacturer / Device ID Quad I/O Instruction (SPI Mode only)

32-Bit Address is required when the device is operating in 4-Byte Address Mode

Note: The Read Command Bypass Mode bits M(7-0) must be set to Fxh to be compatible with Fast Read Quad I/O instruction.

6.4.44 Read Unique ID Number (4Bh)

The Read Unique ID Number instruction accesses a factory-set read-only 64-bit number that is unique to each device. The ID number can be used in conjunction with user software methods to help prevent copying or cloning of a system. The Read Unique ID instruction is initiated by driving the /CS pin low and shifting the instruction code “4Bh” followed by four bytes of dummy clocks. After which, the 64-bit ID is shifted out on the falling edge of CLK as shown in Figure 6.4.44.

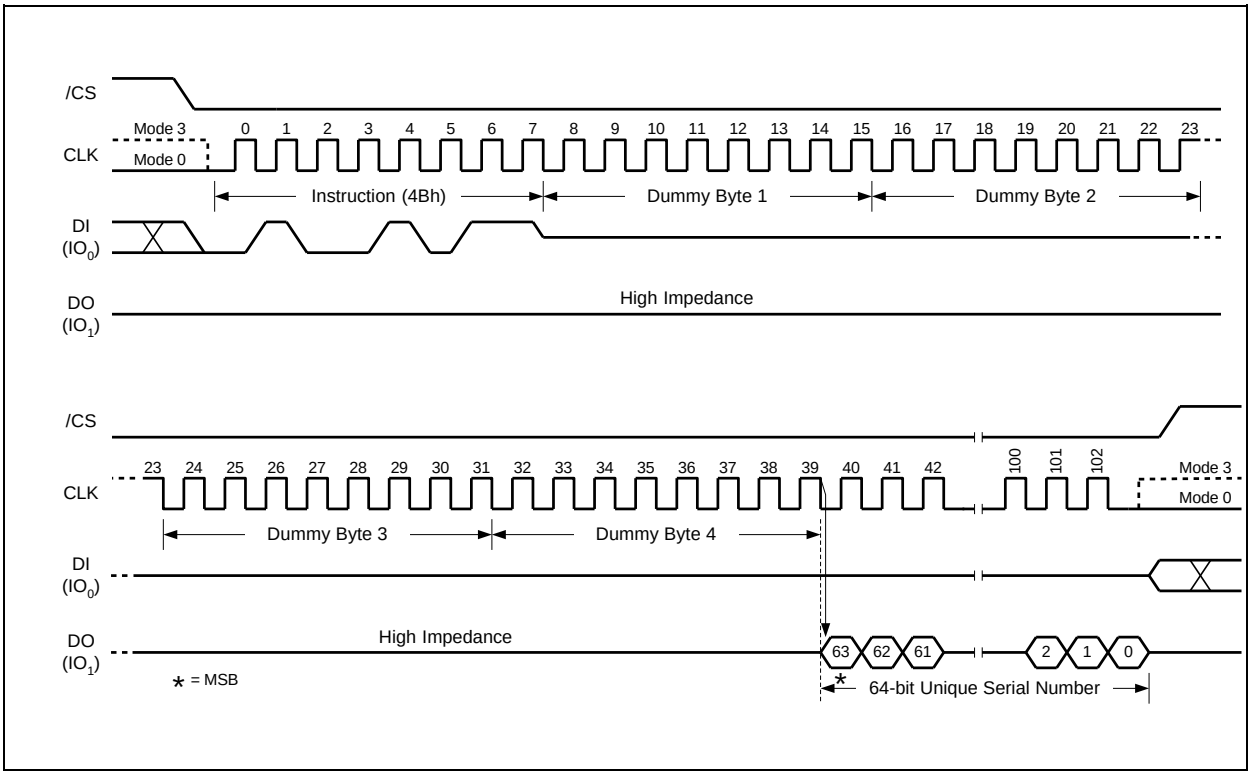

Figure 6.4.44. Read Unique ID Number Instruction (SPI Mode only)

5 Dummy Bytes are required when the device is operating in 4-Byte Address Mode

6.4.45 Read JEDEC ID (9Fh)

For compatibility reasons, the W25QxxRV provides several instructions to electronically determine the identity of the device. The Read JEDEC ID instruction is compatible with the JEDEC standard for SPI compatible serial memories that was adopted in 2003. The instruction is initiated by driving the /CS pin low and shifting the instruction code “9Fh”. The JEDEC assigned Manufacturer ID byte for Winbond (EFh) and two Device ID bytes, Memory Type (ID15-ID8) and Capacity (ID7-ID0) are then shifted out on the falling edge of CLK with the most significant bit (MSB) first as shown in Figure 6.4.45. For memory type and capacity values refer to the Manufacturer and Device Identification table.

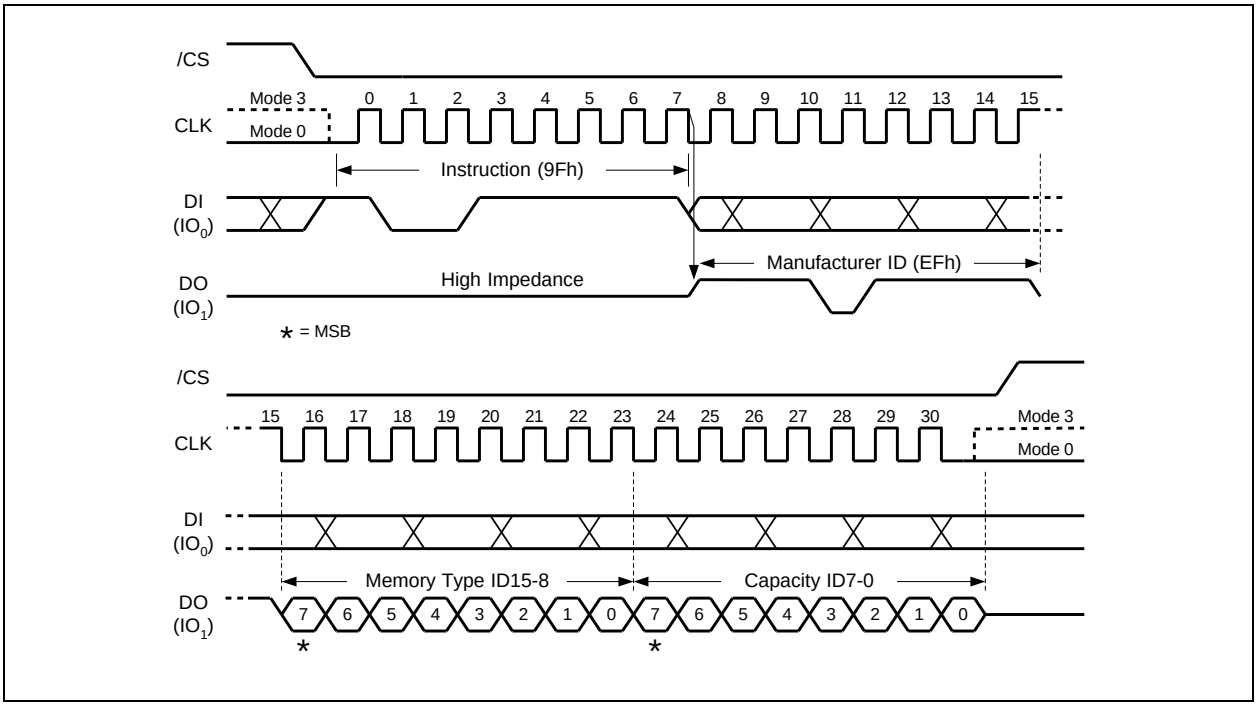

Figure 6.4.45a. Read JEDEC ID Instruction (SPI Mode)

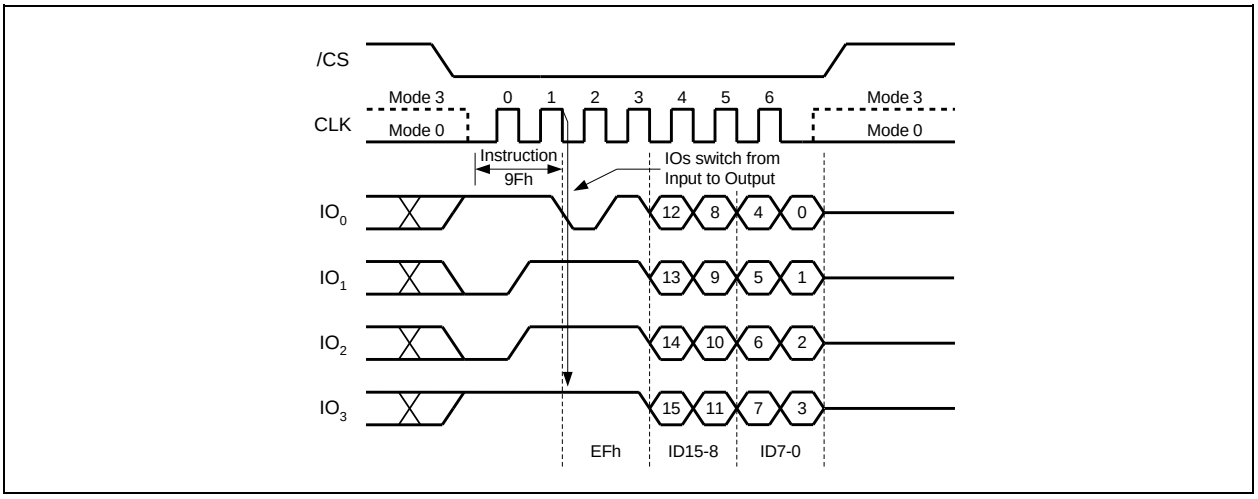

Figure 6.4.45b. Read JEDEC ID Instruction (QPI Mode)

6.4.46 Read SFDP Register (5Ah)

The W25QxxRV features a 256-Byte Serial Flash Discoverable Parameter (SFDP) register that contains information about device configurations, available instructions and other features. The SFDP parameters are stored in one or more Parameter Identification (PID) tables. Currently only one PID table is specified, but more may be added in the future. The Read SFDP Register instruction is compatible with the SFDP standard initially established in 2010 for PC and other applications, as well as the JEDEC standard JESD216-Serials that is published in 2011. Most Winbond SpiFlash Memories shipped after June 2011 (date code 1124 and beyond) support the SFDP feature as specified in the applicable datasheet.

The Read SFDP instruction is initiated by driving the /CS pin low and shifting the instruction code "5Ah" followed by a 24-bit address (A23-A0)(1) into the DI pin. Eight "dummy" clocks are also required before the SFDP register contents are shifted out on the falling edge of the 40th CLK with most significant bit (MSB) first as shown in Figure 6.4.46. For SFDP register values and descriptions, please refer to the Winbond Application Note for SFDP Definition Table.

Note: 1. A23-A8 = 0; A7-A0 are used to define the starting byte address for the 256-Byte SFDP Register.

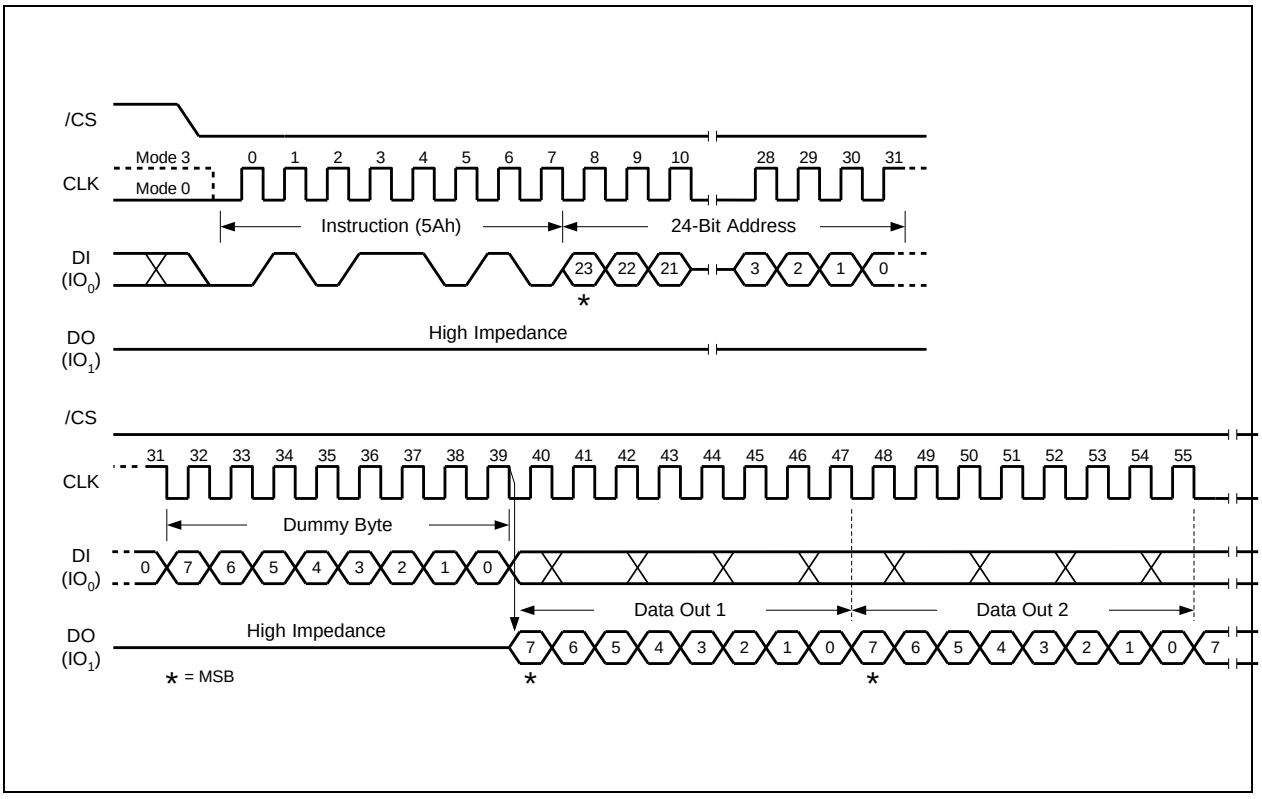

Figure 6.4.46. Read SFDP Register Instruction Sequence Diagram (SI Mode only)

Only 24-Bit Address is required when the device is operating in either 3-Byte or 4-Byte Address Mode

Read SFDP Register (5Ah) in QPI Mode

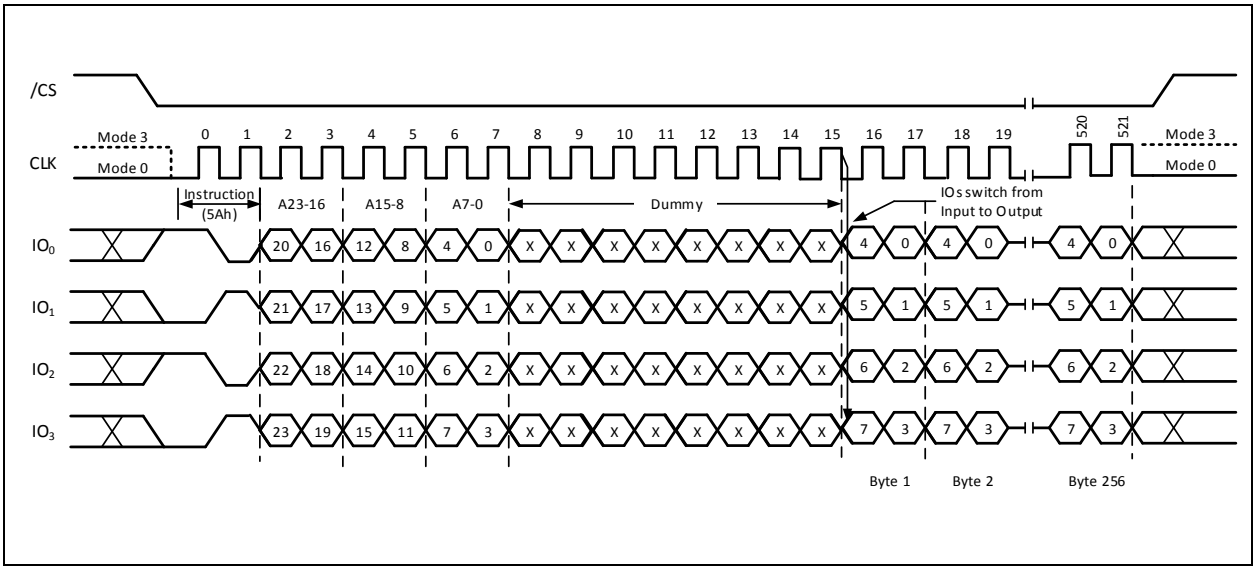

Figure 6.4.46. Read SFDP Register Instruction Sequence Diagram (QPI Mode only)

Only 24-Bit Address is required when the device is operating in either 3-Byte or 4-Byte Address Mode

6.4.47 Erase Security Registers (44h)

The W25QxxRV offers three 256-byte Security Registers which can be erased and programmed individually. These registers may be used by the system manufacturers to store security and other important information separately from the main memory array.

The Erase Security Register instruction is similar to the Sector Erase instruction. A Write Enable instruction must be executed before the device will accept the Erase Security Register Instruction (Status Register bit WEL must equal 1). The instruction is initiated by driving the /CS pin low and shifting the instruction code "44h" followed by a 24/32-bit address (A23/A31-A0) to erase one of the three security registers.

ADDRESS	{A23/A31}-16	A15-12	A11-8	A7-0
Security Register #1	00h/0000h	0 0 0 1	0 0 0 0	Don't Care
Security Register #2	00h/0000h	0 0 1 0	0 0 0 0	Don't Care
Security Register #3	00h/0000h	0 0 1 1	0 0 0 0	Don't Care

The Erase Security Register instruction sequence is shown in Figure 6.4.47. The /CS pin must be driven high after the eighth bit of the last byte has been latched. If this is not done, the instruction will not be executed. After /CS is driven high, the self-timed Erase Security Register operation will commence for a time duration of t_{SE} (See AC Characteristics). While the Erase Security Register cycle is in progress, the Read Status Register instruction may still be accessed for checking the status of the BUSY bit. The BUSY bit is a 1 during the erase cycle and becomes a 0 when the cycle is finished, and the device is ready to accept other instructions again. After the Erase Security Register cycle has finished, the Write Enable Latch (WEL) bit in the Status Register is cleared to 0. The Security Register Lock Bits (LB[3:1]) in the Status Register-2 can be used to OTP protect the security registers. Once a lock bit is set to 1, the corresponding security register will be permanently locked, and the Erase Security Register instruction to that register will be ignored (Refer to the link "5.3.10 Security Register Lock Bits (LB3, LB2, LB1, SFDP Lock) –Non-Volatile *OTP Writable*").

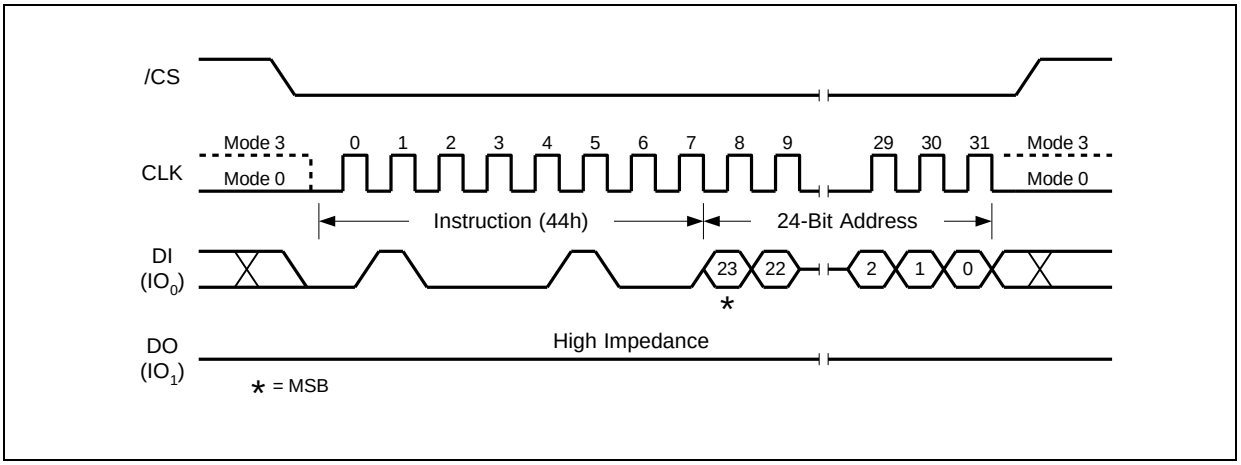

Figure 6.4.47. Erase Security Registers Instruction (SPI Mode only)

32-Bit Address is required when the device is operating in 4-Byte Address Mode

6.4.48 Program Security Registers (42h)

The Program Security Register instruction is similar to the Page Program instruction. It allows from one byte to 256 bytes of security register data to be programmed at previously erased (FFh) memory locations. A Write Enable instruction must be executed before the device will accept the Program Security Register Instruction (Status Register bit WEL= 1). The instruction is initiated by driving the /CS pin low then shifting the instruction code “42h” followed by a 24/32-bit address (A23/A31-A0) and at least one data byte, into the DI pin. The /CS pin must be held low for the entire length of the instruction while data is being sent to the device.

ADDRESS	{A23/A31}-16	A15-12	A11-8	A7-0
Security Register #1	00h/0000h	0 0 0 1	0 0 0 0	Byte Address
Security Register #2	00h/0000h	0 0 1 0	0 0 0 0	Byte Address
Security Register #3	00h/0000h	0 0 1 1	0 0 0 0	Byte Address

The Program Security Register instruction sequence is shown in Figure 6.4.48. The Security Register Lock Bits (LB[3:1]) in the Status Register-2 can be used to OTP protect the security registers. Once a lock bit is set to 1, the corresponding security register will be permanently locked, Program Security Register instruction to that register will be ignored (See 7.1.8 for detail descriptions).

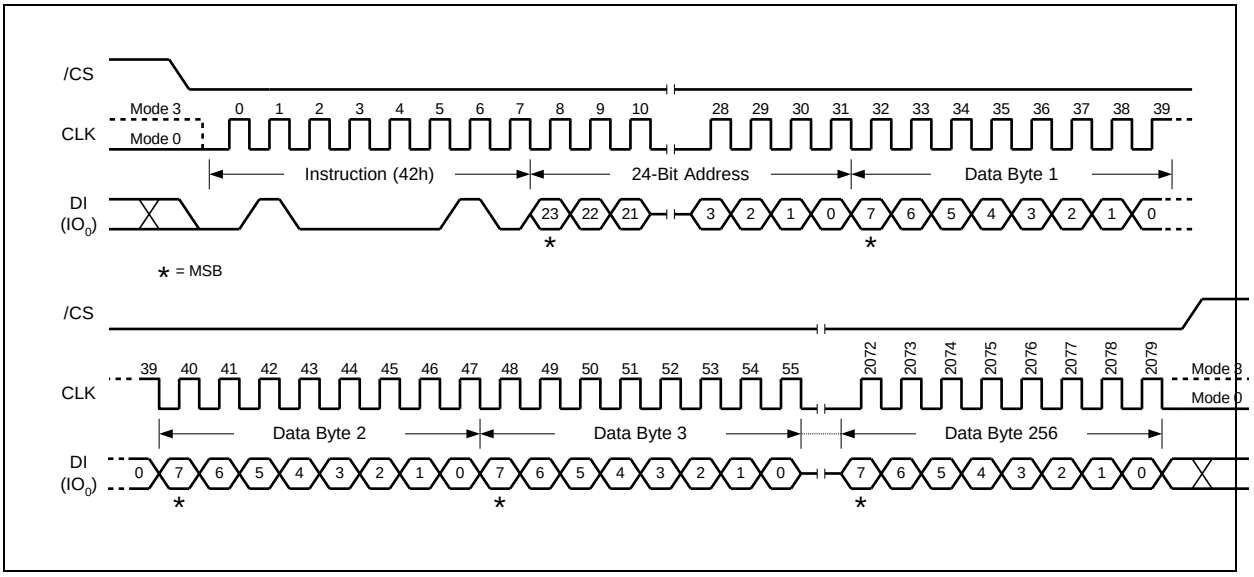

Figure 6.4.48. Program Security Registers Instruction (SPI Mode only)

32-Bit Address is required when the device is operating in 4-Byte Address Mode

6.4.49 Read Security Registers (48h)

The Read Security Register instruction is similar to the Fast Read instruction and allows one or more data bytes to be sequentially read from one of the three security registers. The instruction is initiated by driving the /CS pin low and then shifting the instruction code “48h” followed by a 24/32-bit address (A23/A31-A0) and eight “dummy” clocks into the DI pin. The code and address bits are latched on the rising edge of the CLK pin. After the address is received, the data byte of the addressed memory location will be shifted out on the DO pin at the falling edge of CLK with most significant bit (MSB) first. The byte address is automatically incremented to the next byte address after each byte of data is shifted out. Once the byte address reaches the last byte of the register (byte address FFh), it will reset to address 00h, the first byte of the register, and continue to increment. The instruction is completed by driving /CS high. The Read Security Register instruction sequence is shown in Figure 6.4.48. If a Read Security Register instruction is issued while an Erase, Program or Write cycle is in process (BUSY=1), the instruction is ignored and will not have any effect on the current cycle. The Read Security Register instruction allows clock rates from D.C. to a maximum of FR (see AC Electrical Characteristics).

ADDRESS	{A23/A31}-16	A15-12	A11-8	A7-0
Security Register #1	00h/0000h	0 0 0 1	0 0 0 0	Byte Address
Security Register #2	00h/0000h	0 0 1 0	0 0 0 0	Byte Address
Security Register #3	00h/0000h	0 0 1 1	0 0 0 0	Byte Address

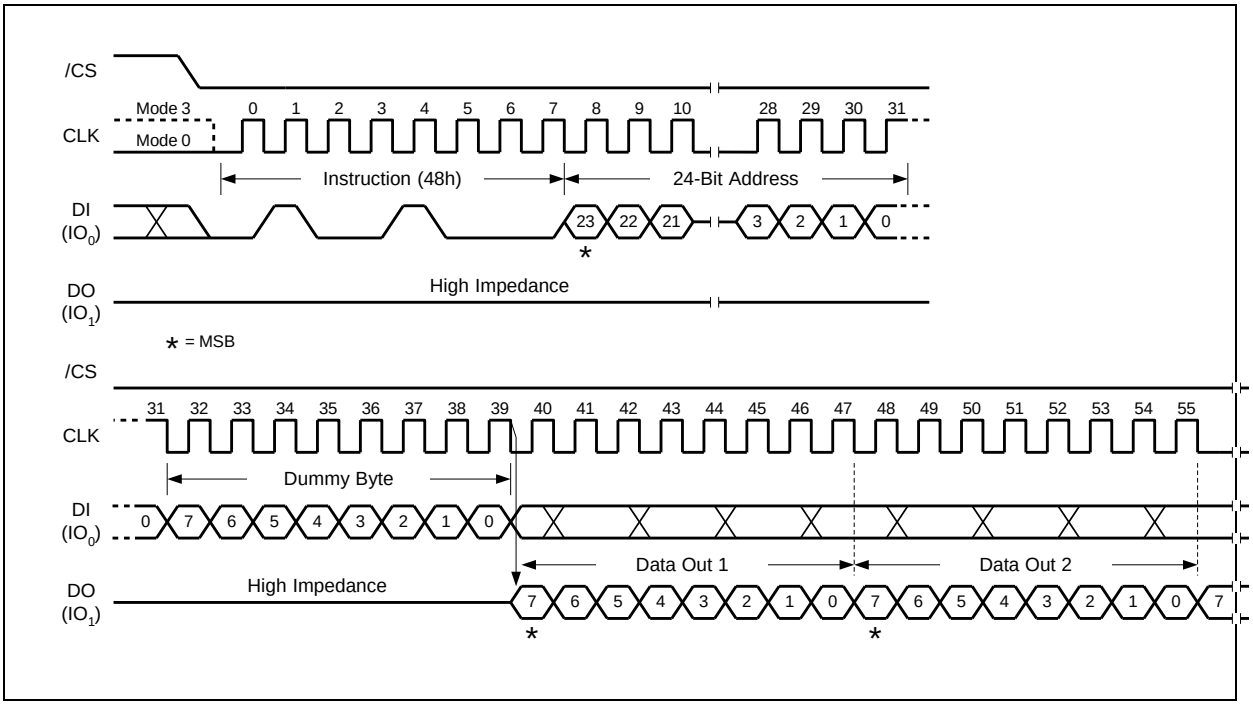

Figure 6.4.49. Read Security Registers Instruction (SPI Mode only)

32-Bit Address is required when the device is operating in 4-Byte Address Mode

6.4.50 Set Read Parameters (C0h)

The “Set Read Parameters (C0h)” instruction is used to accommodate a wide range of applications with different needs for either maximum read frequency or minimum data access latency. This is accomplished by setting the number of dummy clocks and wrap length configurations for set of selected instructions. Set Read Parameters (C0h) instruction writes to the Read Parameter Register (P[7:0]). P[6:4] bits is the dummy clocks configuration, while P[1:0] bits is the wrap length configuration for QPI mode only.

In SPI mode, SPI Set Read Parameters (C0h)" instruction writes to ‘Dummy Clocks’ P[6:4] bits only, while it will ignore ‘Wrap Length’ P[1:0] bits input as they are don’t care in SPI mode. Conversely, QPI Set Read Parameters instruction will write both to the P[6:4] and P[1:0] Read Parameter bits. The Set Read Parameters instruction sequence is shown in Figure 6.4.50.

Set Read Parameters instruction (SPI or QPI or DTR) is used to configure **the number of dummy cycles** through P[6:4] Read Parameter bits for the following SPI, QPI, SPI DTR, and QPI DTR instructions:

- **Standard SPI mode:**
  Fast Read Quad I/O (EBh)
  Fast Read Quad I/O with 4-Byte Address (ECh)

- **QPI mode:**
  Fast Read (0Bh)
  Read Checksum (9Ch)
  Fast Read Quad I/O (EBh)
  Burst Read with Wrap (0Ch)
  Fast Read Quad I/O with 4-Byte Address (ECh)

  SPI DTR mode:
  DTR Fast Read Quad I/O (EDh)
  DTR Fast Read Quad I/O with 4-Byte Address (EEh)

- **QPI DTR mode:**
  DTR Fast Read (0Dh)
  DTR Burst Read with Wrap (0Eh)
  DTR Fast Read Quad I/O (EDh)
  DTR Fast Read Quad I/O with 4-Byte Address (EEh)

In QPI mode only, Set Read Parameters instruction to P[1:0] Read Parameter bits is used to configure the “**Wrap Length**” for the following QPI and QPI DTR read with wrap instructions:

- **QPI mode:**
  Burst Read with Wrap (0Ch) instruction

- **QPI DTR mode:**
  DTR Burst Read with Wrap (0Eh) instruction.

The Wrap bits (Set Burst with Wrap ‘77h’) as well as Read Parameter bits P[7:0] setting will remain unchanged when the device is switched from Standard SPI mode to QPI mode or vice versa. It is very important that the required dummy cycles and wrap length are set properly before executing the SPI (EBh, ECh), QPI (0Bh, 9Ch, 0Ch, EBh, ECh), SPI DTR (EDh, EEh), and QPI DTR (0Dh, EDh, 0Eh, EEh) instructions.

The default Parameter Read “Dummy Clocks” and “Wrap Length“ settings for selected SPI, QPI, DTR, and QPI DTR read instructions after power up or reset are defined in the tables below. After power up or reset, Read Parameter bits are reset to 00h. Detailed Read Parameter bits configuration are also shown below.

QPI/QPI DTR Wrap Length: QPI: 0Ch /QPI DTR: 0Eh

P1 – P0	WRAP LENGTH (QPI: 0Ch ; QPI DTR: 0Eh)
0 0	8-byte[1]
0 1	16-byte
1 0	32-byte
1 1	64-byte

Dummy Clocks and Wrap Length Configurations

SPI/QPI Dummy Clocks*:* SPI: EBh/ECh or QPI: 0Bh/EBh/0Ch/ECh/9Ch- *W25Q33RV/64RV/12RV*

SPI / QPI		QPI		QPI		SPI / QPI	
Address Mode		Fast Read /Read Checksum		Burst Read With Wrap		Fast Read Quad I/O	
3-/4-byte Address		0Bh / 9Ch		x		EBh[2]	
Fixed 4-byte Address		X		0Ch		ECh [2]	
Starting Address[1]		Aligned	Any	Aligned	Any	Aligned	Any
Dummy Cycle	6(Def.)[3]	133	104	133	104	133	104
	8	133	104	133	104	133	104
	10	133	104	133	104	133	104
	12–16	166	133	166	133	166	133

DTR Dummy Clocks: SPI DTR: EDh/EEh and QPI DTR: 0Dh/0Eh/EDh/EEh- *W25Q33RV/64RV/12RV*

SPI_DTR / QPI_DTR		QPI_DTR		QPI_DTR		SPI_DTR / QPI_DTR	
Address Mode		Fast Read		Burst Read With Wrap		Fast Read Quad I/O	
3-/4-byte Address Mode		0Dh		0Eh		EDh[2]	
Fixed 4-byte Address		X		X		EEh[2]	
Starting Address[1]		Aligned	Any	Aligned	Any	Aligned	Any
Dummy Cycle	8(Def.)[3]	84	66	84	66	84	66
	10	84	66	84	66	84	66
	12–16	104	84	104	84	104	84

Notes:

1. Aligned: 4-bytes address alignment for Read, read address start from A1,A0=0,0.
   Any: no alignment requirements; reads may begin at any address.
2. EB, ECh, EDh and EEh support “Read Command Bypass Mode”. When the M7–M0 is set to Fxh, Read Command Bypass Mode is disabled, and M7–M0 is treated as the dummy-cycle field.
3. Default from power up

SPI/QPI Dummy Clocks: SPI: EBh/ECh or QPI: 0Bh/EBh/0Ch/ECh/9Ch- *W25Q25/51RV/01RV/02RV*

SPI / QPI		QPI		QPI		SPI / QPI	
Address Mode		**Fast Read /Read Checksum**		**Burst Read With Wrap**		**Fast Read Quad I/O**	
3-/4-byte Address		0Bh / 9Ch		x		EBh(2)	
Fixed 4-byte Address		X		0Ch		ECh(2)	
Starting Address(1)		Aligned	Any	Aligned	Any	Aligned	Any
Dummy Cycle	6(Def.)(3)	104	66	104	66	104	66
	8	133	66	133	66	133	66
	10	133	66	133	66	133	66
	12–16	133	84	133	84	133	84

DTR Dummy Clocks: SPI DTR: EDh/EEh and QPI DTR: 0Dh/0Eh/EDh/EEh- *W25Q25/51RV/01RV/02RV*

SPI_DTR / QPI_DTR		QPI_DTR		QPI_DTR		SPI_DTR / QPI_DTR	
Address Mode		**Fast Read**		**Burst Read With Wrap**		**Fast Read Quad I/O**	
3-/4-byte Address Mode		0Dh		0Eh		EDh(2)	
Fixed 4-byte Address		X		X		EEh(2)	
Starting Address(1)		Aligned	Any	Aligned	Any	Aligned	Any
Dummy Cycle	8(Def.)(3)	84	50	84	50	84	50
	10	104	50	104	50	84	50
	12–16	104	66	104	66	104	66

Notes:

1. Aligned: 4-bytes address alignment for Read, read address start from A1,A0=0,0.
   Any: no alignment requirements; reads may begin at any address.
2. EDh and EEh support "Read Command Bypass Mode". When the M7–M0 is set to Fxh, Read Command Bypass Mode is disabled, and M7–M0 is treated as the dummy-cycle field.
3. Default from power up

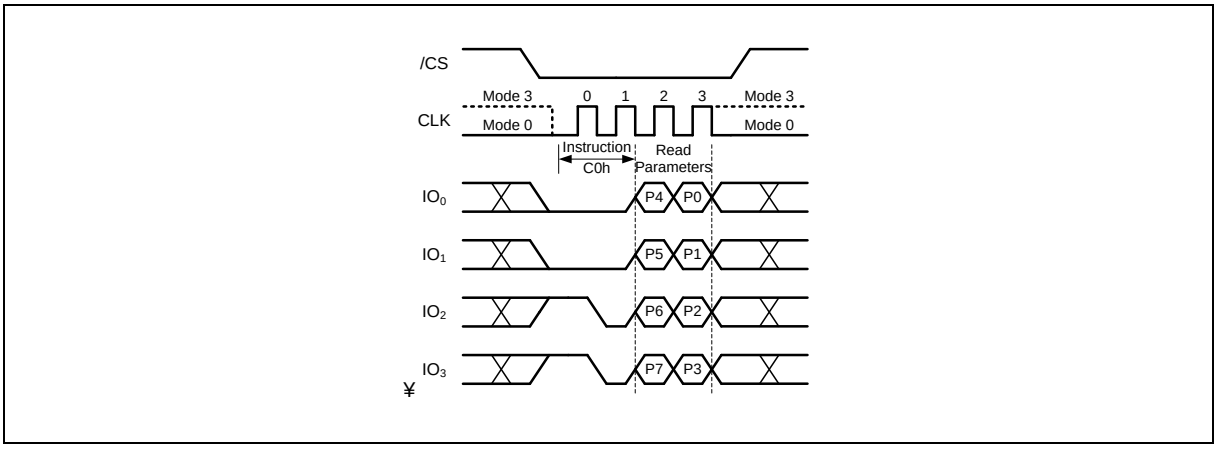

Figure 6.4.50a. Set Read Parameters (C0h) Instruction for QPI Mode

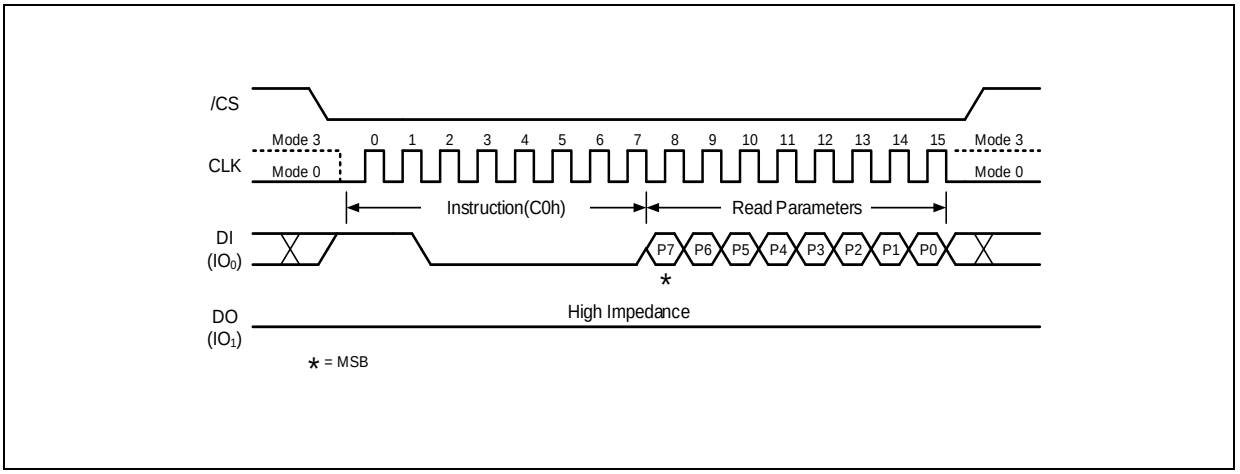

Figure *6.4.50b*. Set Read Parameters (C0h) Instruction for SPI Mode

***** SPI Set Read Parameters(C0h) instruction writes to "Dummy Clock" P[6:4] bit only. It will ignore Warp Length P[0:1] bits input was they are don't care in SPI mode.

6.4.51 Burst Read with Wrap (0Ch)

The “Burst Read with Wrap (0Ch)” instruction provides an alternative way to perform the read operation with “Wrap Around” in QPI mode. The instruction is similar to the “Fast Read (0Bh)” instruction in QPI mode, except the addressing of the read operation will “Wrap Around” to the beginning boundary of the “Wrap Length” once the ending boundary is reached.

The “Wrap Length” and the number of dummy clocks can be configured by the “Set Read Parameters (C0h)” instruction.

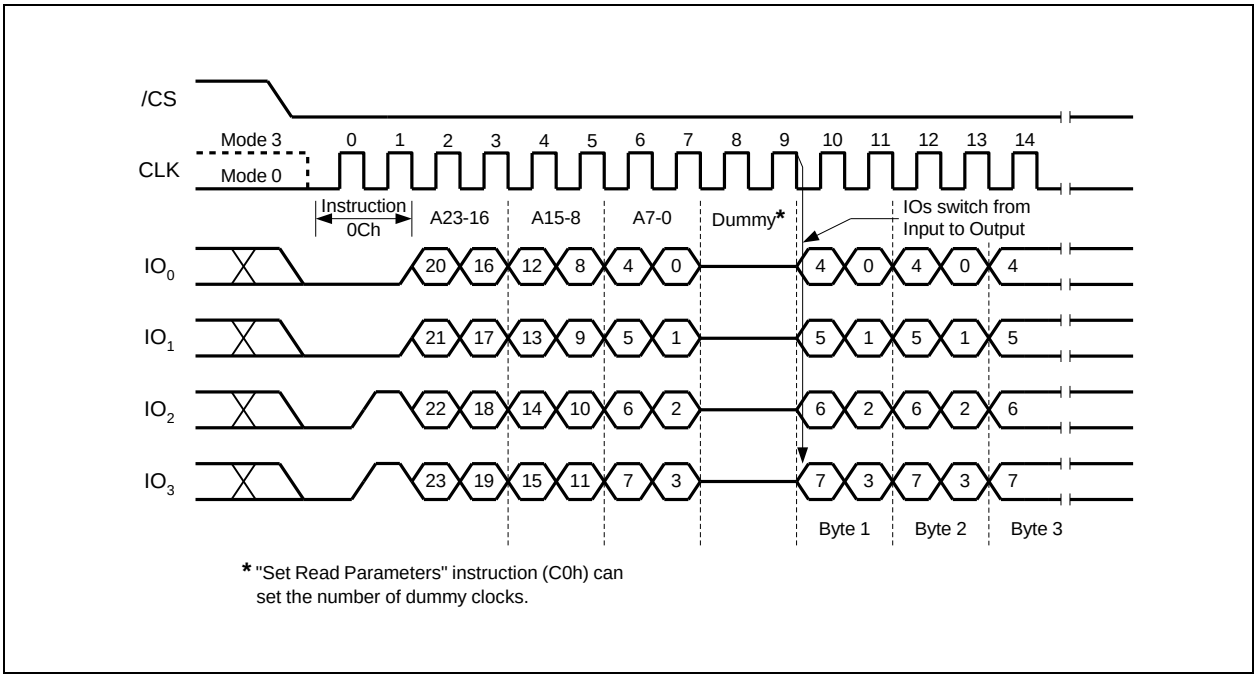

Figure6.4.51. Burst Read with Wrap Instruction (QPI Mode only)

32-Bit Address is required when the device is operating in 4-Byte Address Mode

6.4.52 DTR Burst Read with Wrap (0Eh)

The “DTR Burst Read with Wrap (0Eh)” instruction provides an alternative way to perform the read operation with “Wrap Around” in QPI mode. The instruction is similar to the “Fast Read (0Bh)” instruction in QPI mode, except the addressing of the read operation will “Wrap Around” to the beginning boundary of the “Wrap Length” once the ending boundary is reached.

The “Wrap Length” can be configured by the “Set Read Parameters (C0h)” instruction.

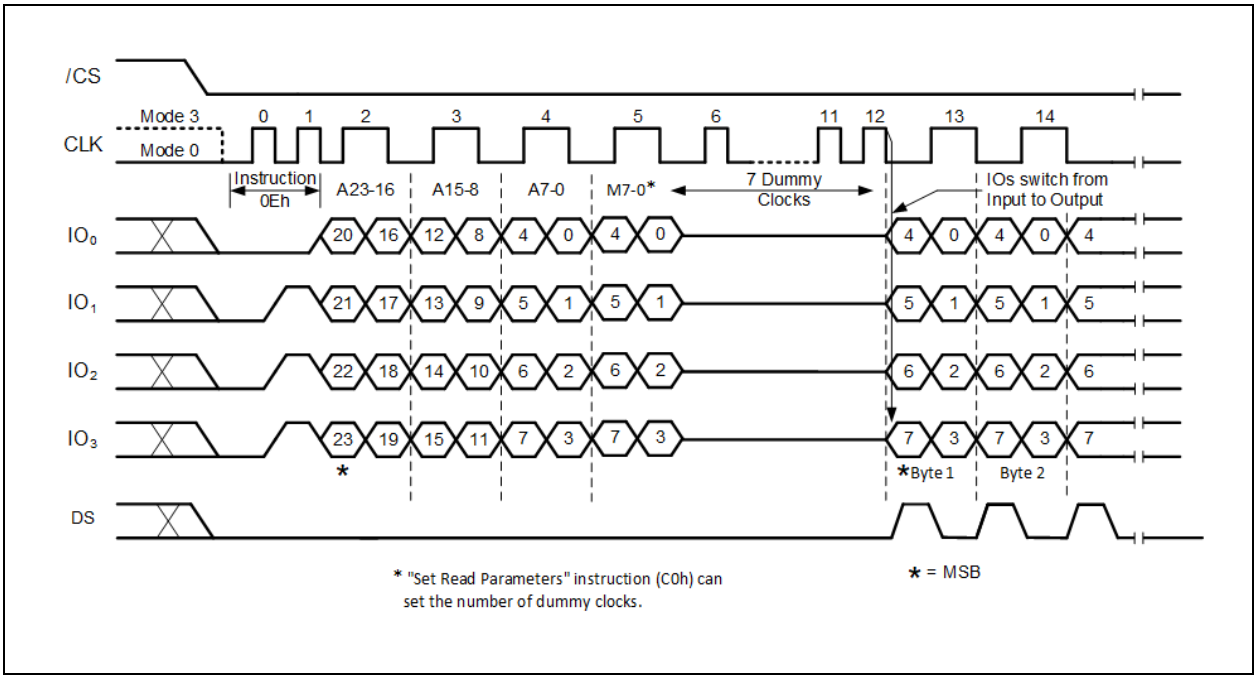

Figure 6.4.52. DTR Burst Read with Wrap Instruction (QPI Mode only)

32-Bit Address is required when the device is operating in 4-Byte Address Mode

6.4.53 Enter QPI Mode (38h)

The W25QxxRV supports both Standard/Dual/Quad Serial Peripheral Interface (SPI) and Quad Peripheral Interface (QPI). However, SPI mode and QPI mode cannot be used at the same time. “Enter QPI (38h)” instruction is the only way to switch the device from SPI mode to QPI mode.

Upon power-up, the default state of the device upon is Standard/Dual/Quad SPI mode. This provides full backward compatibility with earlier generations of Winbond serial flash memories. See Instruction Set Table 1-4 & 7-8 for all supported SPI commands. In order to switch the device to QPI mode, the Quad Enable (QE) bit in Status Register-2 must be set to 1 first, and an “Enter QPI (38h)” instruction must be issued. If the Quad Enable (QE) bit is 0, the “Enter QPI (38h)” instruction will be ignored, and the device will remain in SPI mode.

Refer to the QPI Instruction Set Table, sections link “6.2.6-6.2.10” & “6.2.13- 6.2.15”for all the commands supported in QPI/QPI DTR Security Register Lock Bits (LB3, LB2, LB1, SFDP Lock) –Non-Volatile *OTP Writable* mode.

When the device is switched from SPI mode to QPI mode, the existing Write Enable and Program/Erase Suspend status, and the Wrap Length setting will remain unchanged.

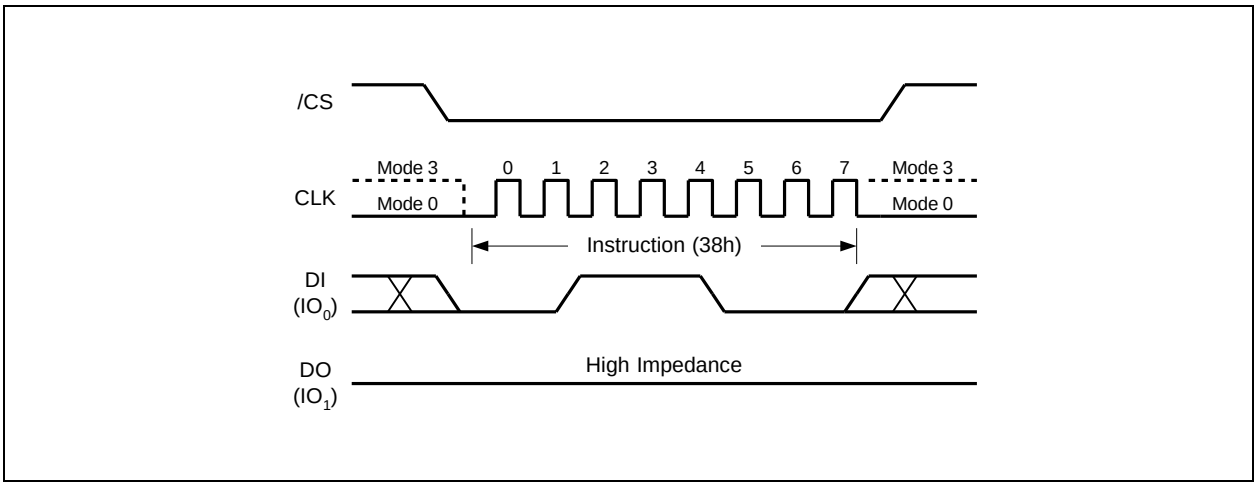

Figure 6.4.53. Enter QPI Instruction (SPI Mode only)

6.4.54 Exit QPI Mode (FFh)

In order to exit the QPI mode and return to the Standard/Dual/Quad SPI mode, an “Exit QPI (FFh)” instruction must be issued.

When the device is switched from QPI mode to SPI mode, the existing Write Enable Latch (WEL) and Program/Erase Suspend status, and the Wrap Length setting will remain unchanged.

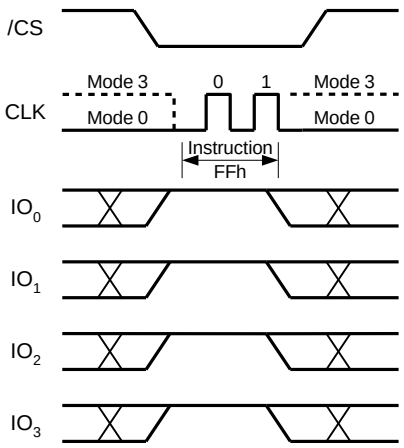

Figure 6.4.54. Exit QPI Instruction (QPI Mode only)

6.4.55 Flex Block/Sector Lock (36h)

The Flex Block/Sector Lock provides an alternative way to protect the memory array from adverse Erase/Program. The Flex Block/Sector Lock bits are volatile bits.

To lock a specific block or sector as illustrated in Figure 6.2.55a, a Flex Block/Sector Lock command must be issued by driving /CS low, shifting the instruction code “36h” into the Data Input (DI) pin on the rising edge of CLK, followed by a 24/32-bit address and then driving /CS high. A Write Enable instruction must be executed before the device will accept the Flex Block/Sector Lock Instruction (Status Register bit WEL= 1).

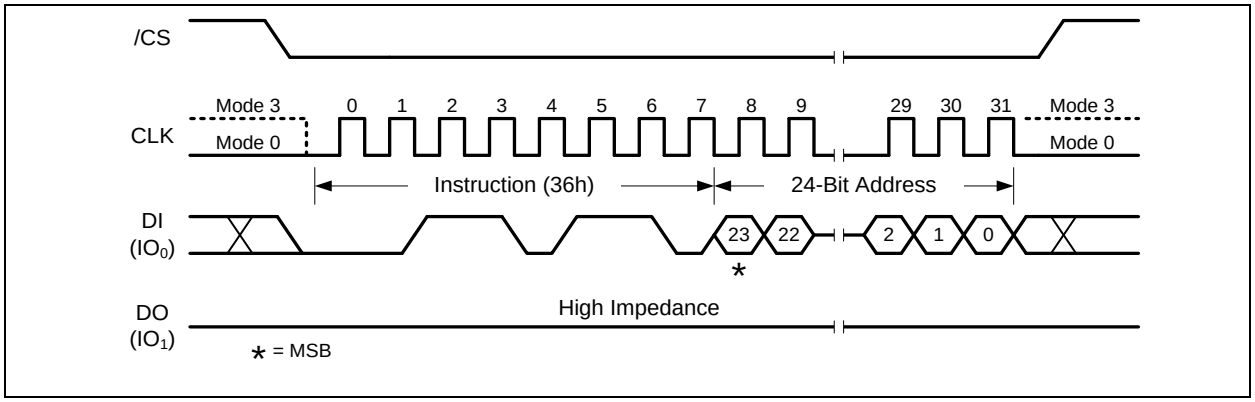

Figure 6.4.55a. Flex Block/Sector Lock Instruction (SPI Mode)

32-Bit Address is required when the device is operating in 4-Byte Address Mode

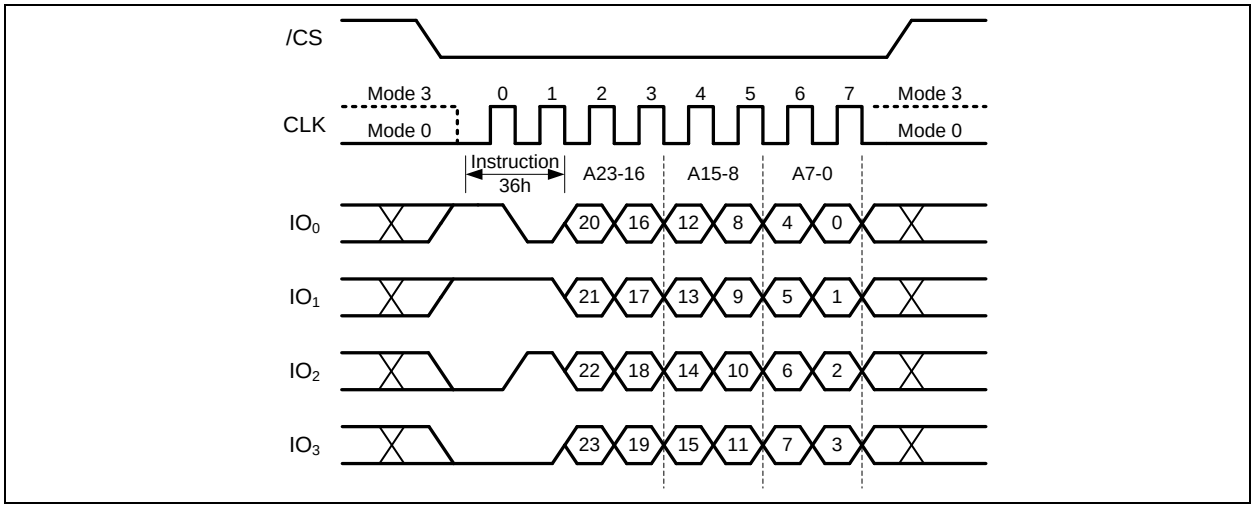

Figure 6.4.55b. Flex Block/Sector Lock Instruction (QPI Mode)

32-Bit Address is required when the device is operating in 4-Byte Address Mode

6.4.56 Flex Block/Sector Unlock (39h)

The Flex Block/Sector Lock provides an alternative way to protect the memory array from adverse Erase/Program operations. The Flex Block/Sector Lock bits are volatile bits.

To unlock a specific block or sector as illustrated in Figure 6.4.56, a Flex Block/Sector Unlock command must be issued by driving /CS low, shifting the instruction code “39h” into the Data Input (DI) pin on the rising edge of CLK, followed by a 24/32-bit address and then driving /CS high. A Write Enable instruction must be executed before the device will accept the Flex Block/Sector Lock Instruction (Status Register bit WEL= 1).

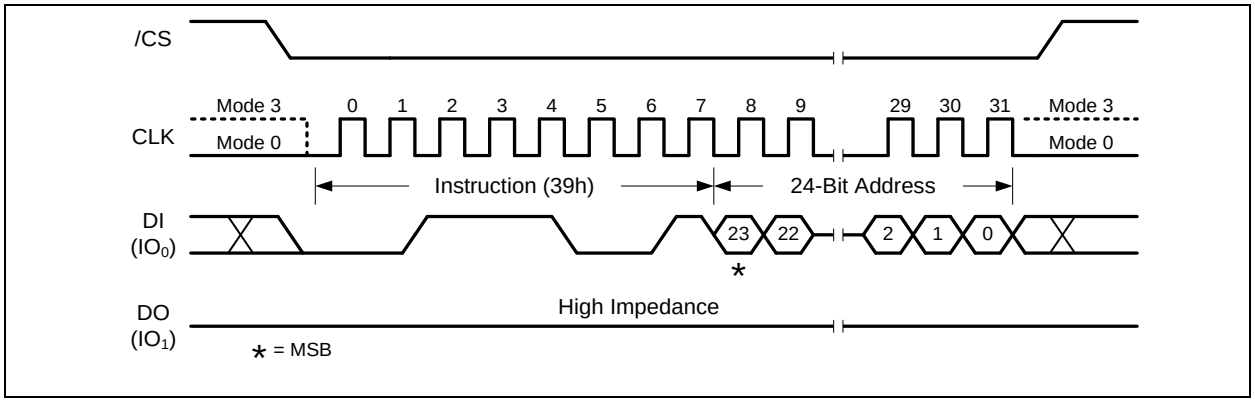

Figure 6.4.56a. Block/Sector Unlock Instruction (SPI Mode)

32-Bit Address is required when the device is operating in 4-Byte Address Mode

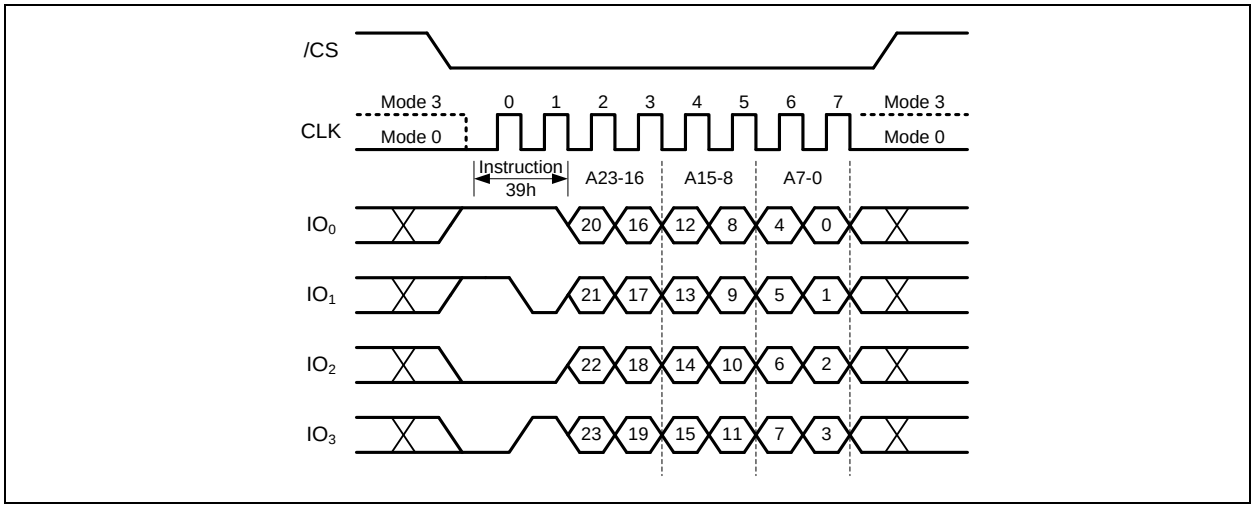

Figure 6.4.56b. Block/Sector Unlock Instruction (QPI Mode)

32-Bit Address is required when the device is operating in 4-Byte Address Mode

6.4.57 Read Flex Block/Sector Lock Bit (3Dh)

The Read Flex Block/Sector Lock provides an alternative way to protect the memory array from adverse Erase/Program operations. The Flex Block/Sector Lock bits are volatile bits.

To read out the lock bit value of a specific block or sector as illustrated in Figure 6.2.57, a Read Block/Sector Lock Bit command must be issued by driving /CS low, shifting the instruction code “3Dh” into the Data Input (DI) pin on the rising edge of CLK, followed by a 24/32-bit address. The Block/Sector Lock bit value will be shifted out on the DO pin at the falling edge of CLK with most significant bit (MSB) first as shown in Figure 6.2.57. If the least significant bit (LSB) is 1, the corresponding block/sector is locked; if LSB=0, the corresponding block/sector is unlocked, and an Erase/Program operation can be performed.

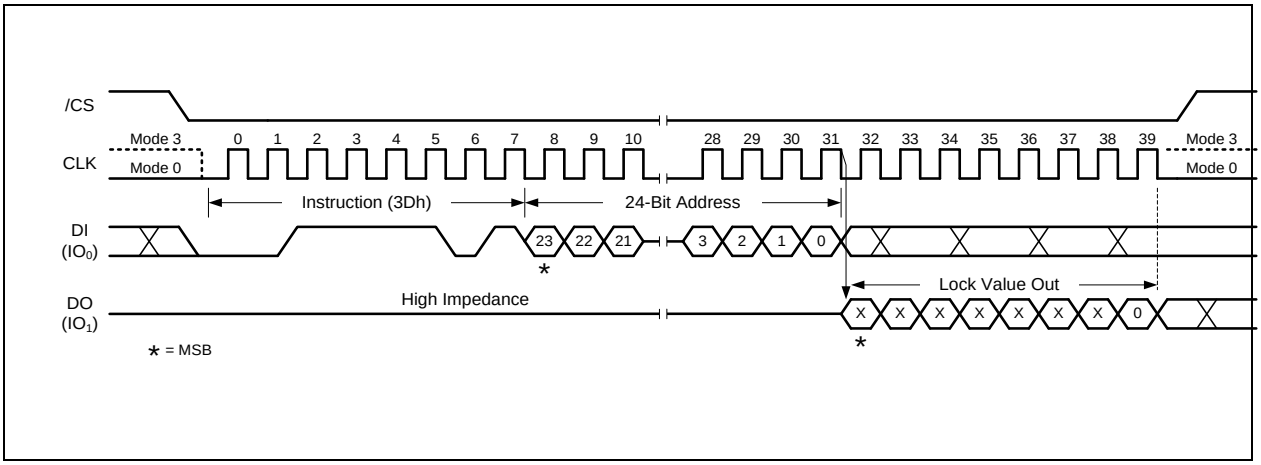

Figure 6.4.57a. Read Block Lock Instruction (SPI Mode)

32-Bit Address is required when the device is operating in 4-Byte Address Mode

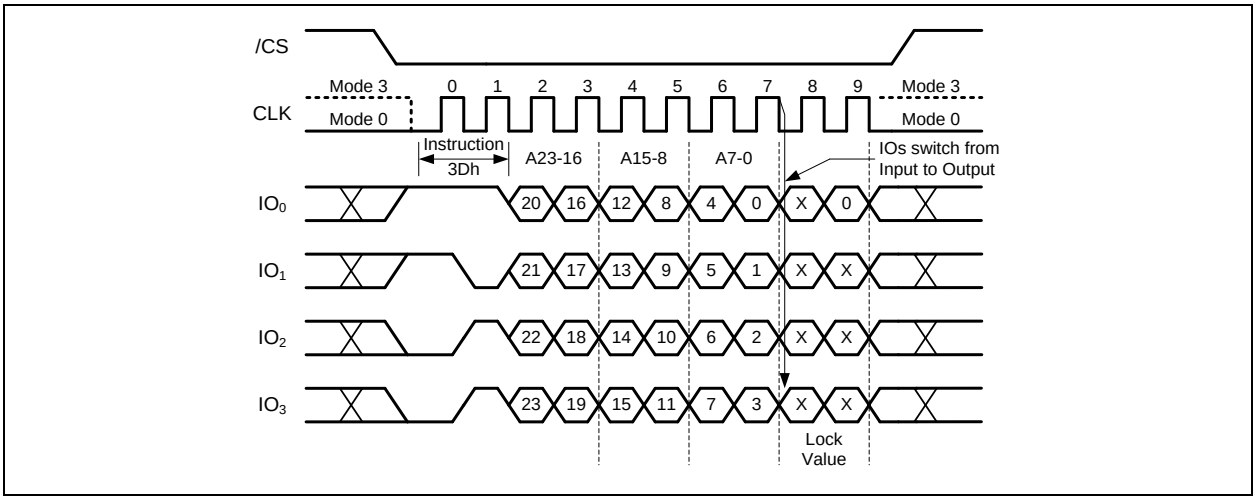

Figure 6.4.57b. Read Block Lock Instruction (QPI Mode)

32-Bit Address is required when the device is operating in 4-Byte Address Mode

6.4.58 Global Flex Block/Sector Lock (7Eh)

All Flex Block/Sector Lock bits can be set to 1 by the Global Flex Block/Sector Lock instruction. The command must be issued by driving /CS low, shifting the instruction code “7Eh” into the Data Input (DI) pin on the rising edge of CLK, and then driving /CS high. A Write Enable instruction must be executed before the device will accept the Flex Block/Sector Lock Instruction (Status Register bit WEL= 1).

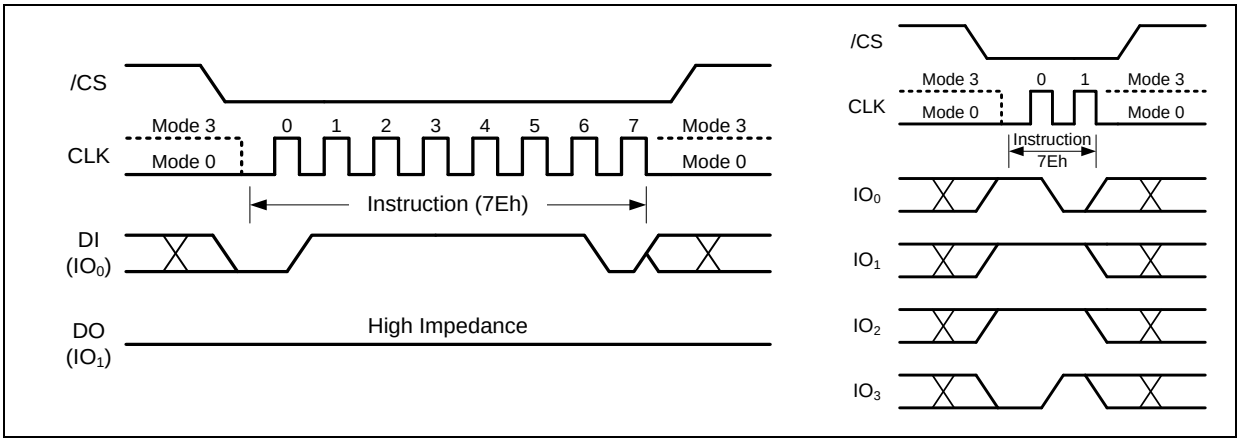

Figure 6.4.58. Global Flex Block/Sector Lock Instruction for SPI Mode (left) or QPI Mode (right)

6.4.59 Global Flex Block/Sector Unlock (98h)

All Flex Block/Sector Lock bits can be set to 0 by the Global Flex Block/Sector Unlock instruction. The command must be issued by driving /CS low, shifting the instruction code “98h” into the Data Input (DI) pin on the rising edge of CLK, and then driving /CS high. A Write Enable instruction must be executed before the device will accept the Flex Block/Sector Lock Instruction (Status Register bit WEL= 1).

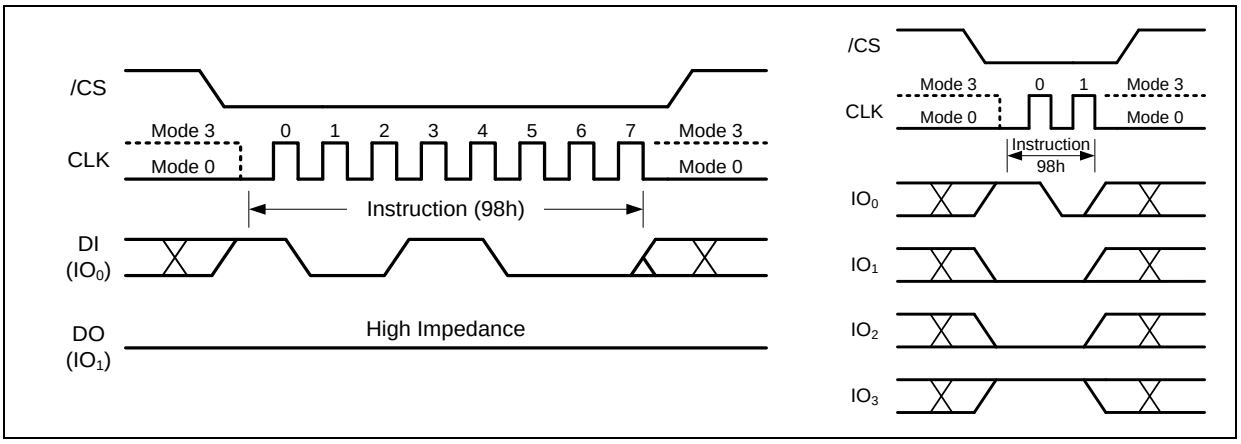

Figure 6.4.59. Global Flex Block/Sector Unlock Instruction for SPI Mode (left) or QPI Mode (right)

6.4.60 Enable Reset (66h) and Reset Device (99h)

Because of the small package and the limitation on the number of pins, the W25QxxRV provides a software Reset instruction instead of a dedicated RESET pin. Once the Reset instruction is accepted, any on-going internal operations will be terminated, and the device will return to its default power-on state and lose all the current volatile settings, such as Write Enable Latch (WEL) status, Program/Erase Suspend status, Read parameter setting (P7-P0), setting (M7-M0) and Wrap Bit setting (W6-W4).

"Enable Reset (66h)" and "Reset (99h)" instructions can be issued in either SPI mode or QPI mode. To avoid accidental reset, both instructions must be issued in sequence. Any other commands other than "Reset (99h)" after the "Enable Reset (66h)" command will disable the "Reset Enable" state. A new sequence of "Enable Reset (66h)" and "Reset (99h)" is needed to reset the device. Once the Reset command is accepted by the device, the device will take approximately tRST=30us to reset. During this period, no command will be accepted.

Data corruption may happen if there is an on-going or suspended internal Erase or Program operation when the Reset command sequence is accepted by the device. It is recommended to check the BUSY bit and the SUS bit in Status Register before issuing the Reset command sequence.

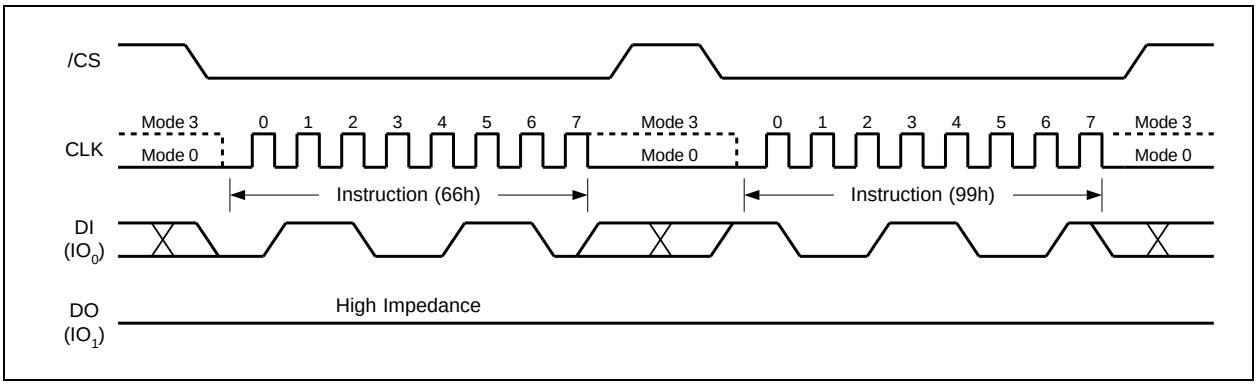

Figure 6.4.60a. Enable Reset and Reset Instruction Sequence (SPI Mode)

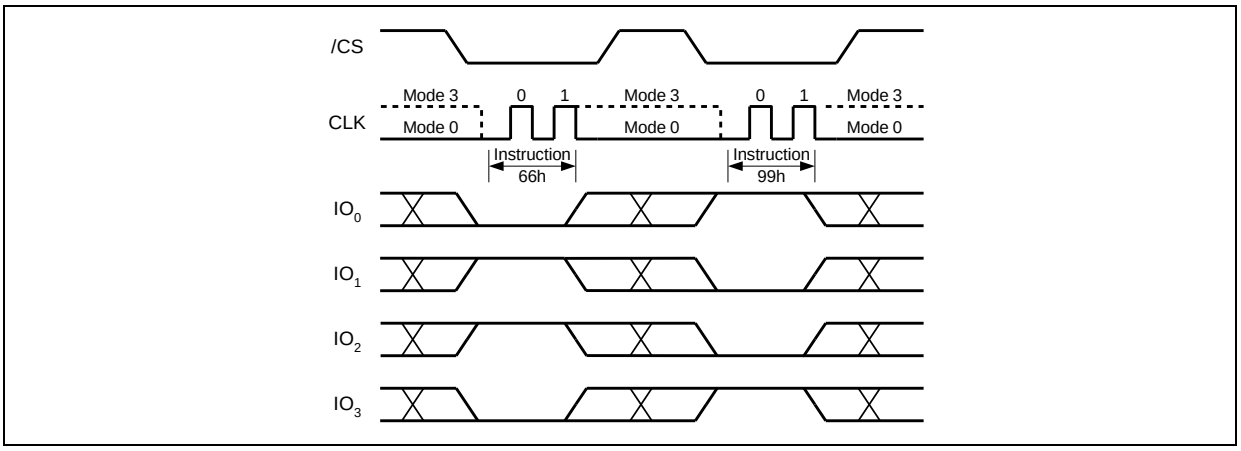

Figure 6.4.60b. Enable Reset and Reset Instruction Sequence (QPI Mode)

6.4.61 Clear Buffer(81h)

The Clear Buffer command allows all data in the buffer to be written as "1". A Write Enable instruction is not required and the instruction is initiated by driving the /CS pin low and then shifting the instruction code "81h" and a 32/24-bit address (BA31-BA24/BA23-A0) to the DI pin. The /CS pin must be held low while instruction and address are transferred to the device. Then by driving /CS pin high, clearing the buffer with all "1". The Clear Buffer instruction sequence is shown in Figure 6.2.61.

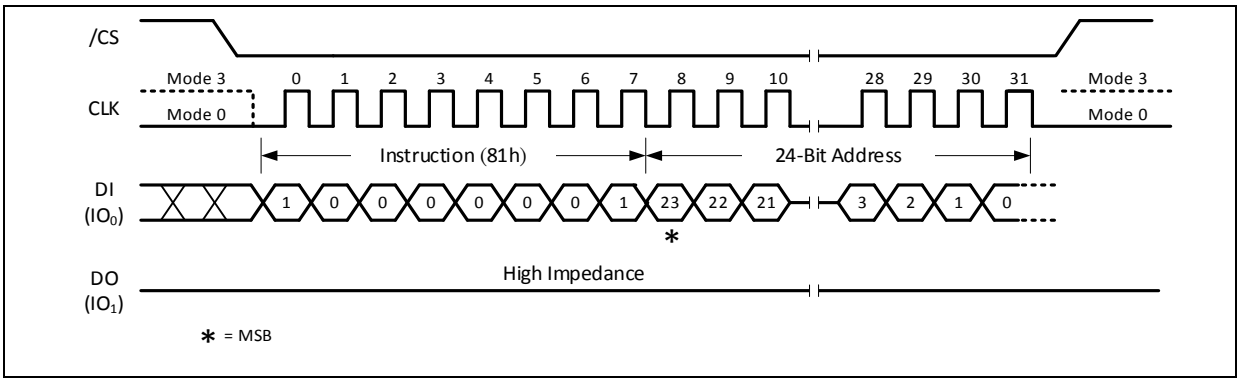

Figure 6.4.61. Clear Buffer (SPI Mode)
32-Bit Buffer Address is required when the device is operating in 4-Byte Address Mode
The Address field in the Clear Buffer (81h) command is Don't care.

6.4.62 Write Buffer(82h)

The Write Buffer instruction allows to write from 1 byte to 256 bytes of data to the buffer. A Write Enable instruction is not required, and the instruction is initiated by driving the /CS pin low and then shifting the instruction code "82h" followed by a 32/24-bit address (BA31-BA24/BA23-A0) and at least one data byte to the DI pin. The /CS pin must be held low for the entire length of the instruction while data is being transferred to the device. The Write Buffer instruction sequence is shown in Figure 6.4.62.

To write the entire 256-byte buffer, the last address byte (the 8 least significant address bits) must be set to 0. The first 16 most significant address bits can be any address. If the last address byte is not zero, and the number of clocks exceeds the remaining buffer length, the addressing is wrapped to the beginning of the buffer. In some cases, less than 256 bytes (partial buffer) can be written without affecting other bytes within the buffer. One condition for performing a partial-buffer write is that the number of clocks cannot exceed the remaining buffer length. If more than 256 bytes are sent to the device, the addressing is wrapped to the beginning of the buffer, overwriting previously sent data.

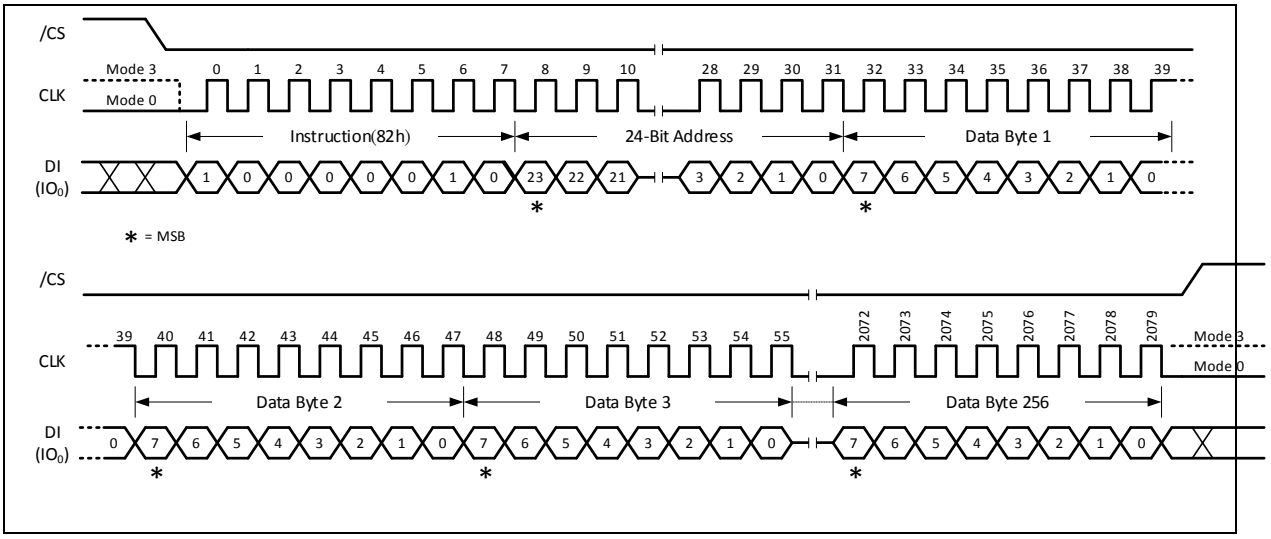

Figure 6.4.62. Write Buffer (SPI Mode)
32-Bit Buffer Address is required when the device is operating in 4-Byte Address Mode

6.4.63 Read Buffer(83h)

The Read Buffer instruction allows one or more data bytes to be sequentially read from the buffer. The instruction is initiated by driving the /CS pin low and then shifting the instruction code “83h” followed by a 32/24-bit address (BA31-BA24/BA23-A0) and an 8-bit dummy into the DI pin. The code and address bits are latched on the rising edge of CLK. After the address is received, the data byte of the addressed memory location will be shifted out on the DO pin at the falling edge of CLK with the most significant bit (MSB) first. The address is automatically incremented to the next higher address after each byte of data is shifted out allowing for a continuous stream of data. This means that the entire buffer can be accessed with a single instruction as long as clock continues. The instruction is completed by driving /CS high.

The Read Data instruction sequence is shown in Figure 6.4.63. If a Read Buffer instruction is issued while an Erase, Program or Write cycle is in progress (BUSY=1), the instruction is ignored and will not have any effects on the current cycle. The Read Buffer instruction allows clock rates from D.C. to a maximum of fR (see AC Electrical Characteristics).

The Read Buffer (83h) instruction is only supported in Standard SPI mode.

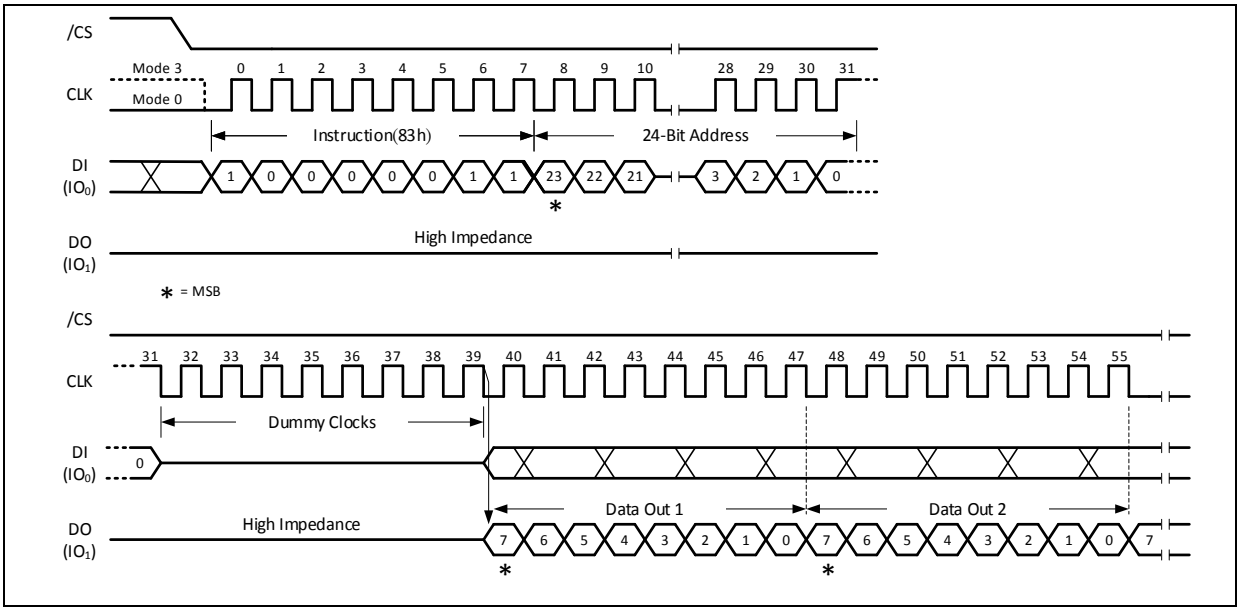

Figure 6.4.63. Read Buffer (SPI Mode)

32-Bit Buffer Address is required when the device is operating in 4-Byte Address Mode

6.4.64 Program Buffer(8Ah)

The program buffer instruction will program the buffer content into the physical memory page that is specified in the instruction. A Write Enable instruction must be executed before the device will accept the Program Buffer instruction (Status Register bit WEL= 1). The instruction is initiated by driving the /CS pin low then shifting the instruction code “8Ah” followed by a 32/24-bit address (A31-A24/A23-A0) into the DI pin as shown in Figure 6.4.64.

After /CS is driven high to complete the instruction cycle, the self-timed Program Buffer instruction will commence for a time duration of tPP (See AC Characteristics). While the Program Buffer cycle is in progress, the Read Status Register instruction may still be used for checking the status of the BUSY bit.

The BUSY bit is a 1 during the Program Buffer cycle and becomes a 0 when the cycle is finished and the device is ready to accept other instructions again. After the Program Buffer cycle has finished, the Write Enable Latch (WEL) bit in the Status Register is cleared to 0. The Program Execute instruction will not be executed if the addressed page is protected by the Block Protect (TB, BP2, BP1, and BP0) bits.

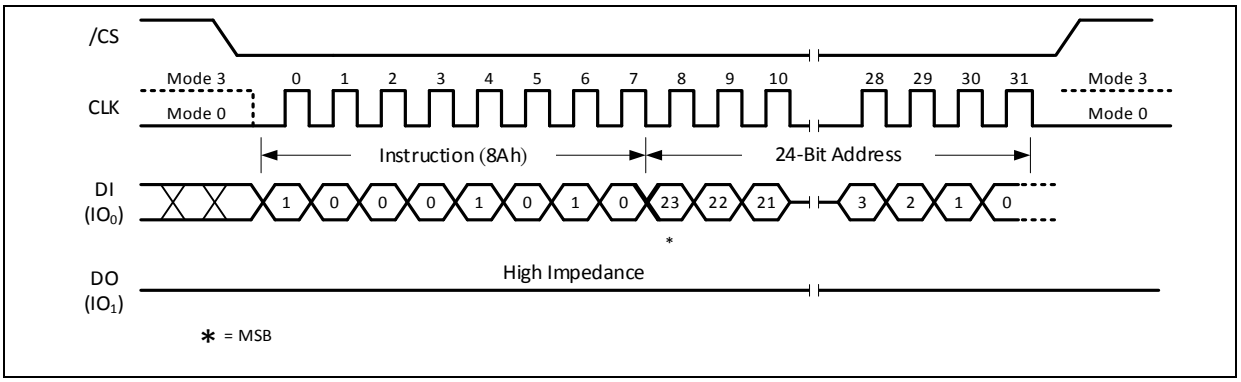

Figure 6.4.64. Program Buffer (SPI Mode)

32-Bit Address is required when the device is operating in 4-Byte Address Mode

6.4.65 Load Buffer(8Bh)

The Load Buffer instruction will write the contents of the physical memory page specified in the instruction to the buffer. A Write Enable instruction is not required, and the instruction is initiated by driving the /CS pin low then shifting the instruction code "8Bh" followed by a32/24-bit address (A31-A24/A23-A0), and then driving /CS high as shown in Figure 6.4.65.

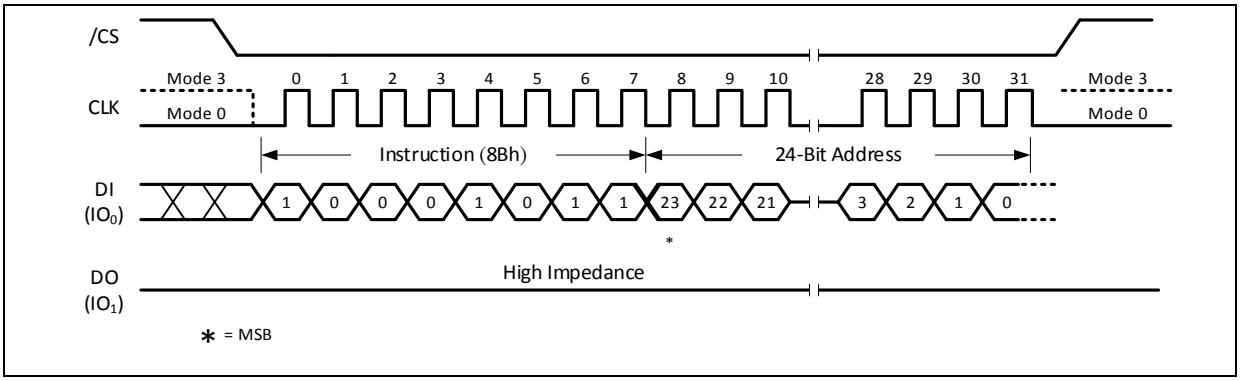

Figure 6.4.65. Load Buffer (SPI Mode)

32-Bit Address is required when the device is operating in 4-Byte Address Mode

6.4.66 Calculate Checksum(9Dh)

The Calculate Checksum instruction is used to compute the checksum for a specified range within the flash memory. This is accomplished by providing the starting address (SA) and ending address (EA) in a 24/32-bit format. The instruction is initiated by driving the /CS pin low and shifting the instruction code "9Dh" followed by the starting address and ending address. The checksum is then calculated and can be read out by driving the /CS pin high. After the Calculate Checksum cycle has finished the Write Enable Latch (WEL) bit in the Status Register is cleared to 0.

1. Code “9Dh” followed by the 24/32-bit starting address (SA23-SA0/SA31-24) and ending address (EA31-A0)
2. Erase/Program Suspend (75h) is not accepted during Calculate Checksum.
3. The 32-bit BYTESUM register is reset by Power-On Reset (POR), Hardware/Software Reset (HW/SW RESET), or the FFh instruction.

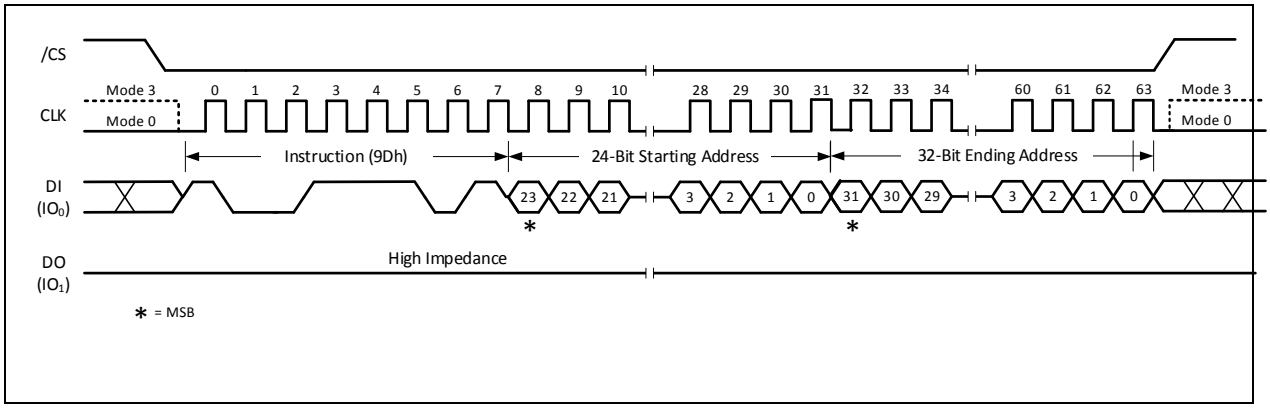

Figure 6.4.66a. Calculate Checksum (SPI Mode)
32-Bit Starting *Address is required when the device is operating in 4-Byte Address Mode*

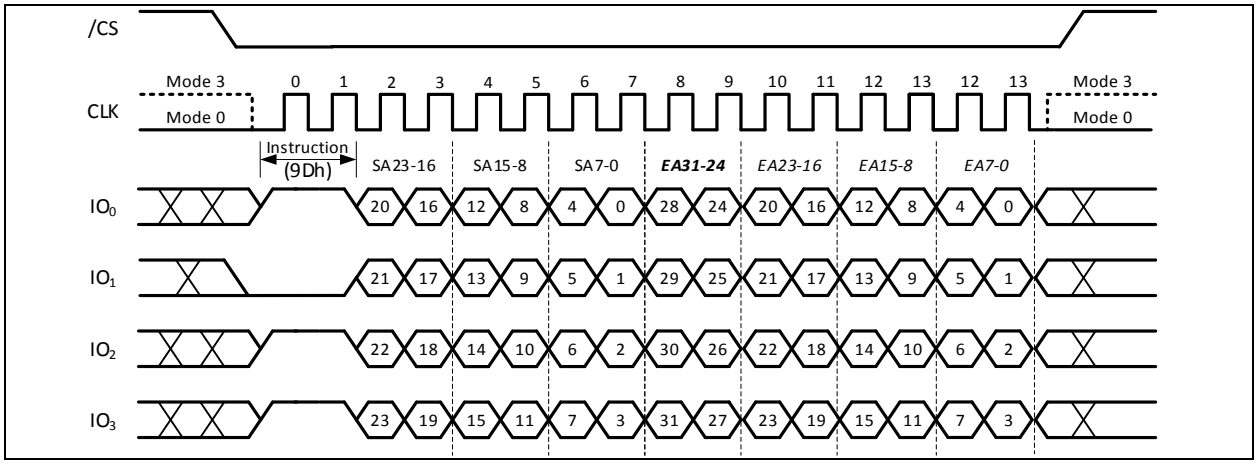

Figure 6.4.66b. Calculate Checksum (QPI Mode)
32-Bit Starting *Address is required when the device is operating in 4-Byte Address Mode*

6.4.67 Read Checksum (9Ch)

The Read Checksum instruction is similar to the Fast Read instruction(0Bh) except that it retrieves the checksum data for a specified range. This is accomplished by adding eight “dummy” clocks after the 24/32-bit address as shown in Figure 6.4.67. The dummy clocks allow the device's internal circuits additional time for setting up the initial address. During the dummy clocks, the data value on the DO pin is a “don’t care”.

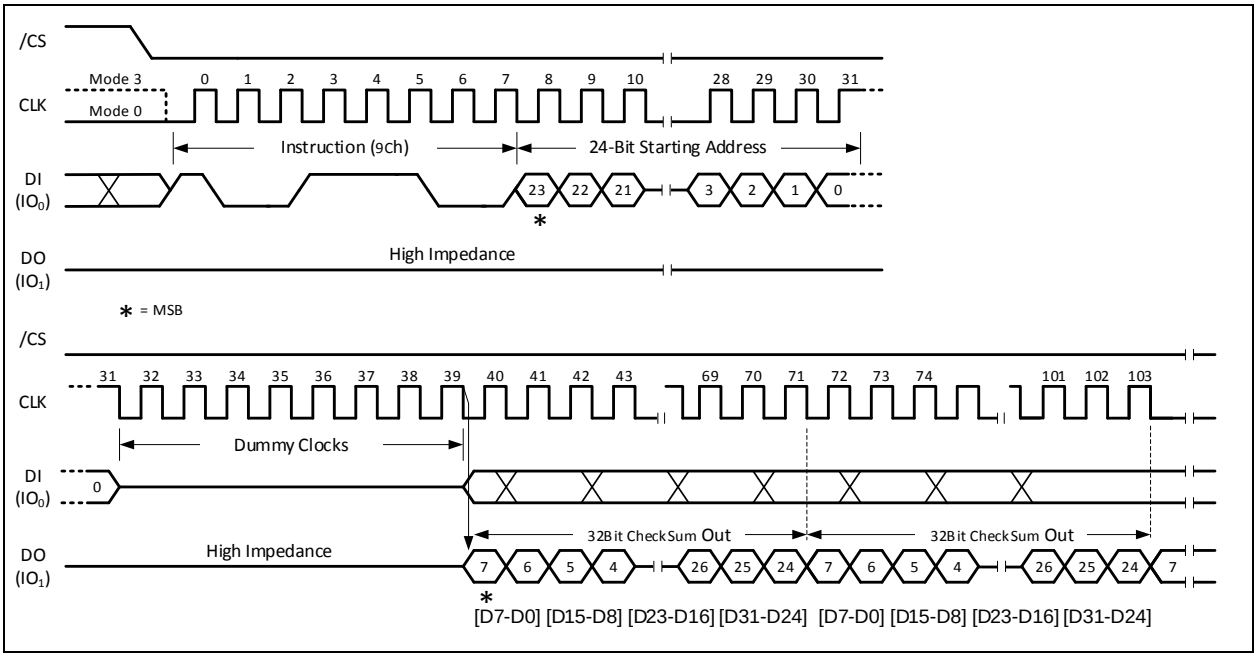

Figure 6.4.67a. Read Checksum (SPI Mode)
32-Bit Starting Address is required when the device is operating in 4-Byte Address Mode

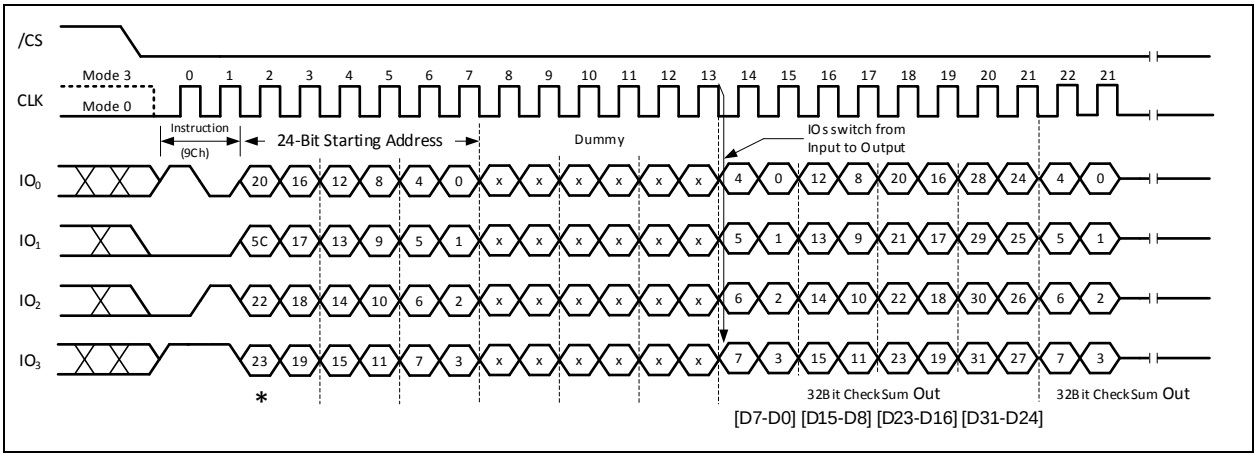

Figure 6.4.67b. Read Checksum (QPI Mode)
32-Bit Starting Address is required when the device is operating in 4-Byte Address Mode
* "Set Read Parameters" instruction (C0h) can set the number of dummy clocks

6.4.68 Recovery for Erase (A8h)

The Recovery for Erase instruction identifies whether a power drop has occurred before completing the erase operation. Upon detecting an incomplete erase due to a power drop, the device performs an internal recovery process to prevent system data influence in non-erase areas.

A Write Enable instruction must be executed prior to accepting the Recovery for Erase instruction (Status Register bit WEL must equal 1). The instruction begins by driving the /CS pin low and shifting the instruction code “A8h”. The sequence for the Recovery for Erase instruction is illustrated in the Figure 6.4.68.

Once /CS is driven high, the self-timed Recovery for Erase instruction initiates for a duration of tRCV (See AC Characteristics). During the Recovery for Erase cycle, the Read Status Register instruction can still be accessed to check the BUSY bit status. The BUSY bit remains at 1 during the Block Erase cycle and switches to 0 once the cycle completes, indicating the device is ready for other instructions. After the Recovery for Erase cycle concludes, the Write Enable Latch (WEL) bit in the Status Register is reset to 0.

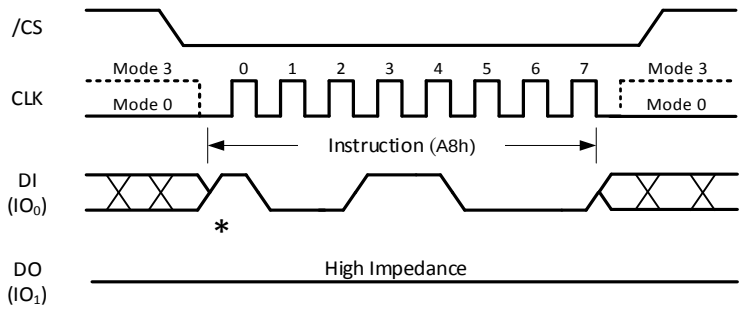

Figure 6.4.68a. Recovery for Erase instruction (SPI Mode only)

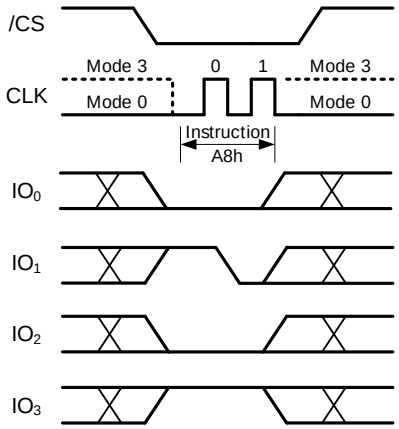

Figure 6.4.68b. Recovery for Erase instruction (QPI Mode only)

6.4.69 Enter Factory Mode (51h-A5h-41h)

Winbond provides a method to speedy-up the erase time, which supports maximum of 50 program-erase cycles.

Upon power-up, the default state of the device upon is Standard SPI mode. This provides full backward compatibility with earlier generations of Winbond serial flash memories. See Instruction Set Table 1-4 & 7-8 for all supported Factory Mode instruction. In order to switch the device to Factory Mode, “Enter Factor Mode (51h-A5h-41h) instruction must be issued.

A hardware reset, a software reset (66h/99h), or upon power up can the device switch from Factory Mode to SPI Standby Mode. During suspend mode, entering factory mode is not allowed. Similarly, during factory mode, issuing a suspend command is not allowed.

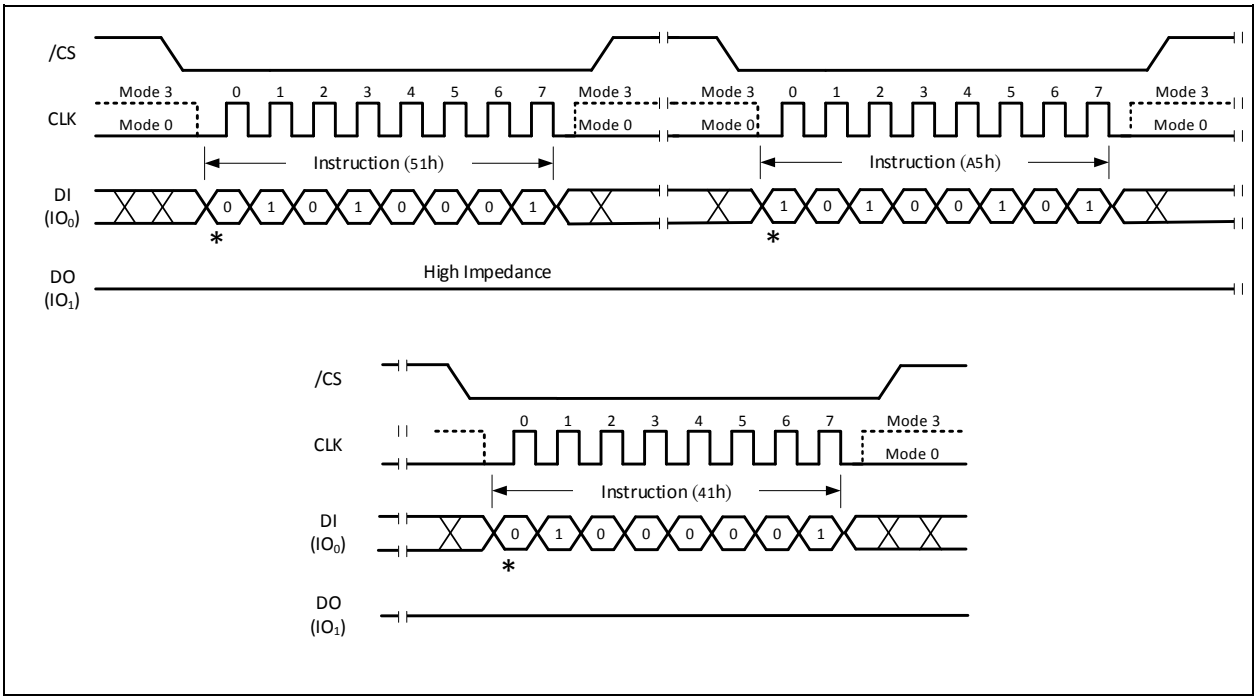

Figure 6.4.69a. Entry Factory Mode Instruction Sequence (SPI Mode)

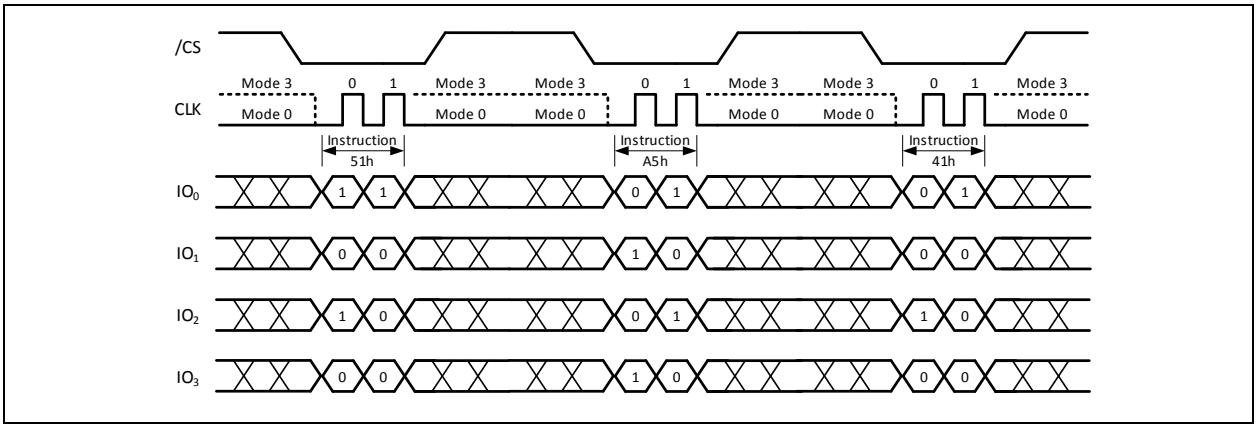

Figure 6.4.69b. Entry Factory Mode Instruction Sequence (QPI Mode)

7 ELECTRICAL CHARACTERISTICS

7.1 Absolute Maximum Ratings (1)

PARAMETERS	SYMBOL	CONDITIONS	RANGE	UNIT
Supply Voltage	VCC		–0.6 to +4.6V	V
Voltage Applied to Any Pin	V_{IO}	Relative to Ground	–0.6 to VCC+0.4	V
Transient Voltage on any Pin	V_{IOT}	<20nS Transient Relative to Ground	–2.0 to VCC+2.0	V
Storage Temperature	T_{STG}		–65 to +150	°C
Lead Temperature	T_{LEAD}		See Note (2)	°C
Electrostatic Discharge Voltage	V_{ESD}	Human Body Model(3)	–2000 to +2000	V

Notes:

1. This device has been designed and tested for the specified operation ranges. Proper operation outside of these levels is not guaranteed. Exposure to absolute maximum ratings may affect device reliability. Exposure beyond absolute maximum ratings may cause permanent damage.
2. Compliant with JEDEC Standard J-STD-20C for small body Sn-Pb or Pb-free (Green) assembly and the European directive on restrictions on hazardous substances (RoHS) 2002/95/EU.
3. JEDEC Std JESD22-A114A (C1=100pF, R1=1500 ohms, R2=500 ohms).

7.2 Operating Ranges

PARAMETER	SYMBOL	CONDITIONS	SPEC		UNIT
			MIN	MAX	
Supply Voltage(1)	VCC	F_R = 133MHz f_R = 104MHz	2.7	3.6	V
Ambient Temperature, Operating	T_A	Industrial plus	–40	+105	°C

Note:

1. VCC voltage during Read can operate across the min and max range but should not exceed ±10% of the programming (erase/write) voltage.

7.3 Power-Up Power-Down Timing and Requirements

PARAMETER		SYMBOL	SPEC		UNIT
			MIN	MAX	
VCC (min) to /CS Low		t_{VSL}(1)	20		µs
Time Delay Before Write Instruction		t_{PUW}(1)	5		ms
Write Inhibit Threshold Voltage		V_{WI}(1)	1.0	2.0	V
The minimum duration for ensuring initialization will occur		t_{PWD}(1)	100		µs
VCC voltage needed to below V_{PWD} for ensuring initialization will occur	W25Q33RV-12RV	V_{PWD}(1)		0.8	V
	W25Q25RV-02RV			0.9	V

Note:

1. These parameters are characterized only.

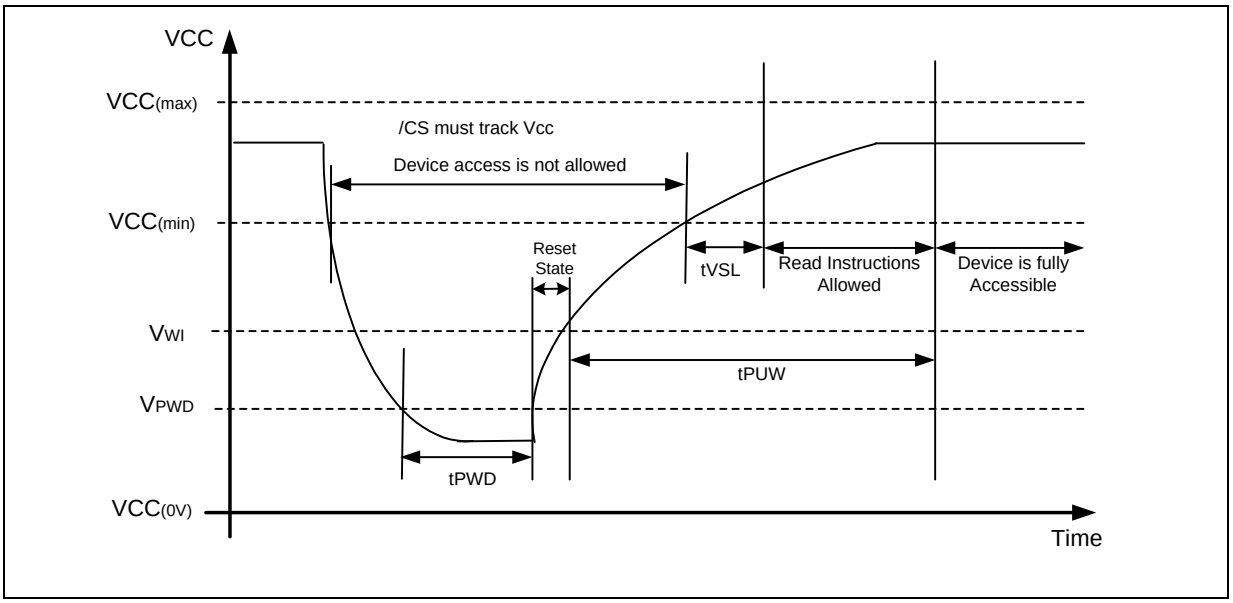

Figure 7.3a. Power-up, Power cycle Timing and Voltage Levels

Note:

1. For power cycle, the system must not initial the power-up sequence until Vcc drops down to VPWD and keeps tPWD for device to initialize correctly.

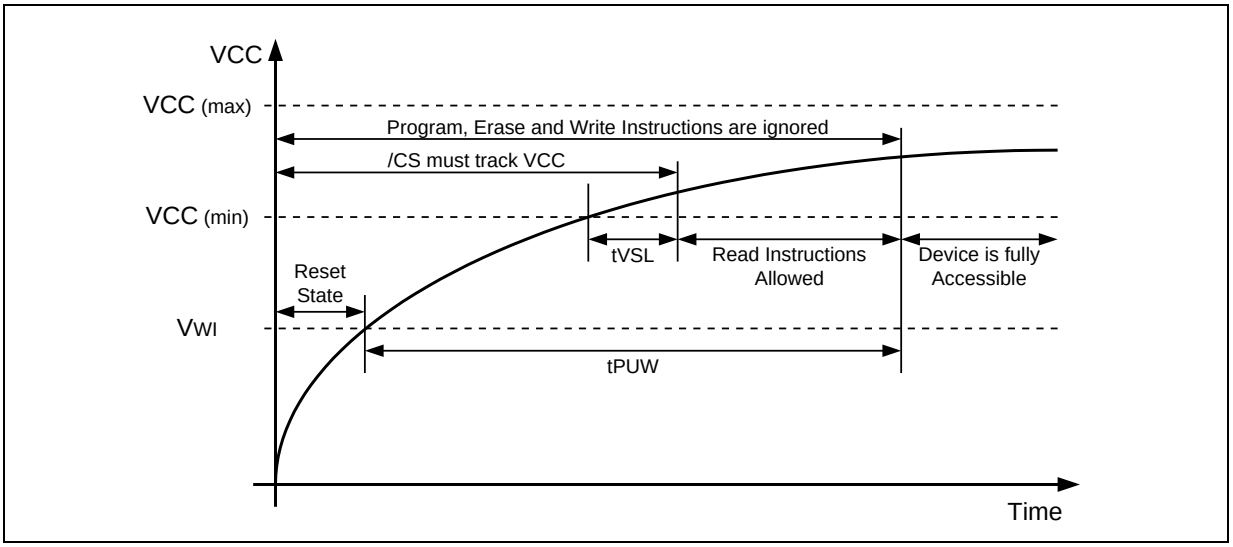

Figure 7.3b. Power-up Timing and Voltage Levels

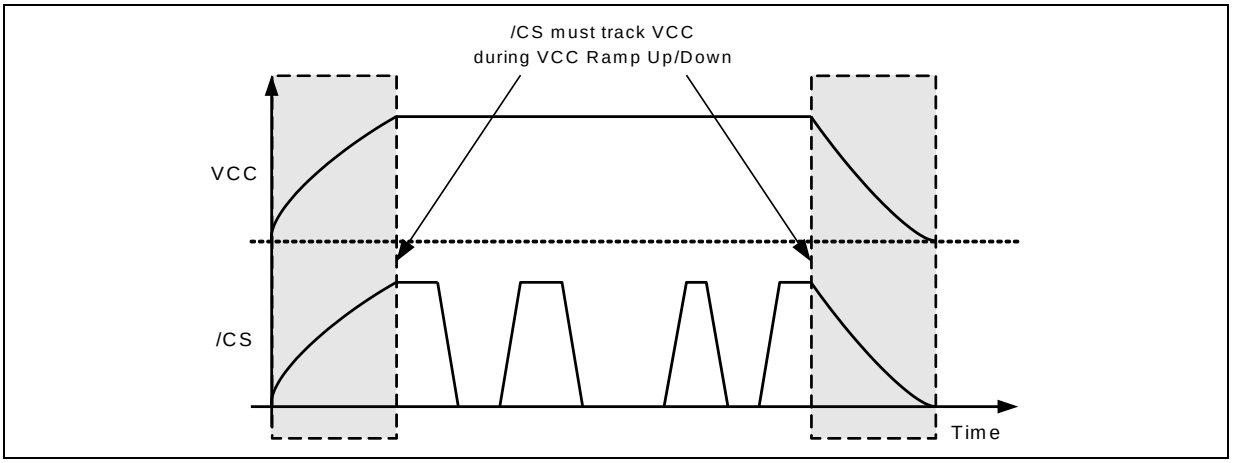

Figure 7.3c. Power-up, Power-Down Requirement

7.4 DC Electrical Characteristics[1]

PARAMETER	SYMBOL	CONDITIONS		SPEC			UNIT
				MIN	TYP	MAX	
Input Capacitance	C_{IN}[1]	V_{IN} = 0V	W25Q33RV W25Q64RV W25Q12RV W25Q25RV W25Q51RV			6	pF
			W25Q01RV			12	
			W25Q02RV			24	
Output Capacitance	Cout[1]	Vout = 0V	W25Q33RV W25Q64RV W25Q12RV W25Q25RV W25Q51RV			8	pF
			W25Q01RV			16	
			W25Q02RV			32	
Standby Current	ICC1	/CS = VCC, VIN = GND or VCC	W25Q33RV W25Q64RV W25Q12RV W25Q25RV W25Q51RV		15	50	µA
					15	50	
					15	50	
					15	170	
					15	185	
			W25Q01RV		60	400	
			W25Q02RV		120	800	
Power-down Current	I_{CC2}	/CS = VCC, VIN = GND or VCC	W25Q33RV W25Q64RV W25Q12RV W25Q25RV W25Q51RV		0.1	20	µA
			W25Q01RV		0.2	25	
			W25Q02RV		0.4	30	

Parameter	Symbol	Conditions		SPEC			Unit
				MIN	TYP	MAX	
Read Data / Dual /Quad Current	Icc3	C = 0.1VCC / 0.9 VCC DO = Open	W25Q33RV, W25Q64RV, W25Q12RV				
			FR = 50MHz		10	15	mA
			FR =84MHz		12	18	mA
			FR =104MHz		14	20	mA
			FR =133MHz		16	25	mA
			DTR=104MHz		10/12/15	17/19/23	mA
			W25Q25RV, W25Q51RV				
			FR = 50MHz		10	15	mA
			FR =84MHz		12	18	mA
			FR =104MHz		14	22	mA
			FR =133MHz		16	25	mA
			DTR=104MHz		10/12/15	17/19/23	mA
			W25Q01RV				
			FR = 50MHz		20	30	mA
			FR =84MHz		24	36	mA
			FR =104MHz		28	44	mA
			FR =133MHz		32	50	mA
			DTR=104MHz		20/24/30	34/38/46	mA
			W25Q02RV				
			FR = 50MHz		40	60	mA
			FR =84MHz		48	72	mA
			FR =104MHz		52	88	mA
			FR =133MHz		64	100	mA
			DTR=104MHz		40/48/60	68/76/92	mA

PARAMETER	SYMBOL	CONDITIONS		SPEC			UNIT
				MIN	TYP	MAX	
Write Status Register Current	I_{CC4}	/CS = VCC	W25Q33RV W25Q64RV W25Q12RV W25Q25RV W25Q51RV		20	25	mA
			W25Q01RV		20	30	
			W25Q02RV		20	60	
Page Program Current	I_{CC5} (2)	/CS = VCC			20	25	mA
Sector/Block Erase Current	I_{CC6}	/CS = VCC			20	25	mA
Chip Erase Current	I_{CC7}	/CS = VCC	W25Q33RV W25Q64RV W25Q12RV W25Q25RV W25Q51RV		20	25	mA
			W25Q01RV		20	35	
			W25Q02RV		20	50	
Input Leakage	I_{LI}					±2	µA
I/O Leakage	I_{LO}					±2	µA
Input Low Voltage	V_{IL}			–0.5		VCC x 0.3	V
Input High Voltage	V_{IH}			VCC x 0.7		VCC + 0.4	V
Output Low Voltage	V_{OL}	I_{OL} = 100 µA				0.2	V
Output High Voltage	V_{OH}	I_{OH} = –100 µA		VCC – 0.2			V

Notes:

1. Tested on sample basis and specified through design and characterization data. TA = 25° C, VCC = 3.0V.
2. Checkerboard Pattern.
3. TBD stands for To Be Determined.

7.5 AC Measurement Conditions

PARAMETER	SYMBOL	SPEC		UNIT
		MIN	MAX	
Load Capacitance	C_L		30	pF
Input Rise and Fall Times	T_R, T_F		5	ns
Input Pulse Voltages	V_{IN}	0.1 VCC to 0.9 VCC		V
Input Timing Reference Voltages	IN	0.3 VCC to 0.7 VCC		V
Output Timing Reference Voltages	OUT	0.5 VCC to 0.5 VCC		V

Note:

1. Output Hi-Z is defined as the point where data out is no longer driven.

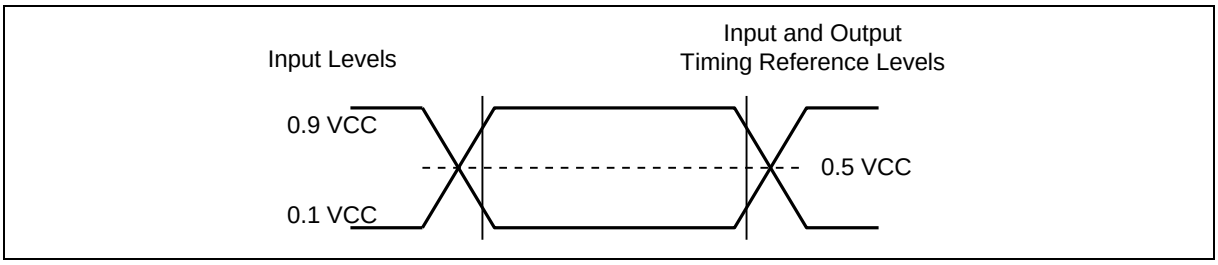

Figure 7.5. AC Measurement I/O Waveform

7.6 AC Electrical Characteristics- Maximum Clock Frequencies (MHz) for Read Data

SPI Mode Maximum Clock Frequencies (MHz) for Read Data - *W25Q33RV/64RV/12RV*

Address Mode		Fast Read/Read Checksum		Fast Read Dual Output		Fast Read Dual I/O		Fast Read Quad Output		Fast Read Quad I/O	
3-/4-byte Address		0Bh/9Ch		3Bh		BBh		6Bh		EBh	
Fixed 4-byte		0Ch		3Ch		BCh		6Ch		ECh	
Default dummy		Fixed dummy -8(2)		Fixed dummy -8(2)		Fixed dummy -4(2) (3)		Fixed dummy -8(2)		Variable dummy Default dummy -6(3)	
Starting Address(1)		Aligned	Any	Aligned	Any	Aligned	Any	Aligned	Any	Aligned	Any
Dummy Cycle	4	x	x	x	x	133	104	x	x	x	x
	6	x	x	x	x	x	x	x	x	133	104
	8	133	104	133	104	x	x	133	104	133	104
	10	x	x	x	x	x	x	x	x	133	104
	12–16	x	x	x	x	x	x	x	x	166	133

Notes:

1. Aligned: 4-bytes address alignment for Read, read address start from A1,A0=0,0. Any: no alignment requirements; reads may begin at any address.
2. 0Bh, 3Bh, BBh, 6Bh, 0Ch, 3Ch, BCh, and 6Ch with fixed dummy clock support.
3. BBh, EBh, BCh and ECh support “Read Command Bypass Mode”. When the M7–M0 is set to Fxh, Read Command Bypass Mode is disabled, and M7–M0 is treated as the dummy-cycle field.

SPI_DTR Mode Maximum Clock Frequencies (MHz) for Read Data - *W25Q33RV/64RV/12RV*

Address Mode		Fast Read		Fast Read Dual I/O		Fast Read Quad I/O	
3-/4-byte Address		0Dh		BDh		EDh	
Fixed 4-byte		X		X		EEh	
Default dummy		Fixed dummy -6		Fixed dummy -6(2) (3)		Variable dummy Default dummy -8(3)	
Starting Address(1)		Aligned	Any	Aligned	Any	Aligned	Any
Dummy Cycle	6	84	66	84	66	x	x
	8	x	x	x	x	84	66
	10	x	x	x	x	84	66
	12–16	x	x	x	x	104	84

Notes:

1. Aligned: 4-bytes address alignment for Read, read address start from A1,A0=0,0. Any: no alignment requirements; reads may begin at any address.
2. 0Dh and BDh with fixed dummy clock support.
3. BDh, EDh and EEh support “Read Command Bypass Mode”. When the M7–M0 is set to Fxh, Read Command Bypass Mode is disabled, and M7–M0 is treated as the dummy-cycle field.

QPI Mode Maximum Clock Frequencies (MHz) for Read Data - *W25Q33RV/64RV/12RV*

Address Mode		Fast Read /Read Checksum		Burst Read With Wrap		Fast Read Quad I/O	
3-/4-byte Address		0Bh / 9Ch		x		EBh(2)	
Fixed 4-byte Address		X		0Ch		ECh (2)	
Starting Address(1)		Aligned	Any	Aligned	Any	Aligned	Any
Dummy Cycle	6	133	104	133	104	133	104
	8	133	104	133	104	133	104
	10	133	104	133	104	133	104
	12–16	166	133	166	133	166	133

Notes:

1. Aligned: 4-bytes address alignment for Read, read address start from A1,A0=0,0. Any: no alignment requirements; reads may begin at any address.
2. EBh and ECh support “Read Command Bypass Mode”. When the M7–M0 is set to Fxh, Read Command Bypass Mode is disabled, and M7–M0 is treated as the dummy-cycle field

QPI_DTR Mode Maximum Clock Frequencies (MHz) for Read Data - *W25Q33RV/64RV/12RV*

Address Mode		Fast Read		Burst Read With Wrap		Fast Read Quad I/O	
3-/4-byte Address Mode		0Dh		0Eh		EDh(2)	
Fixed 4-byte Address		X		X		EEh(2)	
Starting Address(1)		Aligned	Any	Aligned	Any	Aligned	Any
Dummy Cycle	8	84	66	84	66	84	66
	10	84	66	84	66	84	66
	12–16	104	84	104	84	104	84

Notes:

1. Aligned: 4-bytes address alignment for Read, read address start from A1,A0=0,0. Any: no alignment requirements; reads may begin at any address..
2. EDh and EEh support “Read Command Bypass Mode”. When the M7–M0 is set to Fxh, Read Command Bypass Mode is disabled, and M7–M0 is treated as the dummy-cycle field

SPI Mode Maximum Clock Frequencies (MHz) for Read Data - *W25Q25RV/51RV/01RV/02RV*

Address Mode		Fast Read/Read Checksum		Fast Read Dual Output		Fast Read Dual I/O		Fast Read Quad Output		Fast Read Quad I/O	
3-/4-byte Address		0Bh/9Ch		3Bh		BBh		6Bh		EBh	
Fixed 4-byte		0Ch		3Ch		BCh		6Ch		ECh	
Default dummy		Fixed dummy -8(2)		Fixed dummy -8(2)		Fixed dummy -4(2) (3)		Fixed dummy -8(2)		Variable dummy Default dummy -6(3)	
Starting Address(1)		Aligned	Any	Aligned	Any	Aligned	Any	Aligned	Any	Aligned	Any
Dummy Cycle	4	x	x	x	x	104	66	x	x	x	x
	6	x	x	x	x	x	x	x	x	104	66
	8	104	66	104	66	x	x	104	66	133	66
	10	x	x	x	x	x	x	x	x	133	66
	12–16	x	x	x	x	x	x	x	x	133	84

Notes:

1. Aligned: 4-bytes address alignment for Read, read address start from A1,A0=0,0. Any: no alignment requirements; reads may begin at any address..
2. 0Bh, 3Bh, BBh, 6Bh, 0Ch, 3Ch, BCh, and 6Ch with fixed dummy clock support.
3. BBh, EBh, BCh and ECh support “Read Command Bypass Mode”. When the M7–M0 is set to Fxh, Read Command Bypass Mode is disabled, and M7–M0 is treated as the dummy-cycle field.

SPI_DTR Mode Maximum Clock Frequencies (MHz) for Read Data- *W25Q25RV/51RV/01RV/02RV*

Address Mode		Fast Read		Fast Read Dual I/O		Fast Read Quad I/O	
3-/4-byte Address		0Dh		BDh		EDh	
Fixed 4-byte		X		X		EEh	
Default dummy		Fixed dummy -6		Fixed dummy -6(2) (3)		Variable dummy Default dummy -8(3)	
Starting Address(1)		Aligned	Any	Aligned	Any	Aligned	Any
Dummy Cycle	6	84	50	84	50	x	x
	8	x	x	x	x	84	50
	10	x	x	x	x	84	50
	12–16	x	x	x	x	104	66

Notes:

1. Aligned: 4-bytes address alignment for Read, read address start from A1,A0=0,0. Any: no alignment requirements; reads may begin at any address..
2. 0Dh and BDh with fixed dummy clock support.
3. BDh, EDh and EEh support “Read Command Bypass Mode”. When the M7–M0 is set to Fxh, Read Command Bypass Mode is disabled, and M7–M0 is treated as the dummy-cycle field.

QPI Mode Maximum Clock Frequencies (MHz) for Read Data- *W25Q25RV/51RV/01RV/02RV*

Address Mode		Fast Read /Read Checksum		Burst Read With Wrap		Fast Read Quad I/O	
3-/4-byte Address		0Bh / 9Ch		x		EBh(2)	
Fixed 4-byte Address		X		0Ch		ECh (2)	
Starting Address(1)		Aligned	Any	Aligned	Any	Aligned	Any
Dummy Cycle	6	104	66	104	66	104	66
	8	133	66	133	66	133	66
	10	133	66	133	66	133	66
	12–16	133	84	133	84	133	84

Notes:

1. Aligned: 4-bytes address alignment for Read, read address start from A1,A0=0,0. Any: no alignment requirements; reads may begin at any address.
2. EBh and ECh support “Read Command Bypass Mode”. When the M7–M0 is set to Fxh, Read Command Bypass Mode is disabled, and M7–M0 is treated as the dummy-cycle field

QPI_DTR Mode Maximum Clock Frequencies (MHz) for Read Data- *W25Q25RV/51RV/01RV/02RV*

Address Mode		Fast Read		Burst Read With Wrap		Fast Read Quad I/O	
3-/4-byte Address Mode		0Dh		0Eh		EDh(2)	
Fixed 4-byte Address		X		X		EEh(2)	
Starting Address(1)		Aligned	Any	Aligned	Any	Aligned	Any
Dummy Cycle	8	84	50	84	50	84	50
	10	104	50	104	50	84	50
	12–16	104	66	104	66	104	66

Notes:

1. Aligned: 4-bytes address alignment for Read, read address start from A1,A0=0,0. Any: no alignment requirements; reads may begin at any address.
2. EDh and EEh support “Read Command Bypass Mode”. When the M7–M0 is set to Fxh, Read Command Bypass Mode is disabled, and M7–M0 is treated as the dummy-cycle field

7.7 AC Electrical Characteristics

Description	Symbol	Condition	Spec			Unit
			Min	Min	Min	
Clock High, Low Time for all Instructions except for Read Data (03h)	t_{CLH}, t_{CLL} (1)		45%PC			ns
Clock High, Low Time for Read Data (03h) Instruction	t_{CRLH}, t_{CRLL} (1)		45%PC			ns
Clock Rise Time peak to peak	t_{CLCH} (2)		0.1			V/ns
Clock Fall Time peak to peak	t_{CHCL} (2)		0.1			V/ns
/CS Active Setup Time relative to CLK	t_{SLCH}		3			ns
/CS Active Setup Time relative to CLK (DTR only)	$t_{SLCH}1$		4			ns
/CS Not Active Hold Time relative to CLK	t_{CHSL}		3.5			ns
Data In Setup Time	t_{DVCH}		2			ns
Data In Hold Time	t_{DCHX}		2			ns
/CS Active Hold Time relative to CLK	t_{CHSH}		3			ns
/CS Not Active Setup Time relative to CLK	t_{SHCH}		3			ns
/CS Active Hold Time relative to CLK （DTR only）	t_{SHCH}		3			ns
/CS Deselect Time (for Read)	$t_{SHSL}1$		10			ns
/CS Deselect Time (for Erase or Program or Write)	$t_{SHSL}2$		50			ns
Output Disable Time	t_{SHQZ} (2)				7	ns

DESCRIPTION	SYMBOL	CONDITION	SPEC			UNIT
			MIN	TYP	MAX	
Clock Low to Output Valid VCC=2.7~3.0V / VCC=3.0~3.6V	t_{CLQV}	W25Q33RV W25Q64RV W25Q12RV			5 / 4.5	ns
		W25Q25RV W25Q51RV			6 / 5	
		W25Q01RV			7.5 / 5	ns
		W25Q02RV			7.5 / 6	ns
Output Hold Time	t_{CLQX}		1.5			ns
/HOLD Active Setup Time relative to CLK	t_{HLCH}		5			ns
/HOLD Active Hold Time relative to CLK	t_{CHHH}		5			ns
/HOLD Not Active Setup Time relative to CLK	t_{HHCH}		5			ns
/HOLD Not Active Hold Time relative to CLK	t_{CHHL}		5			ns
/HOLD to Output Low-Z	t_{HHQX}(2)				7	ns
/HOLD to Output High-Z	t_{HLQZ}(2)				12	ns
Write Protect Setup Time Before /CS Low	t_{WHSL}(3)		20			ns
Write Protect Hold Time After /CS High	t_{SHWL}(3)		100			ns
/CS High to Power-down Mode	t_{DP}(2)				3	µs
/CS High to Standby Mode without ID Read	t_{RES1}(2)				5	µs
/CS High to Standby Mode with ID Read	t_{RES2}(2)				1.8	µs
/CS High to next Instruction after Suspend	t_{SUS}(2)				20	µs
/CS High to next Instruction after Reset	t_{RST}(2)				30	µs
/RESET pin Low period to reset the device	t_{RESET}(2)		1(5)			µs

Program and Erase Time

DESCRIPTION	SYMBOL	CONDITION	SPEC			UNIT
			MIN	TYP	MAX	
Write Status Register Time	t_W			1	15	ms
Page Program Time	t_{PP}			0.18	0.6	ms
Sector Erase Time (4KB)	t_{SE}	W25Q33RV W25Q64RV W25Q12RV		30	250	ms
		W25Q25RV W25Q51RV W25Q01RV W25Q02RV		30	150	ms
Block Erase Time (32KB)	t_{BE1}			120	1,600	ms
Block Erase Time (64KB)	t_{BE2}			150	2,000	ms
Chip Erase Time	t_{CE}	W25Q33RV		8	40	s
		W25Q64RV		15	80	
		W25Q12RV		30	160	
		W25Q25RV		60	320	
		W25Q51RV		120	640	
		W25Q01RV		120	640	
		W25Q02RV		120	640	

DS SPEC:

DESCRIPTION	SYMBOL	CONDITION	SPEC			UNIT
			MIN	TYP	MAX	
DS Low after First CLK	t_{DS}				10	ns
DS to Output Data Valid	t_{DSSQ}				0.4	ns
Data Valid Window	t_{DVW}		1.6			ns

/BUSY SPEC:

DESCRIPTION	SYMBOL	CONDITION	SPEC			UNIT
			MIN	TYP	MAX	
/CS Deselect Time (for program/erase) to /BUSY Low	t_{SHBL}				80	ns
/BUSY High to /CS Active	t_{BHSL}			0		ns

Factory mode [9]

DESCRIPTION	SYMBOL	CONDITION	SPEC			UNIT
			MIN	TYP	MAX	
4KB Sector Erase Time (20h)	t_{SE}			15		ms
32KB Block Erase Time (52h)	t_{BE1}			60		ms
64KB Block Erase Time (D8h)	t_{BE2}			75		ms
Chip Erase Time (C7h)	t_{CE}	W25Q51RV W25Q01RV W25Q02RV		60		s
		W25Q25RV		30		s
		W25Q12RV		15		s
		W25Q64RV		8		s
		W25Q33RV		4		s
Program/Erase Cycling Count	cycling	VCC=3.0V~3.6V			50	count

Notes:

1. Clock high + Clock low must be less than or equal to Pc. Pc = 1/fc(max.)
2. Value guaranteed by design and/or characterization, not 100% tested in production.
3. Only applicable as a constraint for a Write Status Register instruction when SRP=1.
4. It is possible to reset the device with shorter tRESET (as short as a few hundred ns), a 1us minimum is recommended to ensure reliable operation.
5. Tested on sample basis and specified through design and characterization data. TA = 25° C, VCC = 3.0V
6. 4-bytes address alignment for Read: read address start from A1,A0=0,0.
7. No restrictions on the starting address, such as 4-bytes address alignment for Read.
8. Certain commands support Dummy settings. For detailed information, please refer to the link “6.4.50 Set Read Parameters (C0h)”
9. Factory mode is only supported with the input VCC range from 3.0V to 3.6V.

7.8 AC Electrical Characteristics Alternative Symbol table

Description	Symbol	Alt
Clock frequency for SPI & QPI Instructions	F_R	f_{C1}
/CS Active Setup Time relative to CLK	t_{SLCH}	t_{CSS}
Data In Setup Time	t_{DVCH}	t_{DSU}
Data In Hold Time	t_{CHDX}	t_{DH}
/CS Deselect Time (for Read)	$t_{SHSL}1$	t_{CSH}
/CS Deselect Time (for Erase or Program or Write)	$t_{SHSL}2$	t_{CSH}
Output Disable Time	t_{SHQZ} (2)	t_{DIS}
Clock Low to Output Valid	t_{CLQV}	t_V
Output Hold Time	t_{CLQX}	t_{HO}

7.9 Serial Output Timing

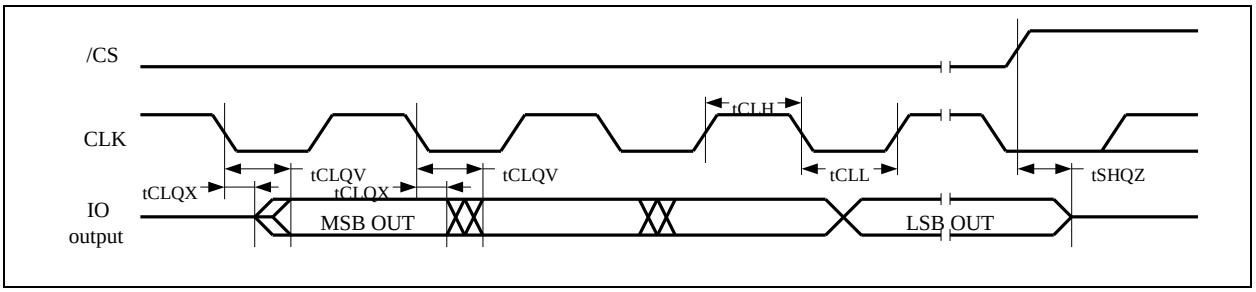

7.10 Serial Input Timing

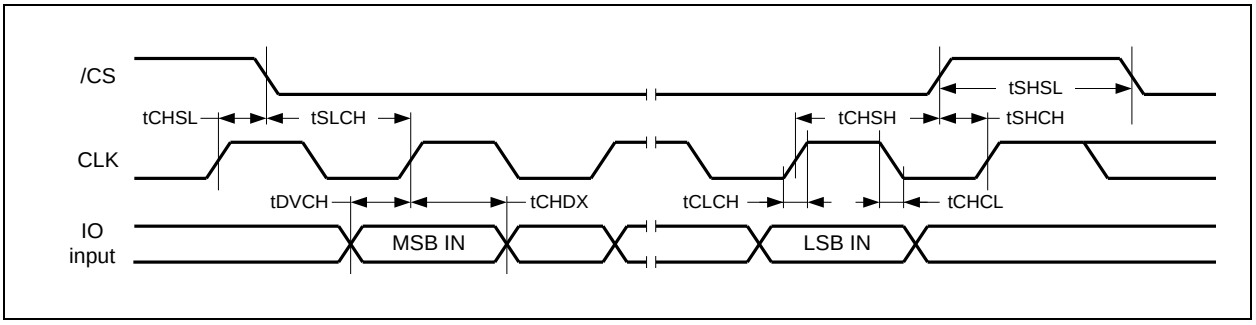

7.11 /HOLD Timing

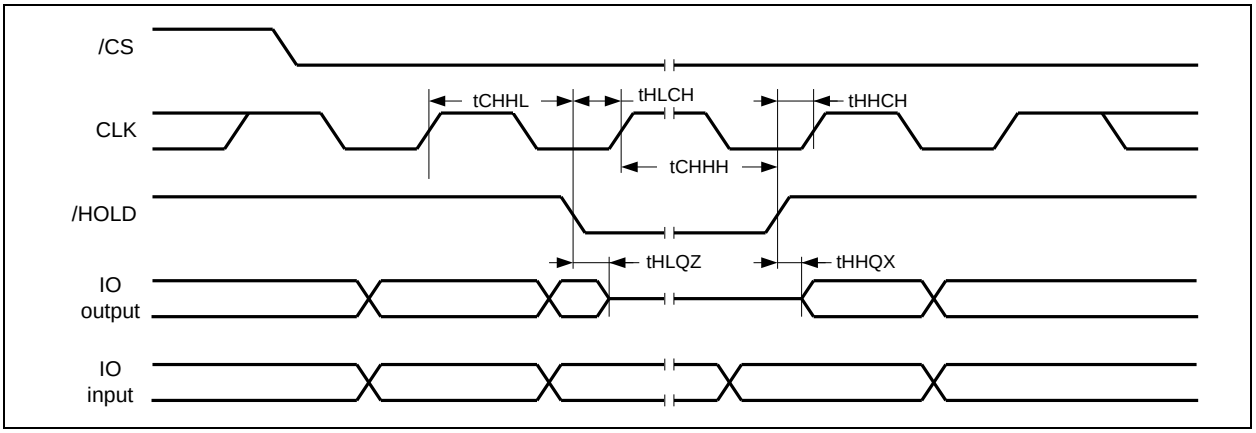

7.12 /WP Timing

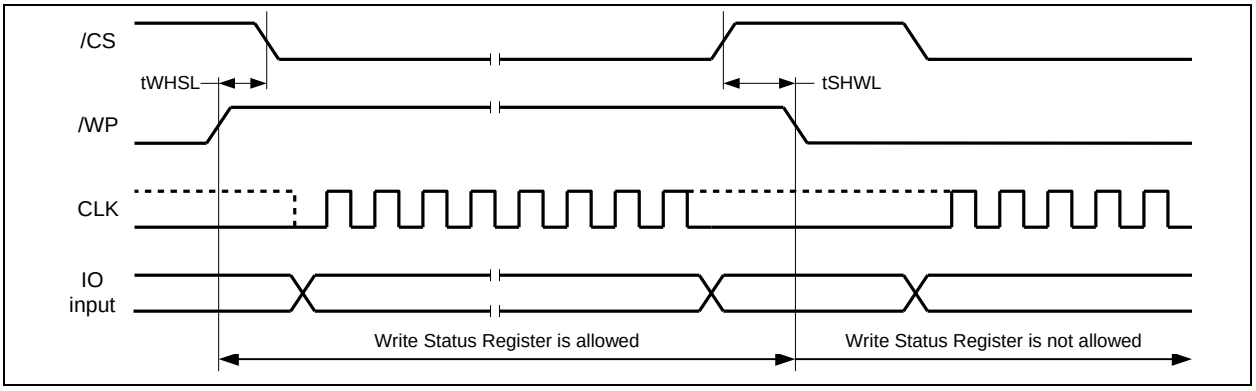

7.13 DS Timing

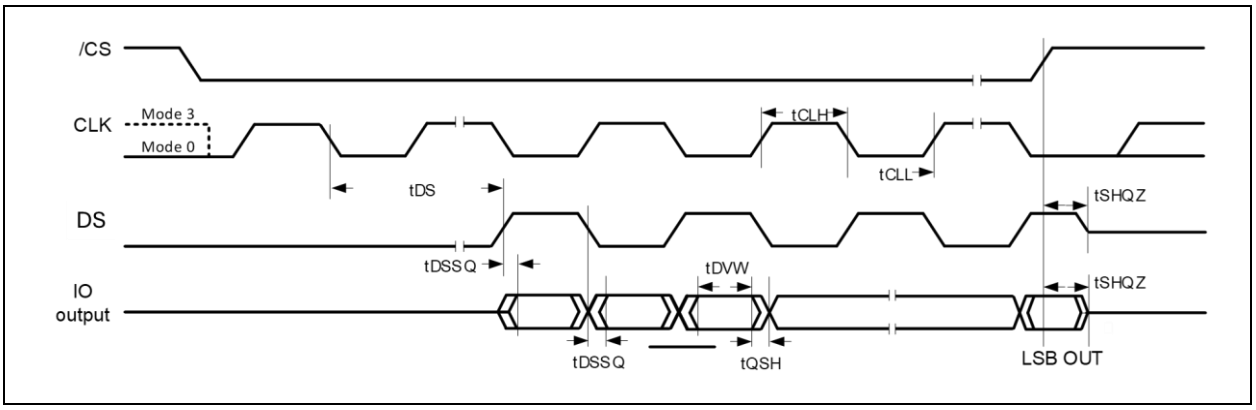

7.14 Hardware /RESET Timing

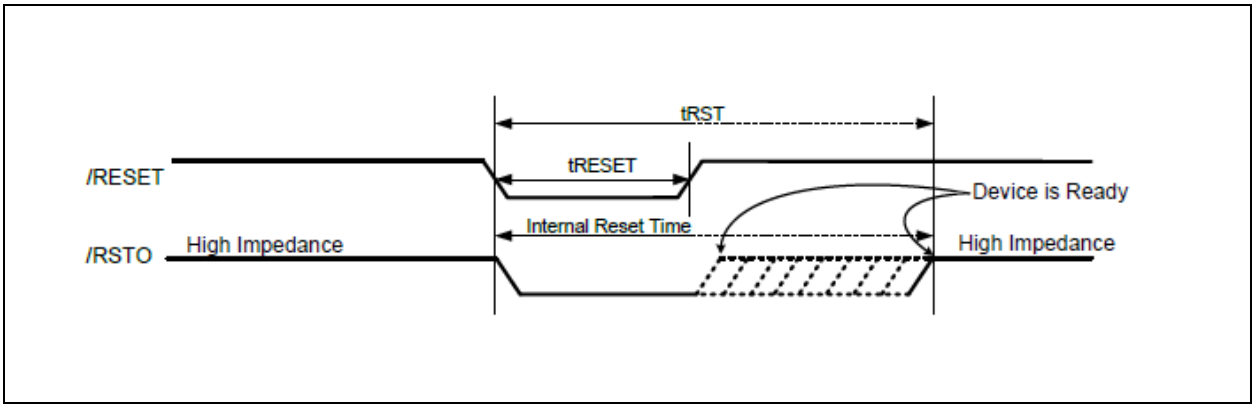

7.15 /BUSY Timing

The following timing diagram illustrates /BUSY signal behavior during Sector Erase (20h) instruction. All other ***Erase and Program*** instructions have similar timing relationship between /CS and /BUSY.

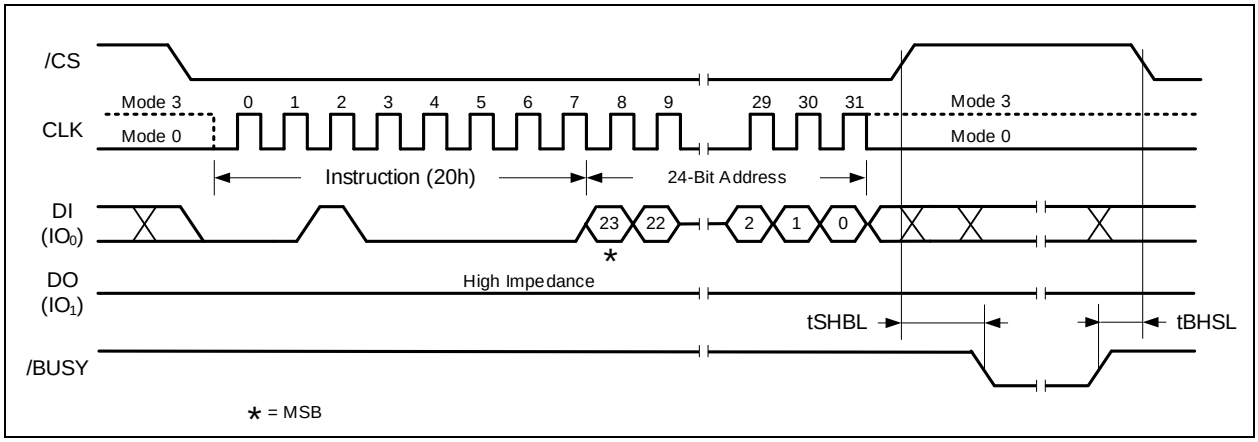

8 PACKAGE SPECIFICATIONS

8.1 8-Pin SOP 150-mil (Package Code SN/CN)

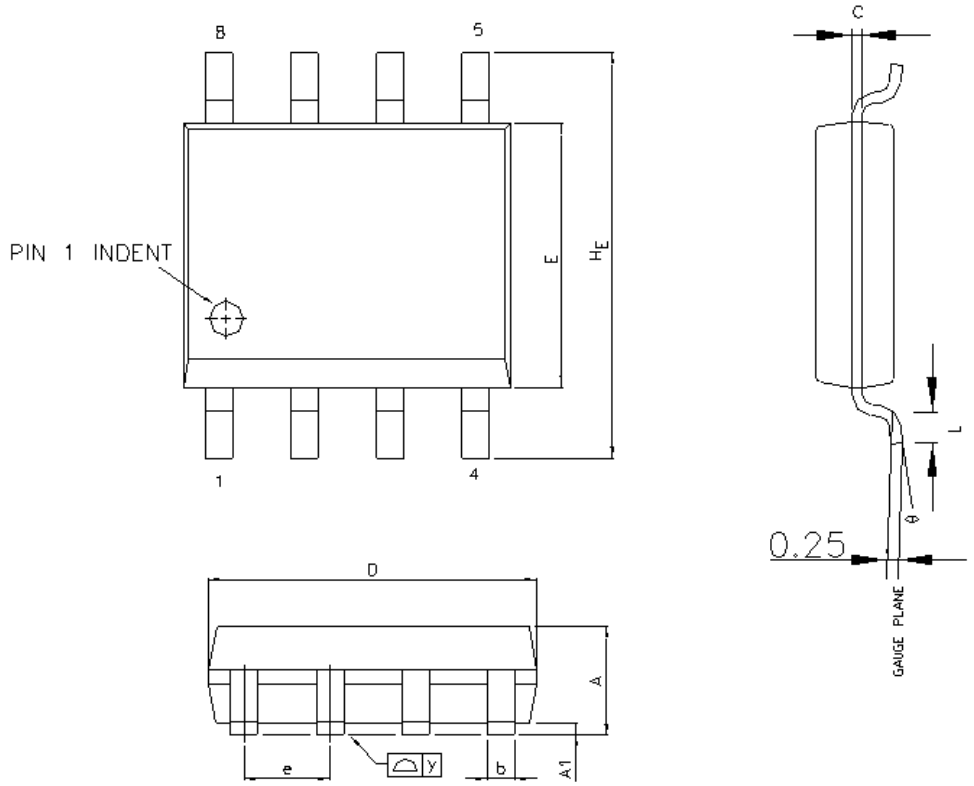

SYMBOL	MILLIMETERS			INCHES		
	Min	Nom	Max	Min	Nom	Max
A	1.35	1.60	1.75	0.053	0.062	0.069
A1	0.10	0.15	0.25	0.004	0.006	0.010
b	0.33	0.41	0.51	0.013	0.016	0.020
C	0.19	0.20	0.25	0.0075	0.0078	0.0098
D	4.80	4.85	5.00	0.188	0.190	0.197
E	3.80	3.90	4.00	0.150	0.153	0.157
H_E	5.80	6.00	6.20	0.288	0.236	0.244
e	1.27BSC			0.050BSC		
L	0.40	0.71	1.27	0.016	0.027	0.050
y	---	---	0.10	---	---	0.004
∘	0°	---	10°	0°	---	10°

Note:

1. Control dimensions are in millimeter.
2. Both the package length and width do not include the mold flash. (Refer JEDEC MS-012)

8.2 8-Pin SOP 208-mil (Package Code SS/CS)

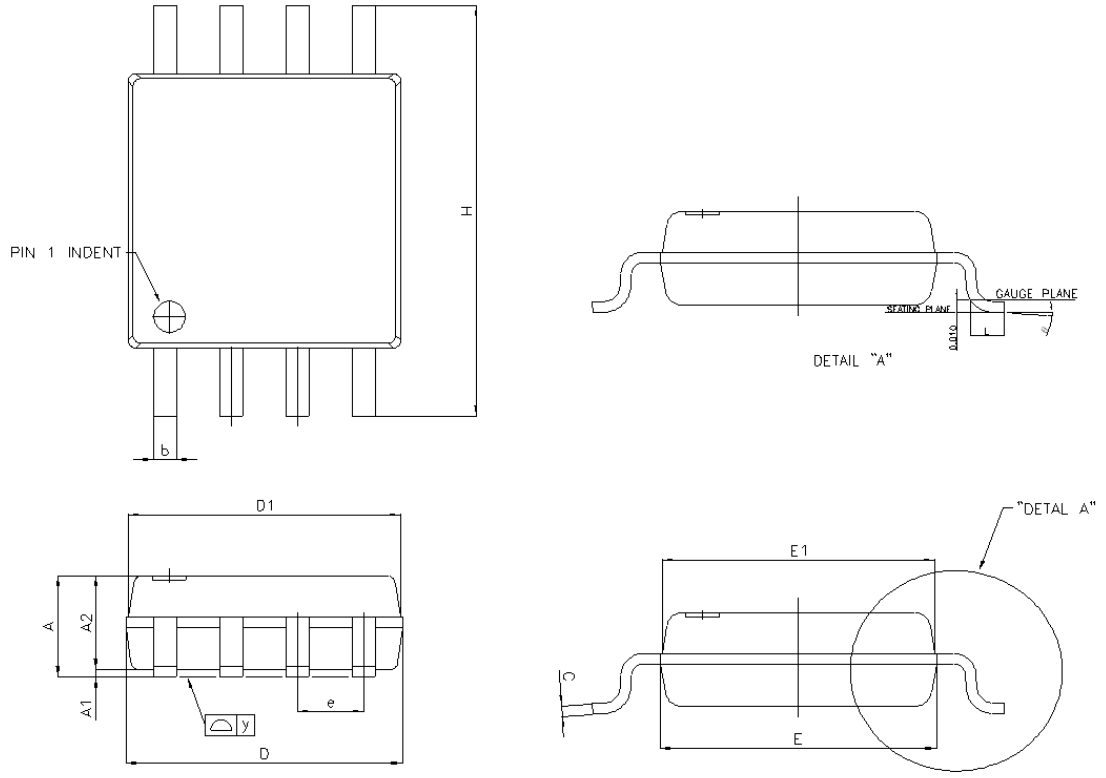

Symbol	Millimeters			Inches		
	Min	Nom	Max	Min	Nom	Max
A	1.75	1.95	2.16	0.069	0.077	0.085
A1	0.05	0.15	0.25	0.002	0.006	0.010
A2	1.70	1.80	1.91	0.067	0.071	0.075
b	0.35	0.42	0.48	0.014	0.017	0.019
C	0.19	0.20	0.25	0.007	0.008	0.010
D	5.18	5.28	5.38	0.204	0.208	0.212
D1	5.13	5.23	5.33	0.202	0.206	0.210
E	5.18	5.28	5.38	0.204	0.208	0.212
E1	5.13	5.23	5.33	0.202	0.206	0.210
e	1.27 BSC			0.050 BSC		
H	7.70	7.90	8.10	0.303	0.311	0.319
L	0.50	0.65	0.80	0.020	0.026	0.031
y	---	---	0.10	---	---	0.004
θ	0°	---	8°	0°	---	8°

Note:

1. Control dimensions are in millimeter.
2. Both the package length and width do not include the mold flash. (Refer JEDEC MS-012)

8.3 8-Pad WSON 6x5-mm (Package Code ZP/CP)

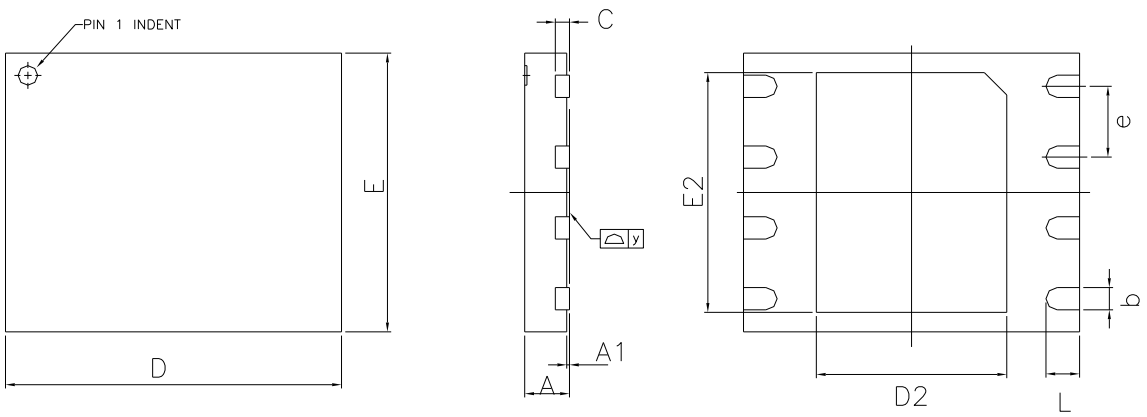

Symbol	Millimeters			Inches		
	Min	Nom	Max	Min	Nom	Max
A	0.70	0.75	0.80	0.028	0.030	0.031
A1	0.00	0.02	0.05	0.000	0.001	0.002
b	0.35	0.40	0.48	0.014	0.016	0.019
C	---	0.20 REF	---	---	0.008 REF	---
D	5.90	6.00	6.10	0.232	0.236	0.240
D2	3.35	3.40	3.45	0.132	0.134	0.136
E	4.90	5.00	5.10	0.193	0.197	0.201
E2	4.25	4.30	4.35	0.167	0.169	0.171
e	1.27 BSC			0.050 BSC		
L	0.55	0.60	0.65	0.022	0.024	0.026
y	0.00	---	0.075	0.000	---	0.003

Note:

1. The metal pad area on the bottom center of the package is not connected to any internal electrical signals. It can be left floating or connected to the device ground (GND pin). Avoid placement of exposed PCB vias under the pad.

8.4 8-Pad XSON 4x4x0.45-mm (Package Code XG)

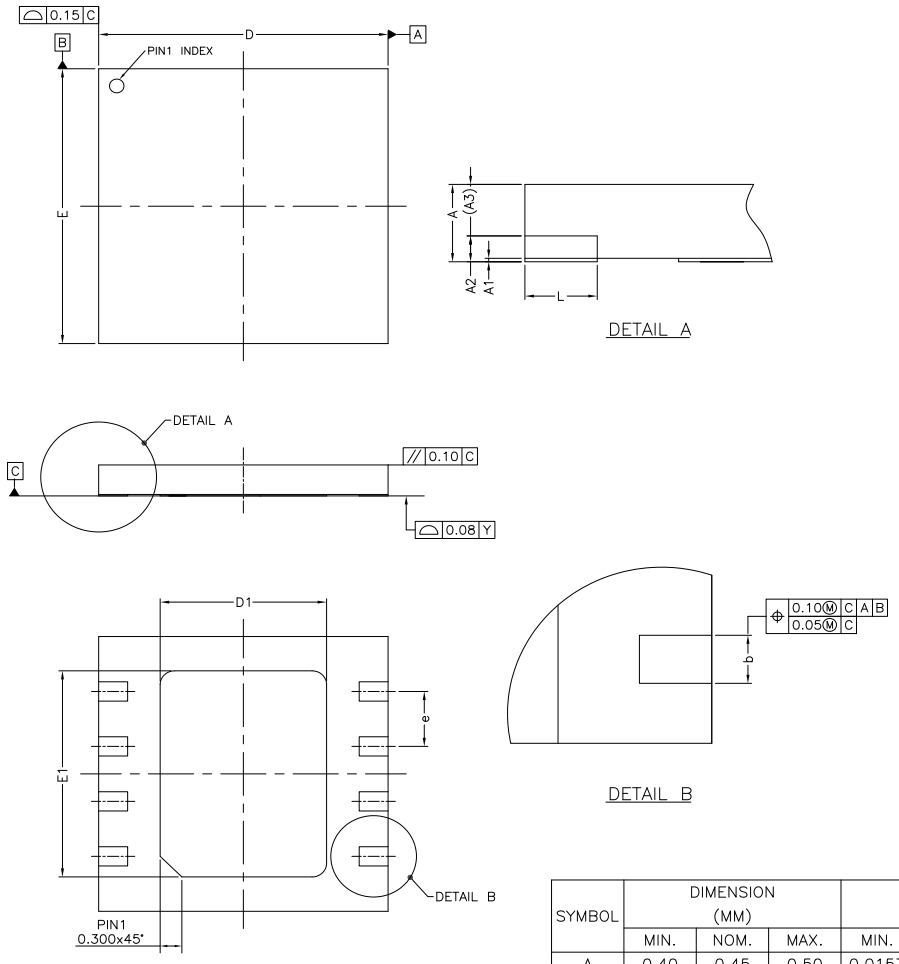

SYMBOL	DIMENSION (MM)			DIMENSION (Inch)		
	MIN.	NOM.	MAX.	MIN.	NOM.	MAX.
A	0.40	0.45	0.50	0.0157	0.0177	0.0196
A1	0.00	0.02	0.05	0	0.0007	0.0019
A2	–	0.15	–	–	0.0059	–
A3	0.25	0.30	0.35	0.0098	0.0118	0.0137
b	0.25	0.30	0.35	0.0098	0.0118	0.0137
D	3.90	4.00	4.10	0.1535	0.1574	0.1614
D1	2.20	2.30	2.40	0.0866	0.0905	0.0944
E	3.90	4.00	4.10	0.1535	0.1574	0.1614
E1	2.90	3.00	3.10	0.1141	0.1181	0.1220
e	0.80 BSC			0.0314 BSC		
L	0.35	0.40	0.45	0.0137	0.0157	0.0177

Note:

1. The metal pad area on the bottom center of the package is not connected to any internal electrical signals. It can be left floating or connected to the device ground (GND pin). Avoid placement of exposed PCB vias under the pad.

8.5 8-Pad USON 4x3-mm (Package Code UU)

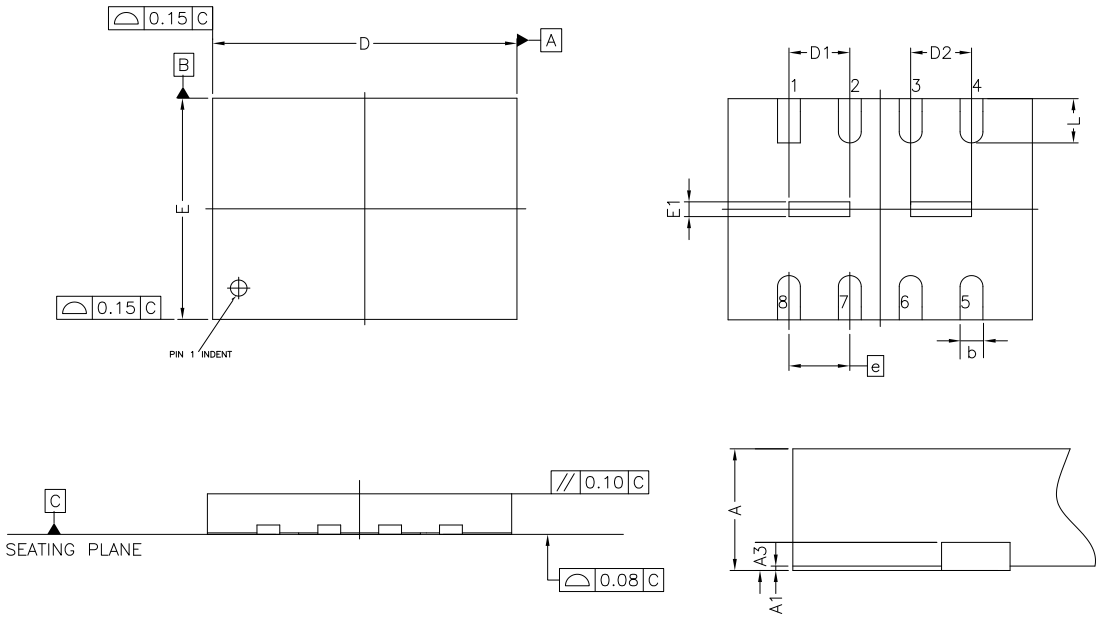

Symbol	Millimeters			Inches		
	Min	Nom	Max	Min	Nom	Max
A	0.50	0.55	0.60	0.020	0.022	0.024
A1	0.00	0.02	0.05	0.000	0.001	0.002
A3	---	0.15	---	---	0.006	---
b	0.25	0.30	0.35	0.010	0.012	0.014
D	3.90	4.00	4.10	0.153	0.157	0.161
D1	0.70	0.80	0.90	0.027	0.031	0.035
D2	0.70	0.80	0.90	0.027	0.031	0.035
E	2.90	3.00	3.10	0.114	0.118	0.122
E1	0.10	0.20	0.30	0.004	0.008	0.012
e	0.80 BSC			0.031 BSC		
L	0.55	0.60	0.65	0.022	0.024	0.026

Note:

1. The metal pad area on the bottom center of the package is not connected to any internal electrical signals. It can be left floating or connected to the device ground (GND pin). Avoid placement of exposed PCB vias under the pad.

8.6 16-Pin SOP 300-mil (Package Code SF/CF)

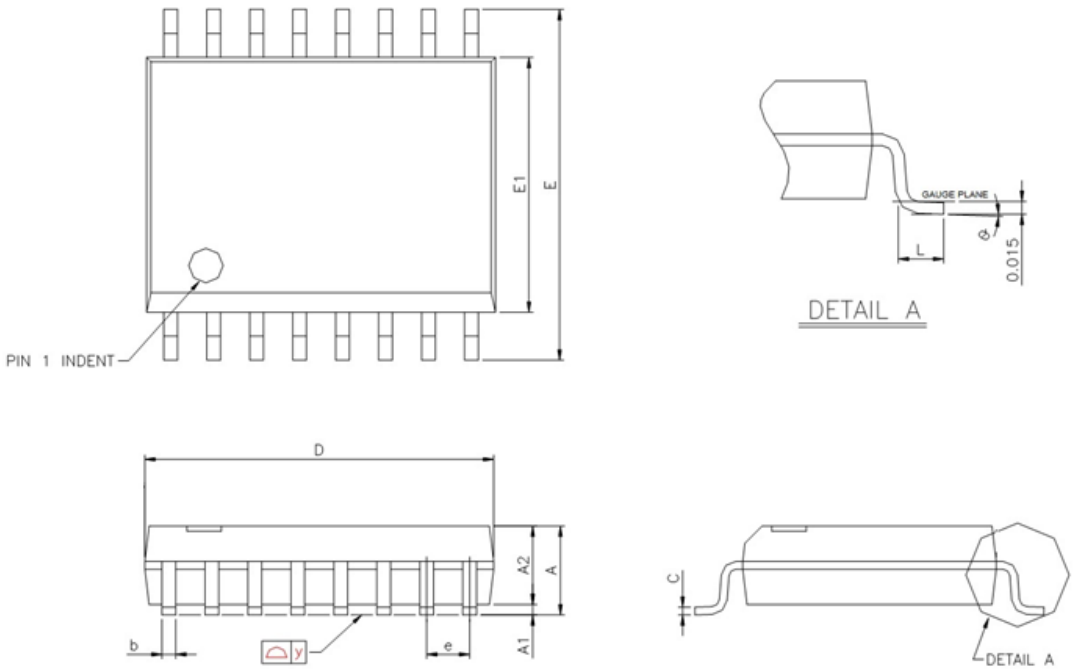

Symbol	Millimeters			Inches		
	Min	Nom	Max	Min	Nom	Max
A	2.36	2.49	2.64	0.093	0.098	0.104
A1	0.10	---	0.30	0.004	---	0.012
A2	---	2.31	---	---	0.091	---
b	0.33	0.41	0.51	0.013	0.016	0.020
C	0.18	0.23	0.28	0.007	0.009	0.011
D	10.08	10.31	10.49	0.397	0.406	0.413
E	10.01	10.31	10.64	0.394	0.406	0.419
E1	7.39	7.49	7.59	0.291	0.295	0.299
e	1.27 BSC			0.050 BSC		
L	0.38	0.81	1.27	0.015	0.032	0.050
y	---	---	0.076	---	---	0.003
θ	0°	---	8°	0°	---	8°

Note:

1. Both the package length and width do not include the mold flash. (Refer JEDEC MS-012)

8.7 8-Pad WSON 8x6-mm (Package Code ZE/CE)

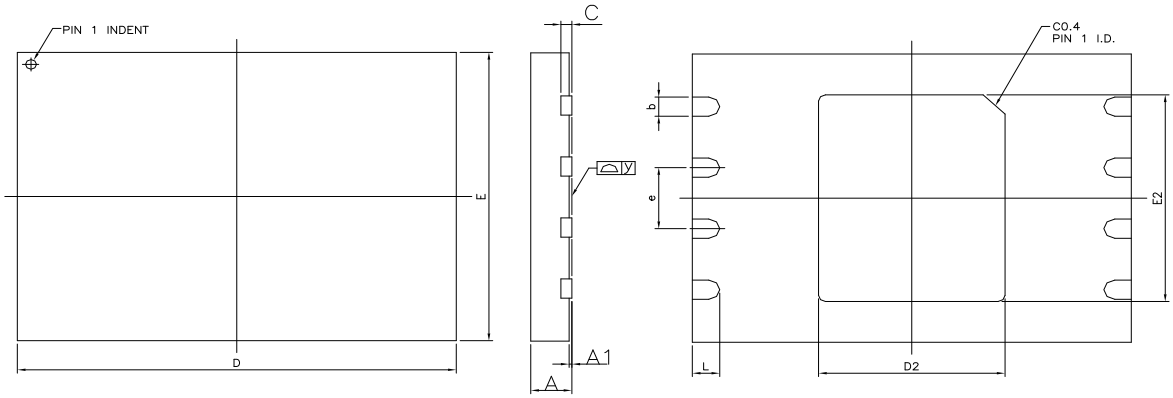

SYMBOL	MILLIMETERS			INCHES		
	Min	Nom	Max	Min	Nom	Max
A	0.70	0.75	0.80	0.028	0.030	0.031
A1	0.00	0.02	0.05	0.000	0.001	0.002
b	0.35	0.40	0.48	0.014	0.016	0.019
C	---	0.20 Ref.	---	---	0.008 Ref.	---
D	7.90	8.00	8.10	0.311	0.315	0.319
D2	3.35	3.40	3.45	0.132	0.134	0.136
E	5.90	6.00	6.10	0.232	0.236	0.240
E2	4.25	4.30	4.35	0.167	0.169	0.171
e	1.27 BSC			0.050 BSC		
L	0.45	0.50	0.55	0.018	0.020	0.022
y	0.00	---	0.05	0.000	---	0.002

Note:

1. The metal pad area on the bottom center of the package is connected to the device ground (VSS pin). Avoid placement of exposed PCB vias under the pad.

8.8 24-Ball TFBGA 8x6-mm (Package Code TB/CB, 5x5-1 Ball Array)

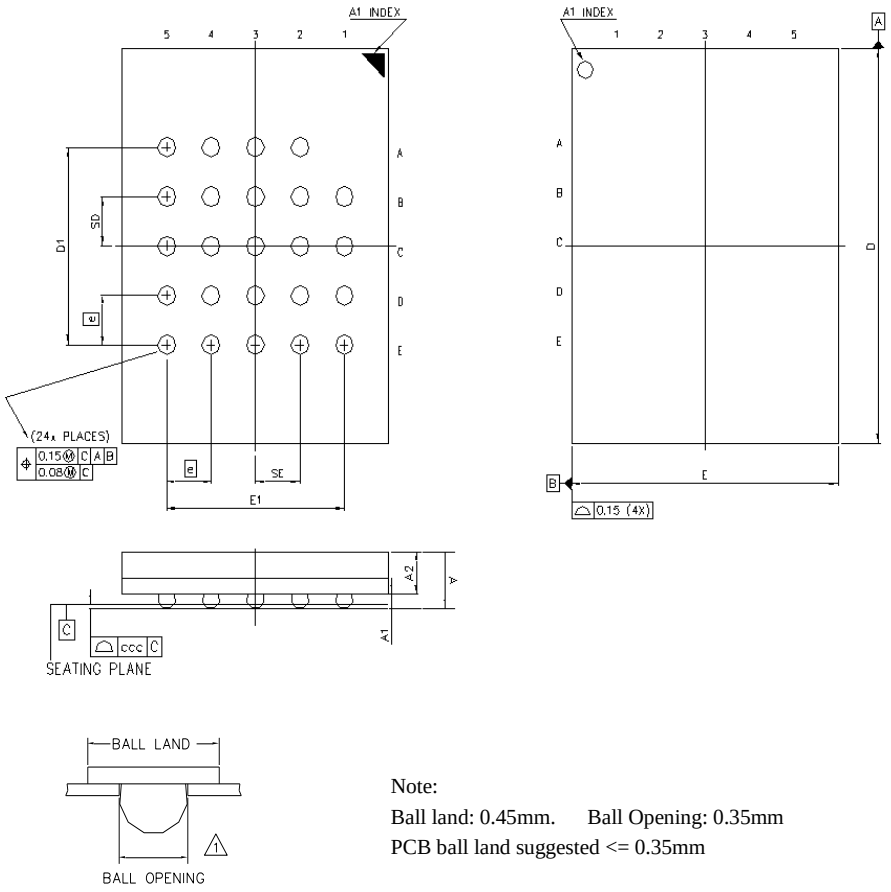

Note:
Ball land: 0.45mm. Ball Opening: 0.35mm
PCB ball land suggested <= 0.35mm

Symbol	Millimeters			Inches		
	Min	Nom	Max	Min	Nom	Max
A	---	---	1.20	---	---	0.047
A1	0.26	0.31	0.36	0.010	0.012	0.014
A2	---	0.85	---	---	0.033	---
b	0.35	0.40	0.45	0.014	0.016	0.018
D	7.90	8.00	8.10	0.311	0.315	0.319
D1	4.00 BSC			0.157 BSC		
E	5.90	6.00	6.10	0.232	0.236	0.240
E1	4.00 BSC			0.157 BSC		
SE	1.00 TYP			0.039 TYP		
SD	1.00 TYP			0.039 TYP		
e	1.00 BSC			0.039 BSC		
ccc	---	---	0.10	---	---	0.0039

8.9 8-Pad VSON 8x6-mm (Package Code ZH)

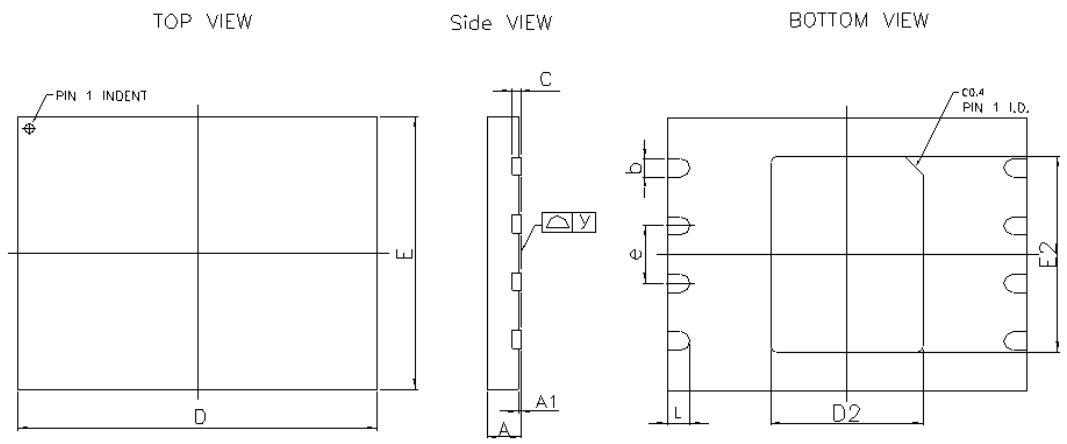

Symbol	Millimeters			Inches		
	Min	Nom	Max	Min	Nom	Max
A	0.90	0.95	1.00	0.035	0.037	0.039
A1	0.00	0.02	0.05	0.000	0.008	0.002
b	0.35	0.40	0.48	0.014	0.016	0.019
C	---	0.20 REF	---	---	0.008 REF	---
D	7.90	8.00	8.10	0.311	0.315	0.319
D2	3.35	3.40	3.45	0.132	0.134	0.136
E	5.90	6.00	6.10	0.232	0.236	0.240
E2	4.25	4.30	4.35	0.167	0.169	0.171
e	1.27 BSC			0.050 BSC		
L	0.45	0.50	0.55	0.018	0.020	0.022
y	0.00	—	0.08	0.000	—	0.003

Note: The metal pad area on the bottom center of the package is not connected to any internal electrical signals. It can be left floating or connected to the device ground (VSS pin). Avoid placement of exposed PCB vias under the pad.

9 ORDERING INFORMATION

W(1) 25Q xxR V x I(1) x

Company Prefix

W = Winbond

Product Family

25Q = SpiFlash Serial Flash Memory with 4KB sectors, Dual/Quad I/O

Product Number / Density

33R	=	32M-bit	25R	=	256M-bit	01R	=	1G-bit
64R	=	64M-bit	51R	=	512M-bit	02R	=	2G-bit
12R	=	128M-bit						

Supply Voltage

V = 2.7V to 3.6V

Package Type

SN/CN	=	8-pin SOP 150-mil	SS/CS	=	8-pin SOP 208-mil
XH	=	8-pad XSON 2x3X0.4-mm	ZP/CP	=	WSON8 6x5-mm
UU	=	8-pad USON 4x3-mm	SF/CF	=	16-pin SOP 300-mil
ZE/CE	=	WSON8 8x6-mm	TB/CB	=	24-ball TFBGA 8x6-mm (5x5 ball array)
XG	=	XSON8 4X4X0.45-MM	ZH	=	8-Pad VSON 8x6-mm

Temperature Range

J = Industrial Plus (-40°C to +105°C)

Special Options(2,3,4,5)

W25Q33/64/12/25/51RV:
- M = With QE = 0 (programmable) in Status register-2 & DRV=50Ω, supporting SPI, QPI and DTR Modes
- Q = With QE = 1 (fixed) in Status register-2 & DRV=50Ω, supporting SPI and QPI Modes.
- N = With QE = 1 (fixed) in Status register-2 & DRV=33Ω, supporting SPI and QPI Modes.

W25Q01RV
- M = With QE = 0 (programmable) in Status register-2 & DRV=33Ω, supporting SPI, QPI and DTR Modes
- Q = With QE = 1 (fixed) in Status register-2 & DRV=33Ω, supporting SPI and QPI Modes.

W25Q02RV
- M = With QE = 0 (programmable) in Status register-2 & DRV=25Ω, supporting SPI, QPI and DTR Modes
- Q = With QE = 1 (fixed) in Status register-2 & DRV=25Ω, supporting SPI and QPI Modes.

Note:

1. The "W" prefix and the Temperature designator "I" are not included on the part marking.
2. Standard bulk shipments are in Tube (shape E). Please specify alternate packing method, such as Tape and Reel (shape T) or Tray (shape S), when placing orders.
3. For shipments with special order options, please contact Winbond.
4. For shipments with OTP feature, please contact Winbond for details.
5. All devices are in compliance of RoHs, Halogen free, TSCA, and REACH.

9.1 Valid Part Numbers and Top Side Marking

The following table provides the valid part numbers for the W25QxxRV SpiFlash Memory. Please contact Winbond for specific availability by density and package type. Winbond SpiFlash memories use a 12-digit Product Number for ordering. However, due to limited space, the Top Side Marking on all packages uses an abbreviated 10-digit number.

W25Q33RV-JQ valid part numbers: Industrial Plus(-40°C to +105°C)

PACKAGE TYPE	DENSITY	PRODUCT NUMBER	TOP SIDE MARKING
SN SOP-8 150mil	32M-bit	W25Q33RVSNJQ	25Q33RVNJQ
SS SOP-8 208-mil	32M-bit	W25Q33RVSSJQ	25Q33RVSJQ
UU USON-8 4x3mm	32M-bit	W25Q33RVUUJQ	Q33RVUUJQ
XG XSON-8 4x4x0.45-mm	32M-bit	W25Q33RVXGJQ	Q33RVXGJQ
ZP WSON-8 6x5-mm	32M-bit	W25Q33RVZPJQ	25Q33RVJQ

W25Q33RV-JM valid part numbers: Industrial Plus(-40°C to +105°C)

PACKAGE TYPE	DENSITY	PRODUCT NUMBER	TOP SIDE MARKING
SN SOP-8 150mil	32M-bit	W25Q33RVSNJM	25Q33RVNJM
SS SOP-8 208-mil	32M-bit	W25Q33RVSSJM	25Q33RVSJM
UU USON-8 4x3mm	32M-bit	W25Q33RVUUJM	Q33RVUUJM
XG XSON-8 4x4x0.45-mm	32M-bit	W25Q33RVXGJM	Q33RVXGJM
ZP WSON-8 6x5-mm	32M-bit	W25Q33RVZPJM	25Q33RVJM

W25Q64RV-JQ valid part numbers: Industrial Plus(-40°C to +105°C)

PACKAGE TYPE	DENSITY	PRODUCT NUMBER	TOP SIDE MARKING
CN SOP-8 150mil	64M-bit	W25Q64RVCNJQ	25Q64RVCNJQ
CS SOP-8 208-mil	64M-bit	W25Q64RVCSJQ	25Q64RVCSJQ
XG XSON-8 4x4x0.45-mm	64M-bit	W25Q64RVXGJQ	Q64RVXGJQ
CP WSON-8 6x5-mm	64M-bit	W25Q64RVCPJQ	25Q64RVCPJQ

W25Q64RV-JM valid part numbers: Industrial Plus(-40°C to +105°C)

PACKAGE TYPE	DENSITY	PRODUCT NUMBER	TOP SIDE MARKING
CN SOP-8 150mil	64M-bit	W25Q64RVCNJM	25Q64RVCNJM
CS SOP-8 208-mil	64M-bit	W25Q64RVCSJM	25Q64RVCSJM
XG XSON-8 4x4x0.45-mm	64M-bit	W25Q64RVXGJM	Q64RVXGJM
CP WSON-8 6x5-mm	64M-bit	W25Q64RVCPJM	25Q64RVCPJM

W25Q12RV-JQ valid part numbers: Industrial Plus(-40°C to +105°C)

PACKAGE TYPE	DENSITY	PRODUCT NUMBER	TOP SIDE MARKING
CF SOP-16 300mil	128M-bit	W25Q12RVCFJQ	W25Q12RVCFJQ
CS SOP-8 208-mil	128M-bit	W25Q12RVCSJQ	W25Q12RVCSJQ
CP WSON-8 6x5-mm	128M-bit	W25Q12RVCPJQ	W25Q12RVCPJQ

W25Q12RV-JM valid part numbers: Industrial Plus(-40°C to +105°C)

PACKAGE TYPE	DENSITY	PRODUCT NUMBER	TOP SIDE MARKING
CF SOP-16 300mil	128M-bit	W25Q12RVCFJM	W25Q12RVCFJM
CS SOP-8 208-mil	128M-bit	W25Q12RVCSJM	W25Q12RVCSJM
CP WSON-8 6x5-mm	128M-bit	W25Q12RVCPJM	W25Q12RVCPJM

W25Q25RV-JQ valid part numbers: Industrial Plus(-40°C to +105°C)

PACKAGE TYPE	DENSITY	PRODUCT NUMBER	TOP SIDE MARKING
CF SOP-16 300mil	256M-bit	W25Q25RVCFJQ	25Q25RVCFJQ
CP WSON-8 6x5-mm	256M-bit	W25Q25RVCPJQ	25Q25RVCPJQ
CB(1) TFBGA-24 8x6-mm (5x5-1 Ball Array)	256M-bit	W25Q25RVCBJQ	25Q25RVCBJQ
CE WSON-8 8x6-mm	256M-bit	W25Q25RVCEJQ	25Q25RVCEJQ

W25Q25RV-JM valid part numbers: Industrial Plus(-40°C to +105°C)

PACKAGE TYPE	DENSITY	PRODUCT NUMBER	TOP SIDE MARKING
CF SOP-16 300mil	256M-bit	W25Q25RVCFJM	25Q25RVCFJM
CP WSON-8 6x5-mm	256M-bit	W25Q25RVCPJM	25Q25RVCPJM
CB(1) TFBGA-24 8x6-mm (5x5-1 Ball Array)	256M-bit	W25Q25RVCBJM	25Q25RVCBJM
CE WSON-8 8x6-mm	256M-bit	W25Q25RVCEJM	25Q25RVCEJM

W25Q51RV-JQ valid part numbers: Industrial Plus(-40°C to +105°C)

PACKAGE TYPE	DENSITY	PRODUCT NUMBER	TOP SIDE MARKING
CF SOP-16 300mil	512M-bit	W25Q51RVCFJQ	25Q51RVCFJQ
CE WSON-8 8x6-mm	512M-bit	W25Q51RVCEJQ	25Q51RVCEJQ
CB TFBGA-24 8x6-mm (5x5-1 Ball Array)	512M-bit	W25Q51RVCBJQ	25Q51RVCBJQ

W25Q51RV-JN valid part numbers: Industrial Plus(-40°C to +105°C)

PACKAGE TYPE	DENSITY	PRODUCT NUMBER	TOP SIDE MARKING
CF SOP-16 300mil	512M-bit	W25Q51RVCFJN	25Q51RVCFJN
CE WSON-8 8x6-mm	512M-bit	W25Q51RVCEJN	25Q51RVCEJN

W25Q51RV-JM valid part numbers: Industrial Plus(-40°C to +105°C)

PACKAGE TYPE	DENSITY	PRODUCT NUMBER	TOP SIDE MARKING
CF SOP-16 300mil	512M-bit	W25Q51RVCFJM	25Q51RVCFJM
CE WSON-8 8x6-mm	512M-bit	W25Q51RVCEJM	25Q51RVCEJM
CB TFBGA-24 8x6-mm (5x5-1 Ball Array)	512M-bit	W25Q51RVCBJM	25Q51RVCBJM

W25Q01RV-JQ valid part numbers: Industrial Plus(-40°C to +105°C)

PACKAGE TYPE	DENSITY	PRODUCT NUMBER	TOP SIDE MARKING
SF SOP-16 300mil	1G-bit	W25Q01RVSFJQ	25Q01RVFJQ
ZE WSON-8 8x6-mm	1G-bit	W25Q01RVZEJQ	25Q01RVJQ
TB TFBGA-24 8x6-mm (5x5 Ball Array)	1G-bit	W25Q01RVTBJQ	25Q01RVBJQ

W25Q01RV-JM valid part numbers: Industrial Plus(-40°C to +105°C)

PACKAGE TYPE	DENSITY	PRODUCT NUMBER	TOP SIDE MARKING
SF SOP-16 300mil	1G-bit	W25Q01RVSFJM	25Q01RVFJM
ZE WSON-8 8x6-mm	1G-bit	W25Q01RVZEJM	25Q01RVJM
TB TFBGA-24 8x6-mm (5x5 Ball Array)	1G-bit	W25Q01RVTBJM	25Q01RVBJM

W25Q02RV-JQ valid part numbers: Industrial Plus(-40°C to +105°C)

PACKAGE TYPE	DENSITY	PRODUCT NUMBER	TOP SIDE MARKING
SF SOP-16 300mil	2G-bit	W25Q02RVSFJQ	25Q02RVFJQ
ZH VSON-8 8x6-mm	2G-bit	W25Q02RVZHJQ	25Q02RVJQ
TB TFBGA-24 8x6-mm (5x5 Ball Array)	2G-bit	W25Q02RVTBJQ	25Q02RVBJQ

W25Q02RV-JM valid part numbers: Industrial Plus(-40°C to +105°C)

PACKAGE TYPE	DENSITY	PRODUCT NUMBER	TOP SIDE MARKING
SF SOP-16 300mil	2G-bit	W25Q02RVSFJM	25Q02RVFJM
ZH VSON-8 8x6-mm	2G-bit	W25Q02RVZHJM	25Q02RVJM
TB TFBGA-24 8x6-mm (5x5 Ball Array)	2G-bit	W25Q02RVTBJM	25Q02RVBJM

Note:

1. These package types are special order, please contact Winbond for more information.
2. USON. has special top side marking due to size limitation
3. “yw” is date code “xxxx” is lot ID

9.2 Initial delivery status

The memory array is delivered in the erased state, where all data bits are set to '1' (FFh per byte). This covers all Part Numbers listed in Section "Valid Part Numbers and Top Side Marking".

10 REVISION HISTORY

VERSION	DATE	PAGE	DESCRIPTION
A01	09/25/2025		New create Preliminary datasheet
A02	10/03/2025	51,96 8,9 151,156 148 173	Update 77h/Set Burst with Wrap instruction flow in 4-byte address mode. Updated /RSTO to /BUSY for SOP16 and TFBGA Updated /BUSY AC timing Updated ICC1 for W25Q01RV and W25Q02RV Updated W25Q02RV-JQ valid part numbers
B	10/09/2025	All	Remove Preliminary information for W25Q51RV, W25Q01RV and W25Q02RV
C	12/05/2025	149-150 151 175 57-59,124-125	Updated Icc3 and with DTR and Icc7 Updated tCLQV Updated ZH package for W25Q02RV Updated: 9Ch in QPI mode supports the C0h dummy setting, while 9Ch in SPI mode does not support C0h
D	01/05/2025	59,82 164 172 176	Updated BDh command table & waveform Updated Note for WSON center-Pad Added W25Q25RVCE Part No Added Initial delivery status
E	02/12/2026	175	Removed duplicate EEh from instruction description Added tCLSH for DTR
		0, 3 , 48-60, 138 140--141,164-166,168-170	W25Q33RV/64RV/12RV: - Removed “Preliminary” - Added command table with operating frequency - Updated ICC1 and tSE (max.) specifications.
		61-71,139 168-169	W25Q25RV/51RV/01RV/02RV - Added command table with operating frequency

Preliminary Designation

The “Preliminary” designation on a *Winbond* datasheet indicates that the product is not fully characterized. The specifications are subject to change and are not guaranteed. *Winbond* or an authorized sales representative should be consulted for current information before using this product.

Trademarks

Winbond and *SpiFlash* are trademarks of *Winbond Electronics Corporation.*
All other marks are the property of their respective owner.

Important Notice

Winbond products are not designed, intended, authorized or warranted for use as components in systems or equipment intended for surgical implantation, atomic energy control instruments, airplane or spaceship instruments, transportation instruments, traffic signal instruments, combustion control instruments, or for other applications intended to support or sustain life. Furthermore, *Winbond* products are not intended for applications wherein failure of *Winbond* products could result or lead to a situation wherein personal injury, death or severe property or environmental damage could occur. *Winbond* customers using or selling these products for use in such applications do so at their own risk and agree to fully indemnify *Winbond* for any damages resulting from such improper use or sales.

Information in this document is provided solely in connection with Winbond products. Winbond reserves the right to make changes, corrections, modifications or improvements to this document and the products and services described herein at any time, without notice.

Please note that all data and specifications are subject to change without notice.
All the trademarks of products and companies mentioned in this datasheet belong to their respective owners.