NOVOSENSE

NSOPA810x
5.5-V Rail-to-Rail Input/Output 10MHz General-Purpose Operational Amplifier

Datasheet (EN) 1.0

Product Overview

The NSOPA810x family includes single (NSOPA8101), dual (NSOPA8102), and quad-channel (NSOPA8104), and is a low-voltage (1.8 V to 5.5 V), general purpose, low-power operational amplifiers (op amps) with rail-to-rail input and output swing capabilities. These op amps provide a cost-effective solution for low-voltage operation and high capacitive-load drive are required. The capacitive-load drive of the NSOPA810x family is 1 nF, and the resistive open-loop output impedance makes stabilization easier with much higher capacitive loads.

The robust design of the NSOPA810x family simplifies circuit design. The op amps feature unity-gain stability, an integrated RFI and EMI rejection filter, and no-phase reversal in overdrive conditions.

Micro-size packages, such as SC70-5, along with industry-standard packages such as SOT23-5L, SOP, MSOP, and TSSOP packages.

Key Features

- Supply voltage range: 1.8V to 5.5V
- Rail-to-rail input and output
- Low input offset voltage: ±0.3 mV (typical)
- Low offset voltage drift: 0.5 μV/°C (typical)
- Gain-bandwidth product: 10 MHz (typical)
- Unity-gain stable
- High power supply rejection: 100dB (typical)
- Low broadband noise: 12 nV/√Hz (typical)
- Low quiescent current: 765μA/ch (typical)
- Internal RFI and EMI filter
- Extended temperature range: –40°C to 125°C
- RoHS and REACH compliance

Device Information

Part Number	*Package*	*Body Size*
NSOPA8101-DSTAR	SOT23-5L	2.90 mm × 1.60 mm
NSOPA8101-DSCAR	SC70-5	2.07 mm × 1.26 mm
NSOPA8102-DSPR	SOP8	4.90 mm × 3.90 mm
NSOPA8102-DMSR	MSOP8	3.00 mm × 3.00 mm
NSOPA8104-DSPKR	SOP14	8.65 mm × 3.90 mm
NSOPA8104-DTSKR	TSSOP14	5.00 mm × 4.40 mm

Typical Application

- Sensor signal conditioning
- Power delivery: UPS/power module/solar
- Industry: inverter/servo/PLC/motor driver
- Low-side current sensing
- ASIC input or output amplifiers

Copyright © 2025, NOVOSENSE

INDEX

1. PIN CONFIGURATION AND FUNCTION 3
2. ABSOLUTE MAXIMUM RATINGS 6
3. ESD RATINGS 6
4. RECOMMENDED OPERATING CONDITIONS 6
5. THERMAL INFORMATION 6
6. ELECTRICAL CHARACTERISTICS 7
7. TYPICAL PERFORMANCE CHARACTERISTICS 10
8. DETAILED DESCRIPTION 17
8.1 OVERVIEW 17
8.2 FUNCTION BLOCK 17
8.3 FEATURE DESCRIPTION 17
8.3.1 COMMON-MODE INPUT STAGE 17
8.3.2 SLEW RATE BOOST 18
8.3.4 DRIVE CAPACITIVE LOAD 18
8.3.5 ELECTRICAL OVERSTRESS 19
9. APPLICATION INFORMATION 21
9.1 ACTIVE FILTER 21
9.2 LOW-SIDE CURRENT SENSING APPLICATION 22
10. LAYOUT GUIDELINES 23
10.1 GUIDELINES 23
10.2 EXAMPLE 23
11. PACKAGE INFORMATION 24
SOT23-5L 24
SC70-5 25
SOP8 26
MSOP8 27
SOP14 28
TSSOP14 29
EXAMPLE OF SOLDER PADS DIMENSIONS 30
12. ORDER INFORMATION 33
13. TAPE AND REEL INFORMATION 34
14. REVISION HISTORY 35

Copyright © 2025, NOVOSENSE

1. Pin Configuration and Function

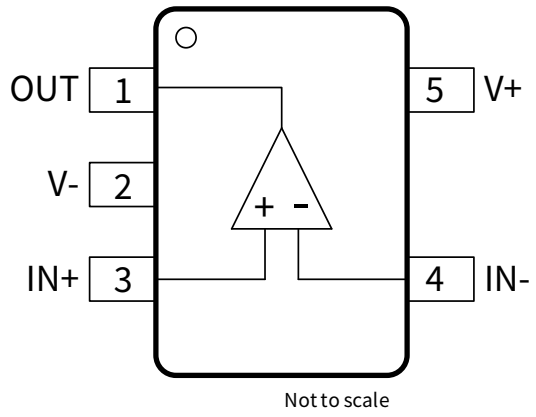

Figure 1-1 NSOPA8101 5-Pin SOT23 Package Top View

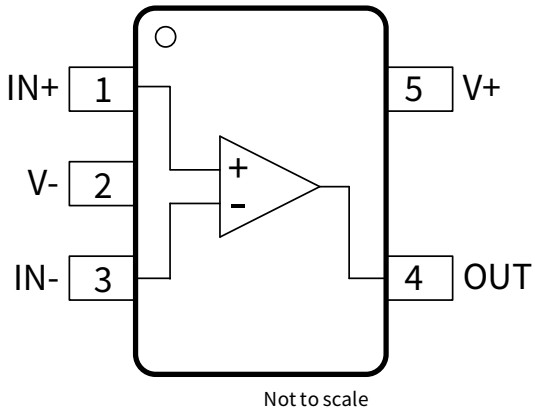

Figure 1-2 NSOPA8101 5-Pin SC70 Package Top View

Table 1-1 NSOPA8101 Pin Configuration and Description

Symbol	*No.*		*Function*
	5-Pin SOT23	**5-Pin SC70**	
IN+	3	1	Noninverting Input
IN-	4	3	Inverting Input
OUT	1	4	Output
V+	5	5	Positive Power Supply
V-	2	2	Negative Power Supply

Copyright © 2025, NOVOSENSE

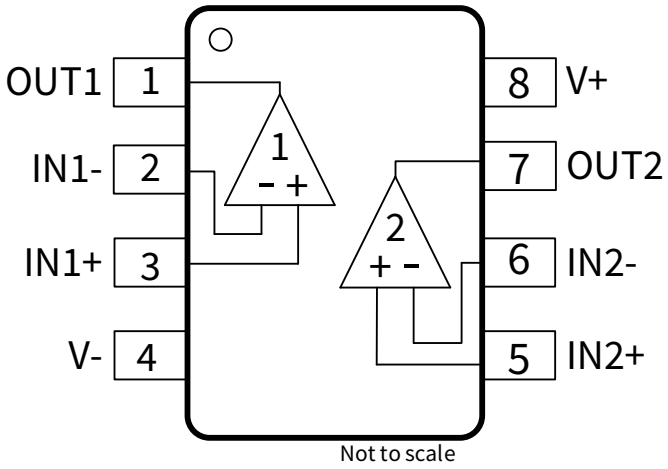

Figure 1-3 NSOPA8102 8-Pin SOP and MSOP Package Top View

Table 1-2 NSOPA8102 Pin Configuration and Description

Symbol	*No.*	*Function*
IN1–	2	Channel 1 Inverting Input
IN1+	3	Channel 1 Noninverting Input
OUT1	1	Channel 1 Output
IN2–	6	Channel 2 Inverting Input
IN2+	5	Channel 2 Noninverting Input
OUT2	7	Channel 2 Output
V+	8	Positive Power Supply
V-	4	Negative Power Supply

Copyright © 2025, NOVOSENSE

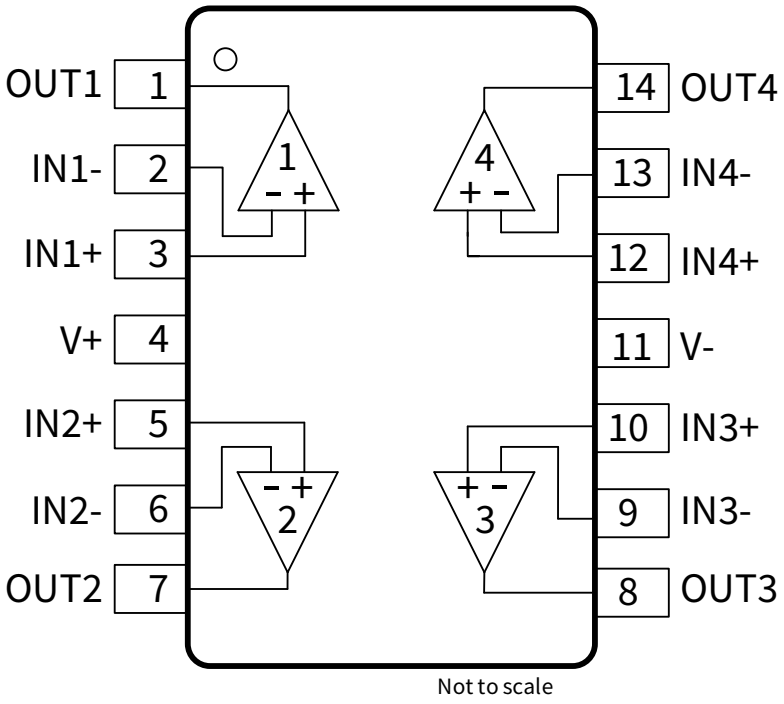

Figure 1-4 NSOPA8104 14-Pin SOP and TSSOP Package Top View

Table 1-3 NSOPA8104 Pin Configuration and Description

Symbol	*No.*	*Function*
IN1–	2	Channel 1 Inverting Input
IN1+	3	Channel 1 Noninverting Input
OUT1	1	Channel 1 Output
IN2–	6	Channel 2 Inverting Input
IN2+	5	Channel 2 Noninverting Input
OUT2	7	Channel 2 Output
IN3–	9	Channel 3 Inverting Input
IN3+	10	Channel 3 Noninverting Input
OUT3	8	Channel 3 Output
IN4–	13	Channel 4 Inverting Input
IN4+	12	Channel 4 Noninverting Input
OUT4	14	Channel 4 Output
V+	4	Positive Power Supply
V-	11	Negative Power Supply

Copyright © 2025, NOVOSENSE

2. Absolute Maximum Ratings[1]

Parameters	Symbol	Min	Max	Unit
Supply voltage $V_S = (V_+) - (V_-)$	V_S	-0.3	7	V
Differential, IN+ to IN− inputs			V_S + 0.2	V
Common-Mode input voltage		(V_-) - 0.5	(V_+) + 0.5	V
Pins Input current		−10	10	mA
Junction temperature	T_J		150	°C
Storage temperature	T_{stg}	−55	150	°C

3. ESD Ratings

Ratings		Value	Unit
Electrostatic discharge	● Human body model (HBM), per ANSI/ESDA/JEDEC JS-001	±6000	V
	● Charged device model (CDM), per JEDEC specification JESD22-C101	±2000	V

4. Recommended Operating Conditions

Parameters	Symbol	Min	Max	Unit
Supply voltage	V_S	1.8	5.5	V
Operating free-air temperature	T_A	-40	125	°C

5. Thermal Information

Parameters	Symbol	SOT23-5L	SC70-5	SOP8	MSOP8	SOP14	TSSOP14	Unit
IC Junction-to-Air Thermal Resistance	θ_{JA}	232.9	239.6	207.9	201.2	102.1	148.3	°C/W
Junction-to-case (top) thermal resistance	$\theta_{JC(TOP)}$	153.8	148.5	92.8	85.7	56.8	68.1	°C/W
Junction-to-board thermal resistance	θ_{JB}	100.9	82.3	129.7	122.9	58.5	92.7	°C/W
Junction-to-top characterization parameter	Ψ_{JT}	77.2	54.5	26	21.2	20.5	16.9	°C/W
Junction-to-board characterization parameter	Ψ_{JB}	100.4	81.8	127.9	121.4	58.1	91.8	°C/W

[1] Stresses at or above those listed under Absolute Maximum Ratings may cause permanent damage to the product. This is a stress rating only; functional operation of the product at these or any other conditions above those indicated in the operational section of this specification is not implied. Operation beyond the maximum operating conditions for extended periods may affect product reliability

Copyright © 2025, NOVOSENSE

6. Electrical Characteristics

For V_S = (V_+) – (V_-) = 1.8 V to 5.5 V (±0.9 V to ±2.75 V) at T_A = 25 °C, R_L = 10 kΩ connected to V_S/2, V_{CM} = V_S/2, and V_{OUT} = V_S/2, unless otherwise noted.

Parameters	Symbol	Condition		Min	Typ	Max	Unit
INPUT							
Offset voltage	V_{OS}	V_S = 5.5 V	T_A = 25°C		±0.3	±1.9	mV
			T_A = –40°C to 125°C[1]			±2.0	
Offset voltage Drift	dV_{OS}/dT	T_A = –40 °C to 125 °C[1]			±0.5		µV/°C
Common-mode input range	V_{CM}			(V_-)-0.1		(V_+)+0.1	V
Common mode rejection ratio	CMRR	V_S = 1.8 V, (V_-) – 0.1 V < V_{CM} < (V_+) – 1.4 V (PMOS pair)	T_A = 25°C		89		dB
			T_A = –40°C to 125°C[1]		74		
		V_S = 5.5 V, (V_-) – 0.1 V < V_{CM} < (V_+) - 1.4 V (PMOS pair)	T_A = 25°C	83	98		
			T_A = –40°C to 125°C[1]	81			
		V_S = 1.8 V, (V_-) – 0.1 V < V_{CM} < (V_+) + 0.1 V	T_A = 25°C		66		
			T_A = –40°C to 125°C[1]		64		
		V_S = 5.5 V, (V_-) – 0.1 V < V_{CM} < (V_+) + 0.1 V	T_A = 25°C	59	75		
			T_A = –40°C to 125°C[1]	57			
Channel Separation		f = 0Hz			120		dB
Input bias current	I_B	V_S = 1.8 V to 5.5 V, V_{CM} = V_S/2			±5		pA
Input offset current	I_{OS}	V_S = 1.8 V to 5.5 V, V_{CM} = V_S/2			±5		
Input Impedance	Z_{ID}	Differential			0.03||4		TΩ||pF
	Z_{ICM}	Common-mode			1.8||5		
OPEN-LOOP GAIN							
Open-loop voltage gain	A_{OL}	V_S = 1.8V, R_L=10kΩ, (V_-)+0.05V<V_O<(V_+)-0.05V			111		dB
		V_S = 5.5V, R_L=10kΩ, (V_-)+0.05V<V_O<(V_+)-0.05V		108	120		
		V_S = 1.8V, R_L=2kΩ, (V_-)+0.15V<V_O<(V_+)–0.15V			106		
		V_S = 5.5V, R_L=2kΩ, (V_-)+0.15V<V_O<(V_+)–0.15V			117		
OUTPUT							
Output swing from rail headroom	V_O	V_S=1.8 V, R_L=10 kΩ			2	15	mV
		V_S=5.5 V, R_L=10 kΩ			5	20	
		V_S=1.8 V, R_L=2 kΩ			6	20	
		V_S=5.5 V, R_L=2 kΩ			20	40	
Short-Circuit Current	I_{SC}	V_S=5.5 V, Sinking			60		mA
		V_S=5.5 V, Sourcing			54		

[1] Specified by characterization only.

Copyright © 2025, NOVOSENSE

Open-loop Output Impedance	Z_O	V_S = 5 V, f = 1 MHz, I_O = 0 A	100	Ω

Copyright © 2025, NOVOSENSE

Electrical Characteristics (continued)

For V_S = (V_+) – (V_-) = 1.8 V to 5.5 V (±0.9 V to ±2.75 V) at T_A = 25°C, R_L = 10 kΩ connected to V_S/2, V_{CM} = V_S/2, and V_{OUT} = V_S/2, unless otherwise noted.

Parameters	Symbol	Condition		Min	Typ	Max	Unit
FREQUENCY RESPONSE							
Gain-bandwidth product	GBP	V_S = 5.5 V, C_L = 10 pF			10		MHz
Phase margin	PM	V_S = 5.5 V, C_L = 10 pF			64		Degree
Settling time	T_S	To 0.1%, V_S = 5 V, 2 V Step, C_L = 100 pF			0.4		µs
		To 0.01%, V_S = 5 V, 2 V Step, C_L = 100 pF			0.7		
Slew rate	SR	V_S = 5.5 V, 4V step, G= +1, Rising			20		V/µs
		V_S = 5.5 V, 4V step, G= +1, Falling			16		
Total harmonic distortion + noise	THD+N	V_{rms} = 0.5 V, G = 1, f = 1 kHz, R_L= 10kΩ			104		dB
Overload recovery time		V_{IN} × Gain > V_S			0.2		µs
EMI rejection ratio	EMIRR	f = 1GHz			59		dB
NOISE (INPUT REFERRED)							
Input voltage noise density	e_n	f = 1 kHz			12		nV/$\sqrt{Hz}$
		f = 10 kHz			10		
Input Voltage noise	$e_{n\ p\text{-}p}$	f = 0.1 Hz to 10 Hz			2.0		µVpp
POWER SUPPLY							
Operating voltage range	V_S			1.8		5.5	V
Power supply rejection ratio	PSRR	V_S = 1.8 V to 5.5 V, V_{CM} = (V-)	T_A = 25°C	85	100		dB
			T_A = –40 °C to 125 °C[1]	82			
Quiescent current per amplifier	I_Q	V_S=1.8 V	T_A = 25°C		510	840	µA
			T_A = –40 °C to 125 °C[1]			1050	
		V_S=1.8 V NSOPA8101	T_A = 25°C		1020	1680	
			T_A = –40 °C to 125 °C[1]			2100	
		V_S=5.5 V	T_A = 25°C		765	1295	
			T_A = –40 °C to 125 °C[1]			1450	
		V_S=5.5 V NSOPA8101	T_A = 25°C		1530	2590	
			T_A = –40 °C to 125 °C[1]			2900	

[1] Specified by characterization only.

Copyright © 2025, NOVOSENSE

7. Typical Performance Characteristics

For $V_S = (V_+) - (V_-) = 5.5$ V (±2.75 V) at $T_A = 25°C$, $R_L = 10$ kΩ connected to $V_S/2$, $V_{CM} = V_S/2$, and $V_{OUT} = V_S/2$, unless otherwise noted.

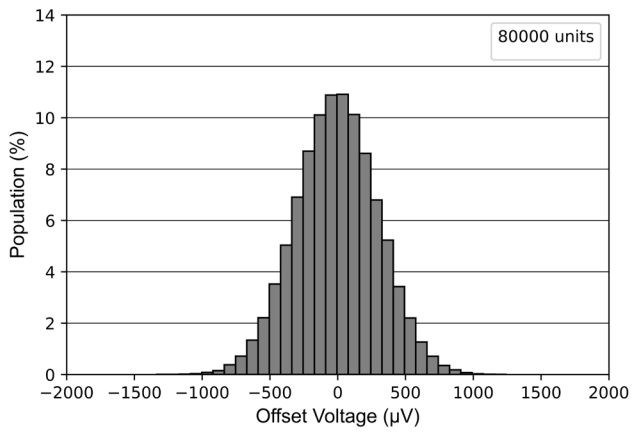

Figure 7-1 Offset Voltage Production Distribution

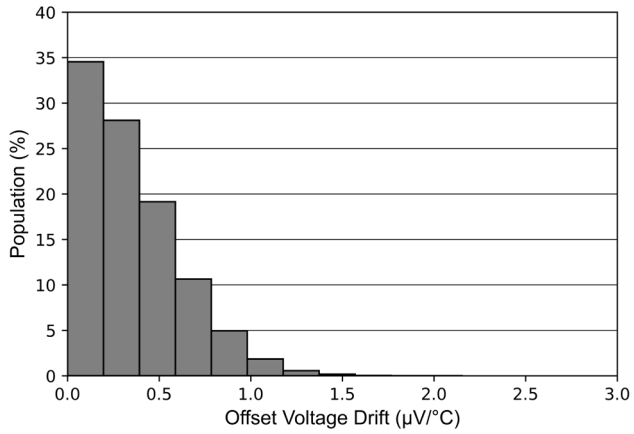

Figure 7-2 Offset Voltage Drift Distribution

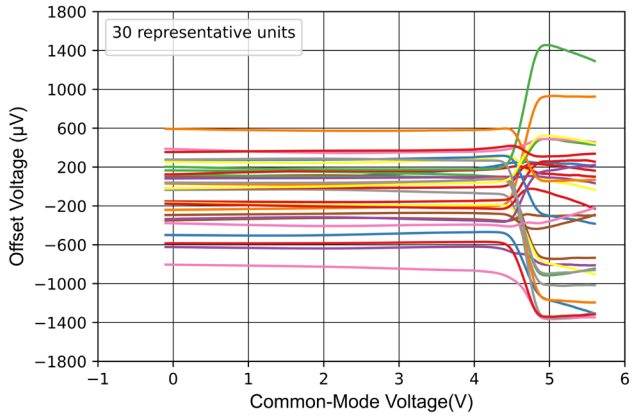

Figure 7-3 Offset Voltage vs Common-Mode Voltage

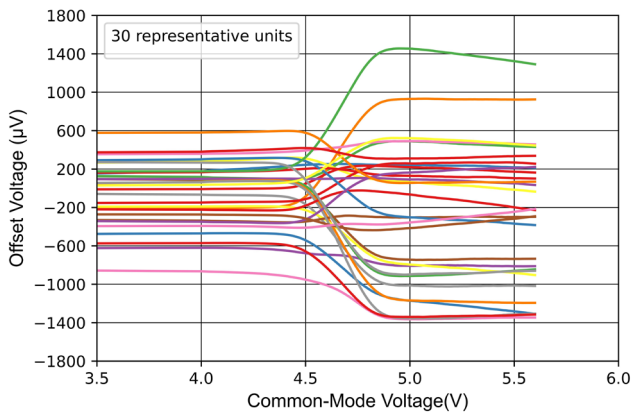

Figure 7-4 Offset Voltage vs Common-Mode Voltage(Transition)

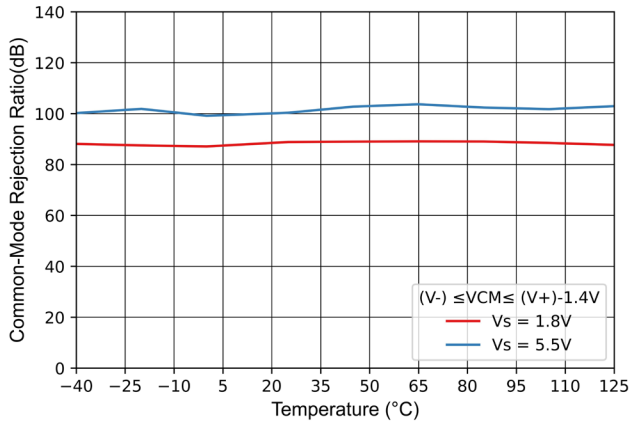

Figure 7-5 Common-Mode Rejection Ratio vs Temperature

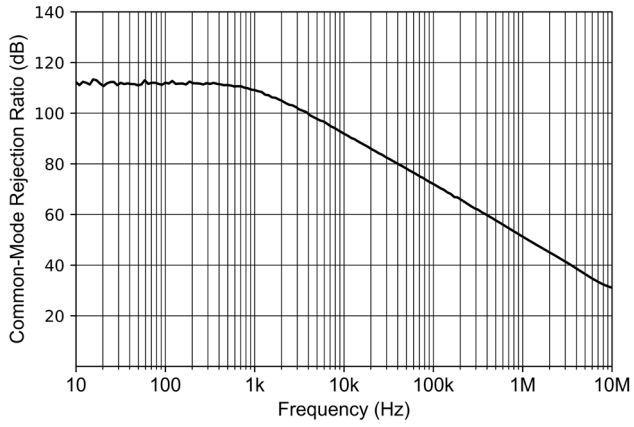

Figure 7-6 Common-Mode Rejection Ratio vs Frequency

Copyright © 2025, NOVOSENSE

Typical Performance Characteristics (continued)

For $V_S = (V_+) - (V_-) = 5.5$ V (±2.75 V) at $T_A = 25°C$, $R_L = 10$ kΩ connected to $V_S/2$, $V_{CM} = V_S/2$, and $V_{OUT} = V_S/2$, unless otherwise noted.

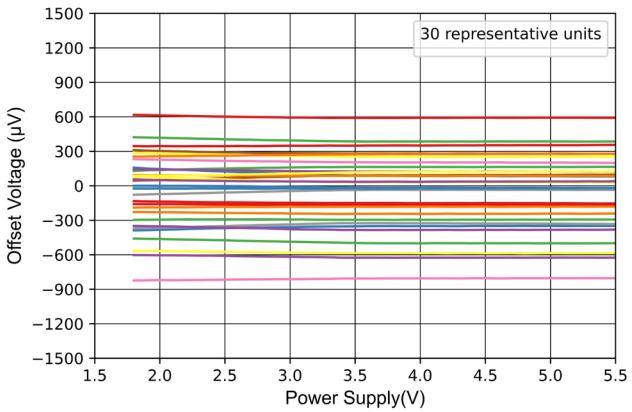

Figure 7-7 Offset Voltage vs Power Supply

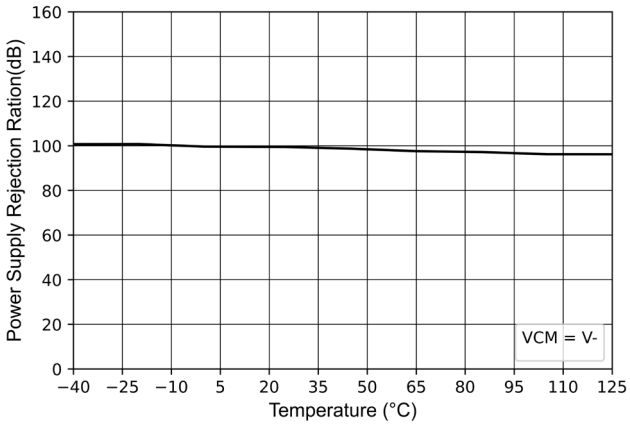

Figure 7-8 Power-Supply Rejection Ratio vs Temperature

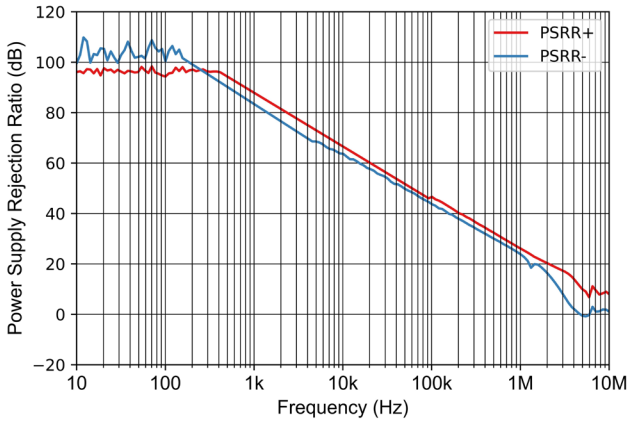

Figure 7-9 Power-Supply Rejection Ratio vs Frequency

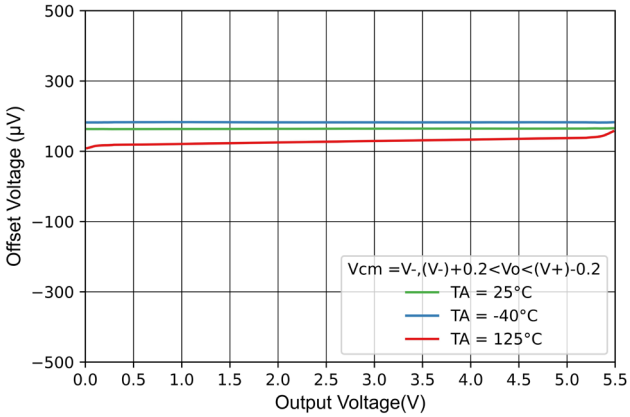

Figure 7-10 Offset Voltage vs Output Voltage

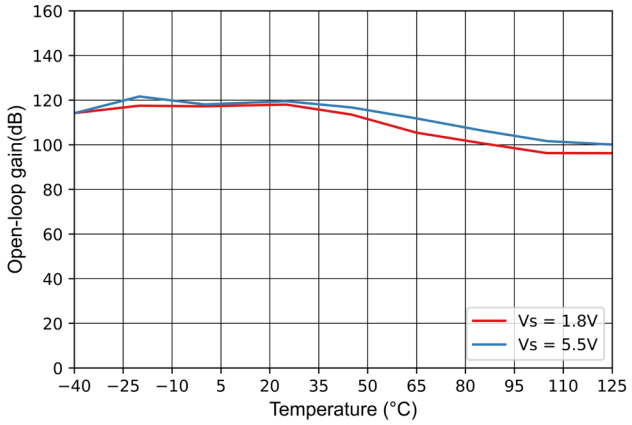

Figure 7-11 Open Loop Gain vs Temperature

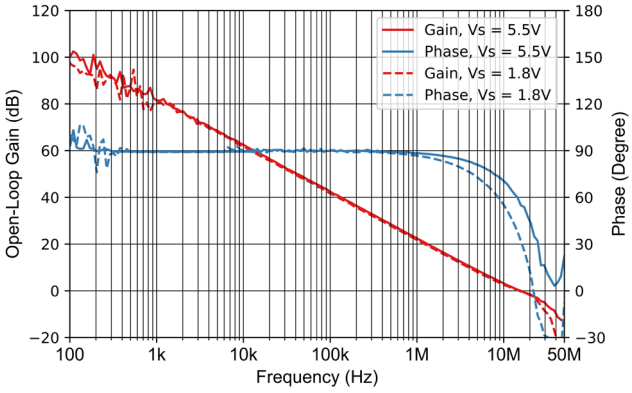

Figure 7-12 Open Loop Gain vs Frequency

Copyright © 2025, NOVOSENSE

Typical Performance Characteristics (continued)

For $V_S = (V_+) - (V_-) = 5.5$ V (±2.75 V) at $T_A = 25°C$, $R_L = 10$ kΩ connected to $V_S/2$, $V_{CM} = V_S/2$, and $V_{OUT} = V_S/2$, unless otherwise noted.

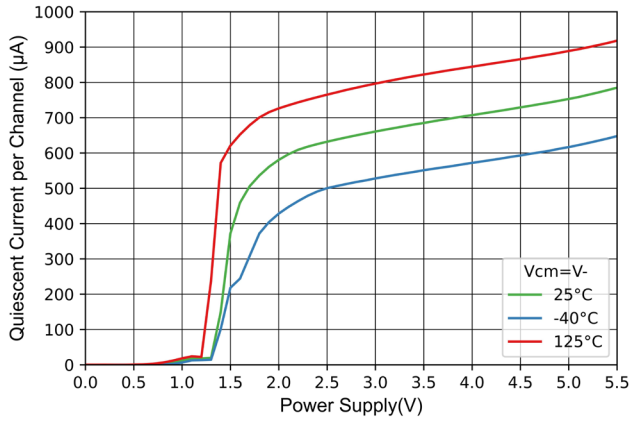

Figure 7-13 Quiescent Current vs Supply Voltage

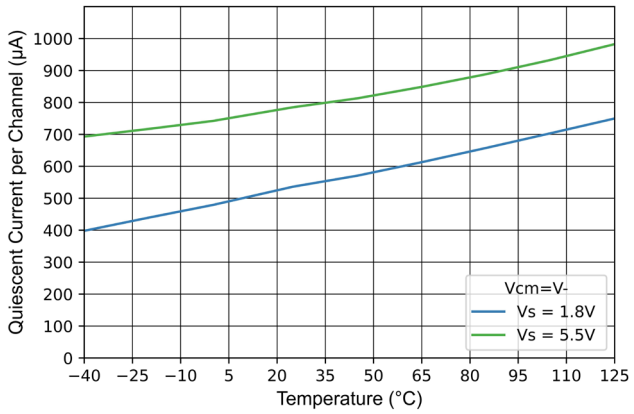

Figure 7-14 Quiescent Current vs Temperature

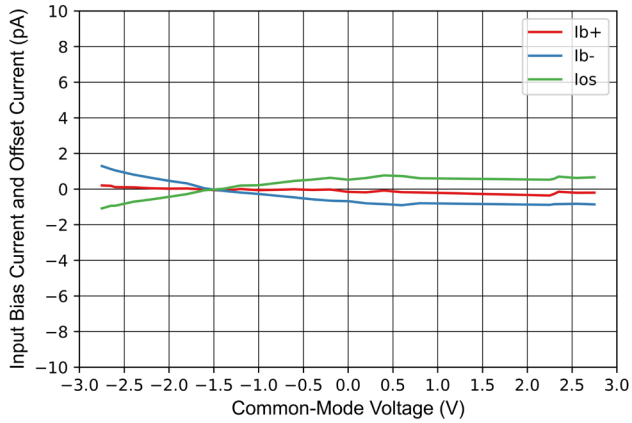

Figure 7-15 Input Bias Current vs Common-Mode Voltage

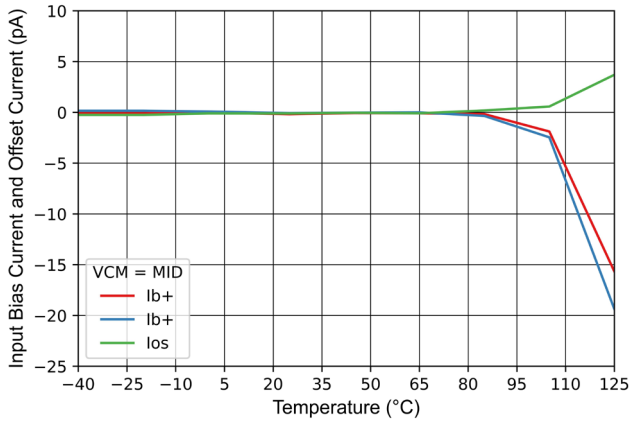

Figure 7-16 Input Bias Current vs Temperature

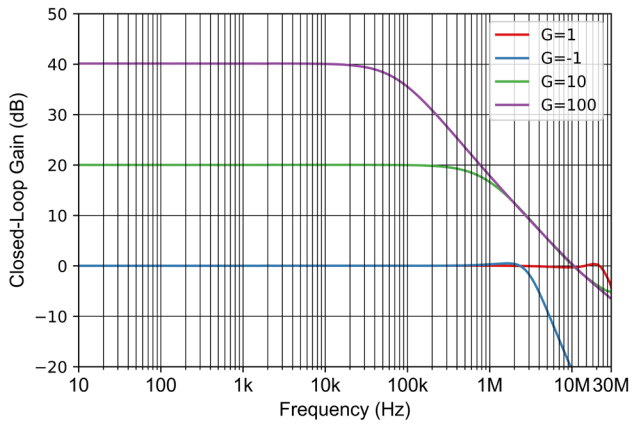

Figure 7-17 Closed Loop Gain vs Frequency

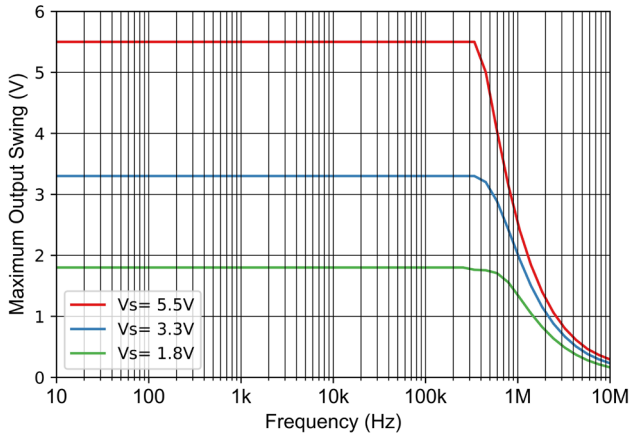

Figure 7-18 Maximum Output Voltage vs Frequency

Copyright © 2025, NOVOSENSE

Typical Performance Characteristics (continued)

For $V_S = (V_+) - (V_-) = 5.5$ V (±2.75 V) at $T_A = 25°C$, $R_L = 10$ kΩ connected to $V_S/2$, $V_{CM} = V_S/2$, and $V_{OUT} = V_S/2$, unless otherwise noted.

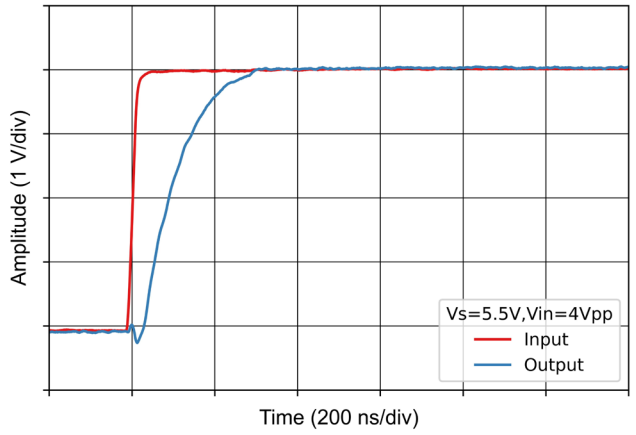

Figure 7-19 Large-Signal Step Response (Rising)

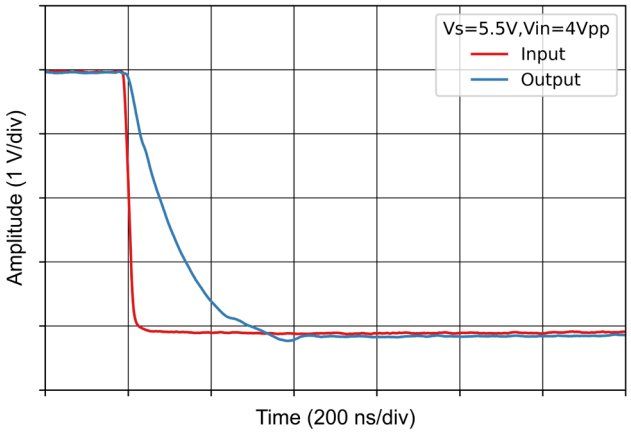

Figure 7-20 Large-Signal Step Response (Falling)

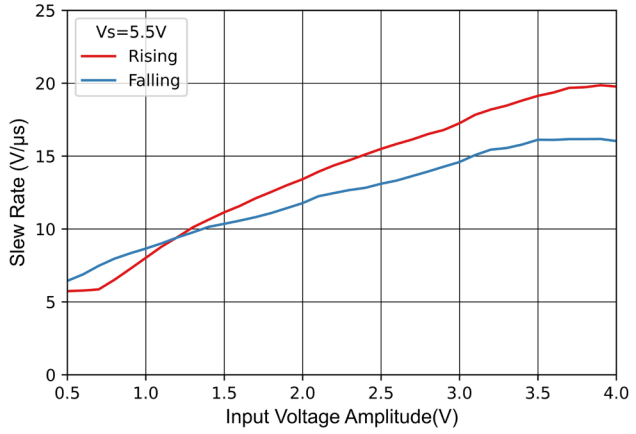

Figure 7-21 Slew Rate vs Input Voltage Amplitude

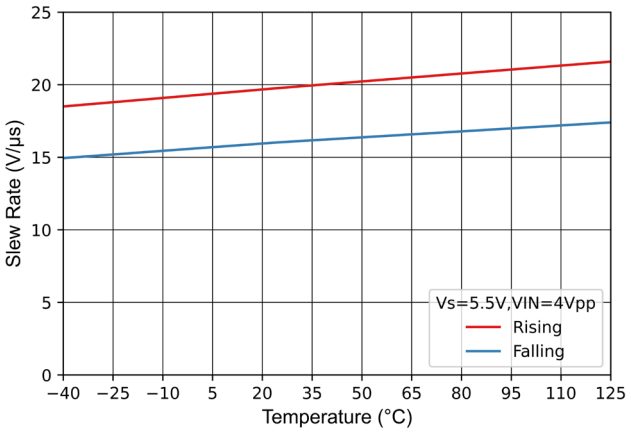

Figure 7-22 Slew Rate vs Temperature

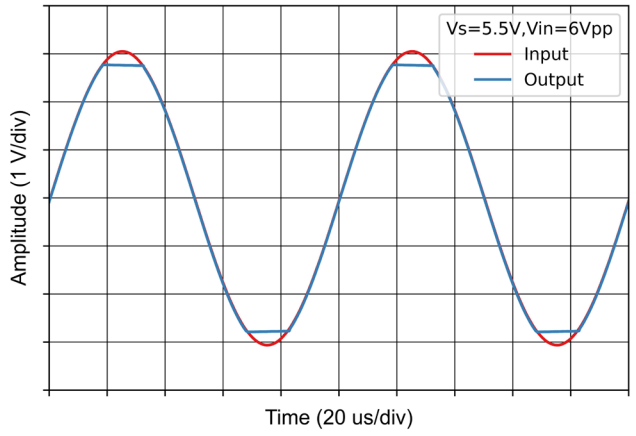

Figure 7-23 No Phase Reversal

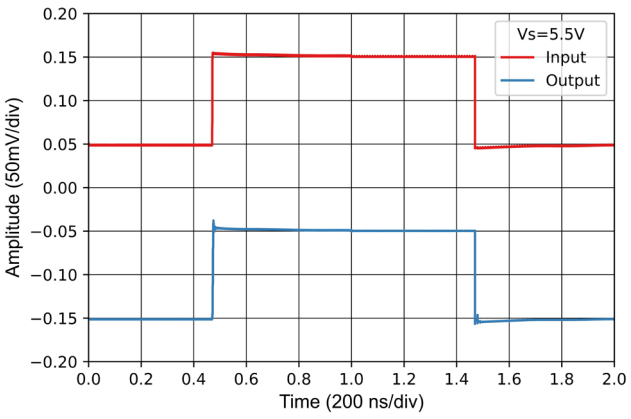

Figure 7-24 Small-Signal Step Response

Copyright © 2025, NOVOSENSE

Typical Performance Characteristics (continued)

For $V_S = (V_+) - (V_-) = 5.5$ V (±2.75 V) at $T_A = 25°C$, $R_L = 10$ kΩ connected to $V_S/2$, $V_{CM} = V_S/2$, and $V_{OUT} = V_S/2$, unless otherwise noted.

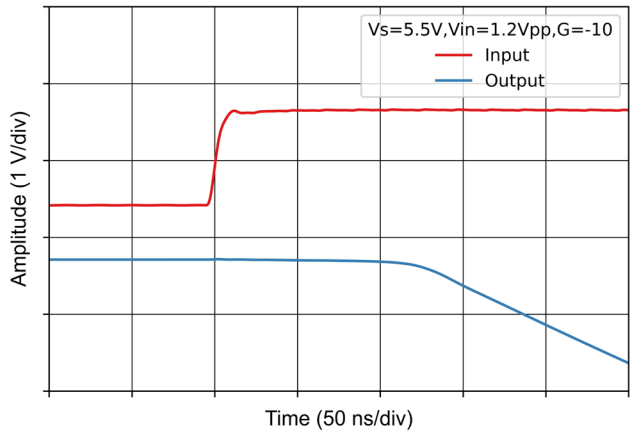

Figure 7-25 Positive Overload Recovery (G=-10)

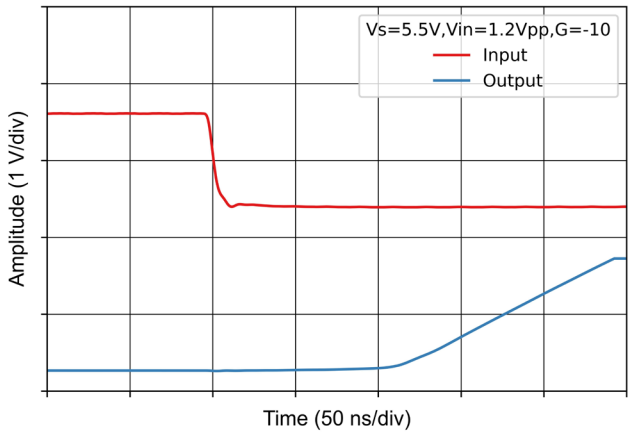

Figure 7-26 Negative Overload Recovery (G=-10)

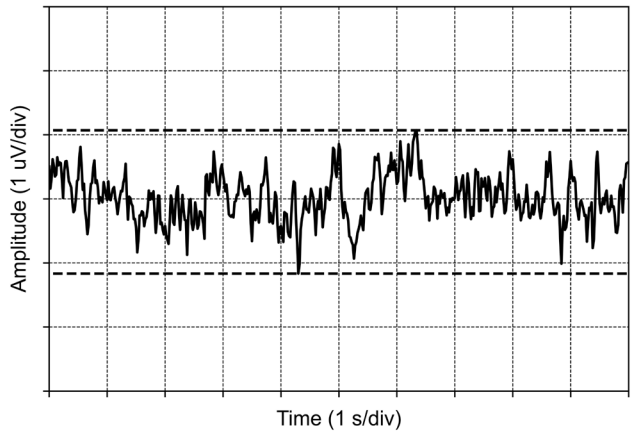

Figure 7-27 0.1-Hz to 10-Hz Noise

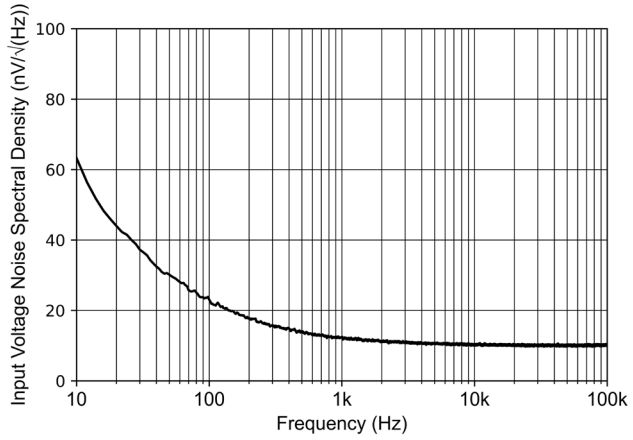

Figure 7-28 Input Voltage Noise Spectral Density

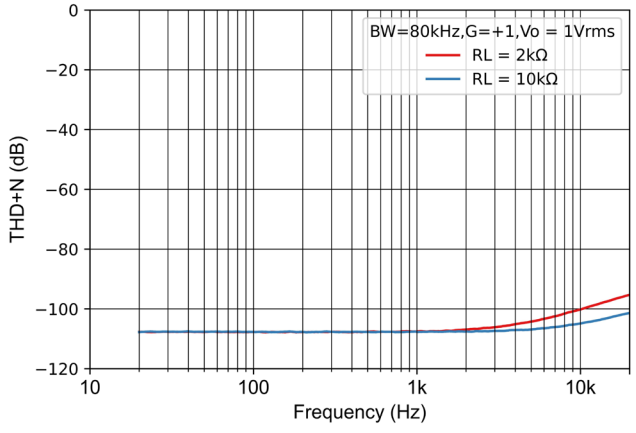

Figure 7-29 THD+N Ratio vs Frequency

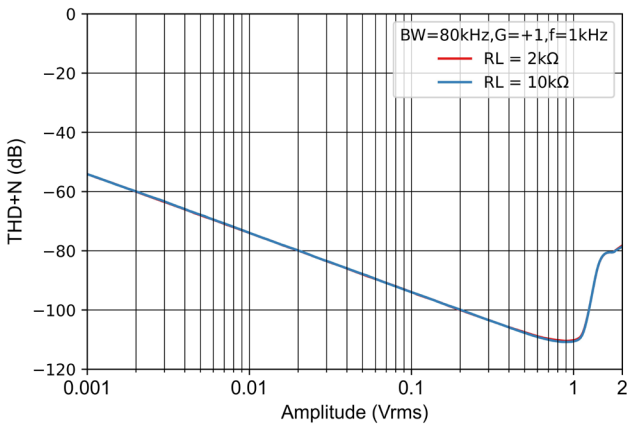

Figure 7-30 THD+N vs Output Amplitude

Copyright © 2025, NOVOSENSE

Typical Performance Characteristics (continued)

For $V_S = (V_+) - (V_-) = 5.5$ V (±2.75 V) at $T_A = 25°C$, $R_L = 10$ kΩ connected to $V_S/2$, $V_{CM} = V_S/2$, and $V_{OUT} = V_S/2$, unless otherwise noted.

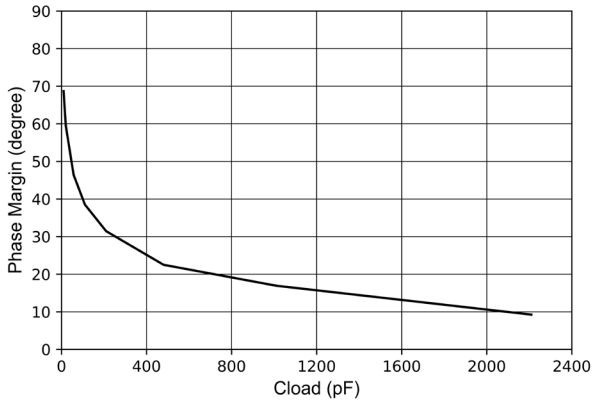

Figure 7-31 Phase Margin vs Capacitive Load

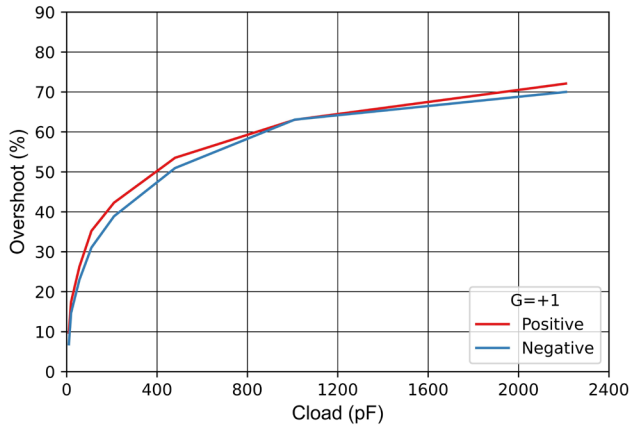

Figure 7-32 Small-Signal Overshoot vs Capacitive Load

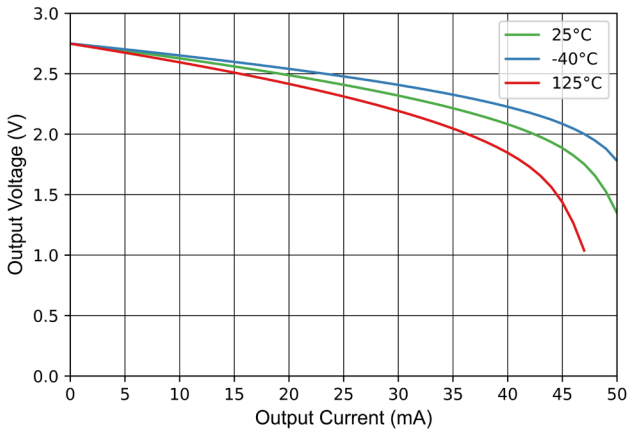

Figure 7-33 Output Voltage Swing vs Output Sourcing Current

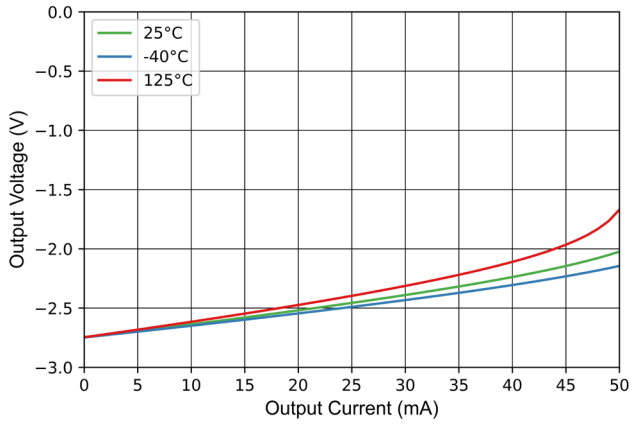

Figure 7-34 Output Voltage Swing vs Output Sinking Current

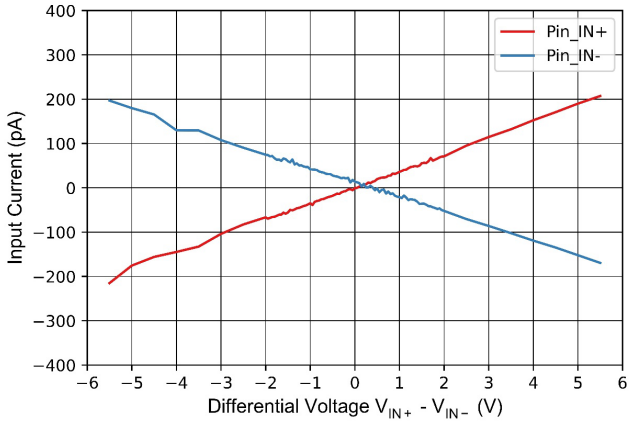

Figure 7-35 Input Current vs Differential Voltage

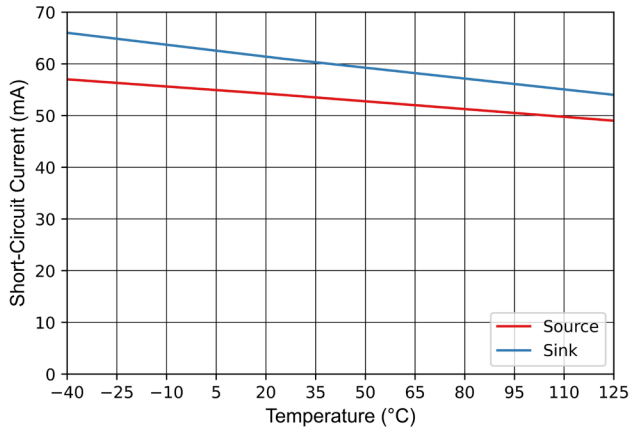

Figure 7-36 Short-Circuit vs Temperature

Copyright © 2025, NOVOSENSE

Typical Performance Characteristics (continued)

For $V_S = (V_+) - (V_-) = 5.5$ V (±2.75 V) at $T_A = 25°C$, $R_L = 10$ kΩ connected to $V_S/2$, $V_{CM} = V_S/2$, and $V_{OUT} = V_S/2$, unless otherwise noted.

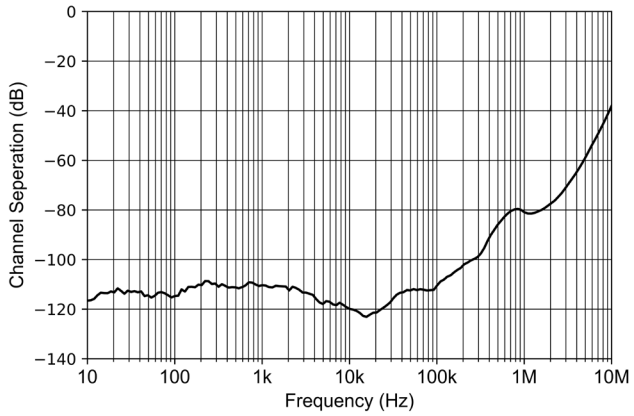

Figure 7-37 Channel Separation vs Frequency

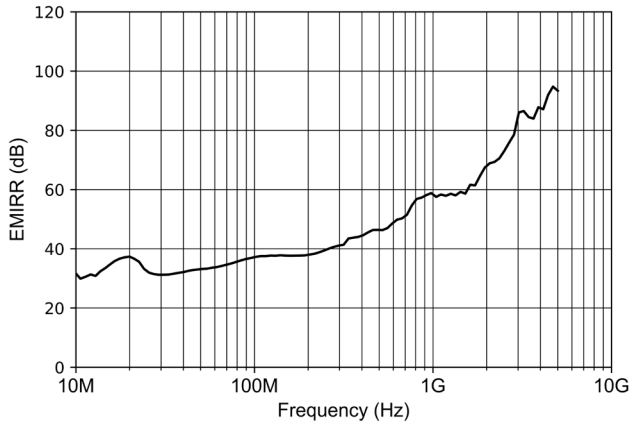

Figure 7-38 EMIRR vs Frequency

Copyright © 2025, NOVOSENSE

8. Detailed Description

8.1 Overview

The NSOPA810x is a family of rail-to-rail input and output op amps. These devices operate from 1.8 V to 5.5 V, are unity-gain stable, and are designed for a wide range of general-purpose applications. The input common-mode voltage range includes both rails and allows the NSOPA810x family to be used in virtually any single-supply application.

8.2 Function Block

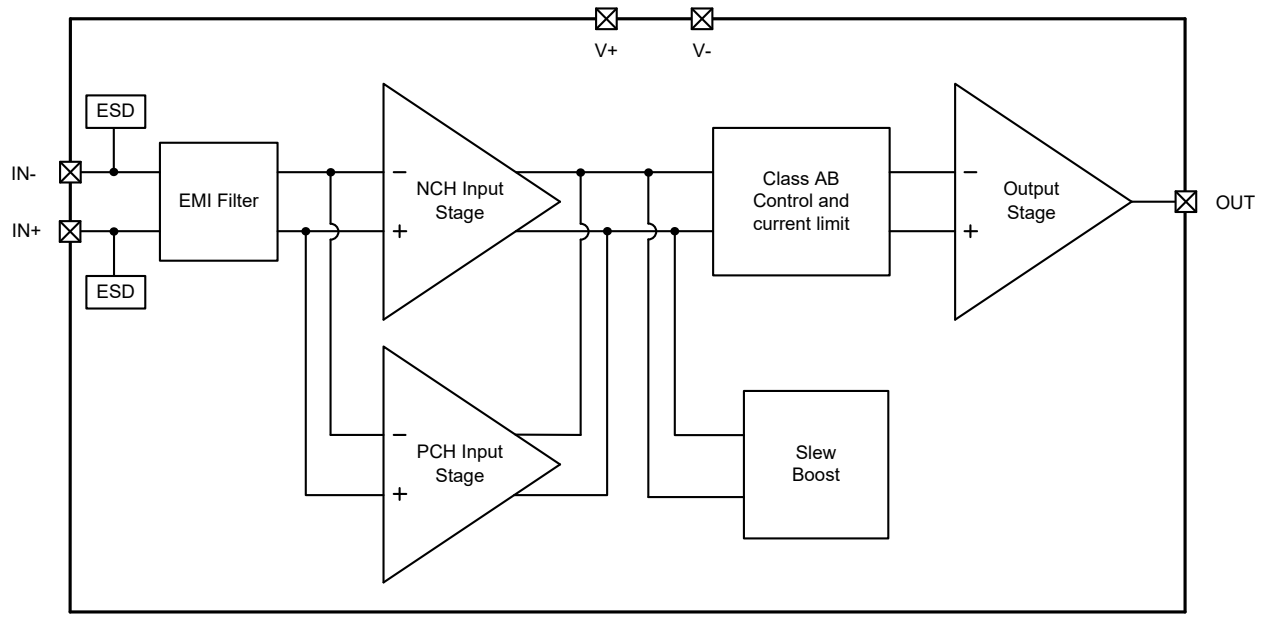

Figure 8-1 NSOPA810x Functional block Diagram (One channel is shown)

8.3 Feature Description

8.3.1 Common-Mode Input Stage

The NSOPA810x is a 5.5V true rail-to-rail input op amp with an input common-mode range of 200mV beyond either supply rail. This wide range is achieved by paralleling complementary N-channel and P-channel differential input pairs, as shown in Figure 8-2.

N-channel pairs are active when the input voltage is close to the positive power rail, typically ranging from 200 mV higher than the positive power (V+) to 500 mV lower than (V+). The P-channel pair is active over an input range from 200 mV below the negative supply to approximately (V+) – 1.0 V. There is a small transition region, typically (V+) – 1.0 V to (V+) – 0.5 V, where both input pairs are on. This transition region will vary slightly with process variations, and within this region, PSRR, CMRR, offset voltage, offset drift, bias current, noise, and THD performance may be degraded compared to operation outside this region.

Copyright © 2025, NOVOSENSE

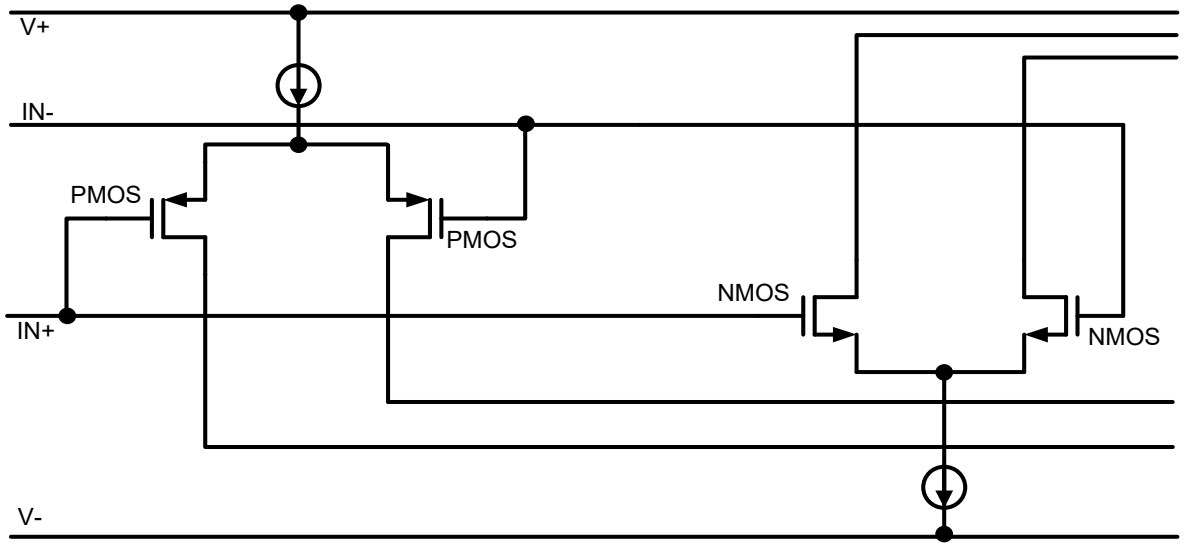

Figure 8-2 Rail-to-rail Input Stage

8.3.2 Slew Rate Boost

NSOPA810x has internal SR boost block. The boost circuit can provide positive and negative current flow to boost both positive and negative slew rates. Actually, the slew rate of device depends on the input amplitude voltage. Figure 8-3 illustrates the behavior of this feature.

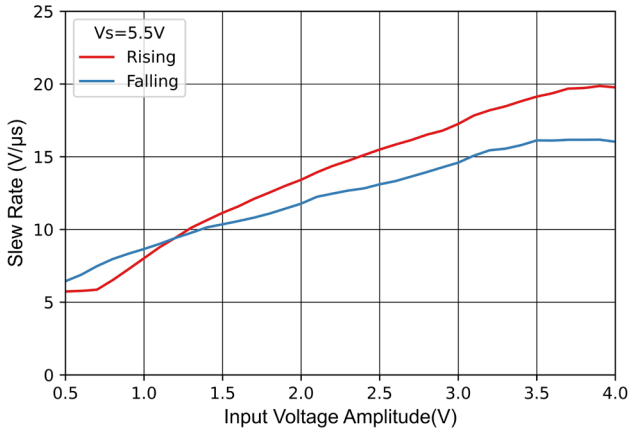

Figure 8-3 Slew-Rate vs Input Voltage Amplitude

8.3.4 Drive Capacitive Load

The NSOPA810x has a resistive output stage capable of driving moderate capacitive loads, and by utilizing isolation resistors, the device can be easily configured to drive large capacitive loads. The specific OP amp circuit configuration, layout, gain, and output loading are important factors in determining whether the amplifier will operate stably Some factors to consider.

To obtain additional drive capability in a unity-gain configuration, capacitive load drive can be improved by inserting a small resistor, R_{ISO}, in series with the output. This resistor significantly reduces ringing and maintains DC performance under purely capacitive loads. However, if a resistive load is placed in parallel with a capacitive load, a voltage divider is created, which introduces a gain error at the output and slightly reduces the output swing. The error introduced is proportional to the ratio R_{ISO}/R_L and is usually

Copyright © 2025, NOVOSENSE

negligible at low voltage output levels. High capacitive load drive makes the NSOPA810x ideally suited for applications such as reference buffers, MOSFET gate drives, and cable shield drives. The circuit shown in Figure 8-4 uses an isolation resistor R_{ISO} to stabilize the op amp output. R_{ISO} modifies the open-loop gain of the system to increase phase margin.

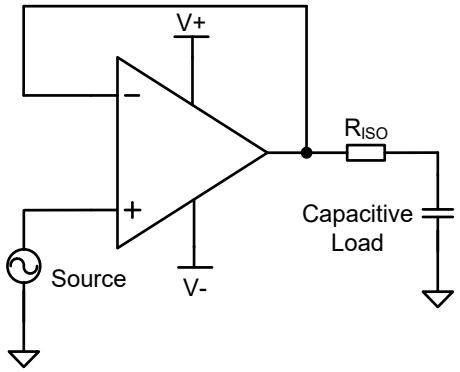

Figure 8-4 Insert isolation Resistor to drive large Capacitive Load

8.3.5 Electrical Overstress

Always, internal electrostatic discharge (ESD) protection is built into these circuits to protect them from accidental ESD events both before and during product assembly.

Having a good understanding of this basic ESD circuitry and its relevance to an electrical overstress event is helpful. Figure 8-5 shows an illustration of the ESD circuits contained in the NSOPA810x (indicated by the dotted area). The ESD protection circuitry involves several current-steering diodes connected from the input and output pins and routed back to the internal power-supply lines, where the diodes meet at an absorption device or the power-supply ESD cell, internal to the operational amplifier. This protection circuitry is intended to remain inactive during normal circuit operation.

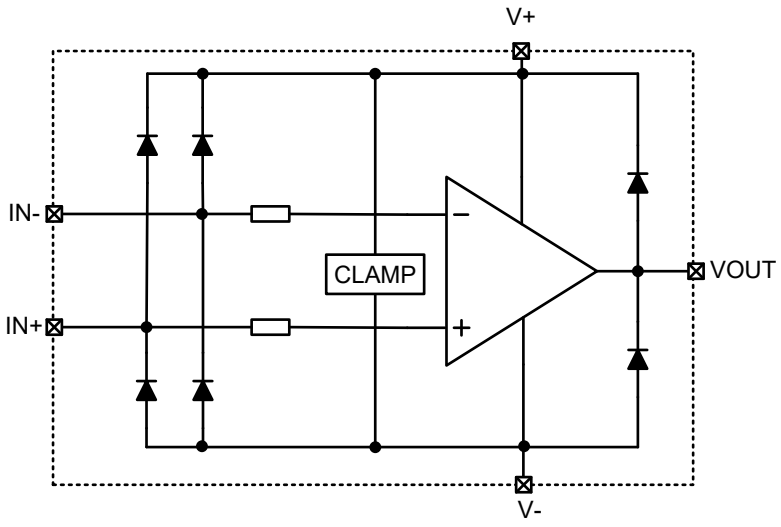

Figure 8-5 Internal ESD Equipment Model

Designers often ask questions about the capability of an operational amplifier to withstand electrical overstress (EOS). These questions tend to focus on the device inputs but may involve the supply voltage pins or even the output pin. Each of these different pin functions have electrical stress limits determined by the voltage breakdown characteristics of the particular semiconductor fabrication process and specific circuits connected to the pin.

Copyright © 2025, NOVOSENSE

Electrostatic Discharge (ESD) is defined the transfer of electrostatic charge between bodies or surfaces at different electrostatic potential. ESD is regarded as a high voltage(kV), short duration event(1-100ns). Besides, it is fast edges and lower power event.

But unlike ESD problems, EOS is another common device problem. Electrical Over Stress (EOS) is defined the exposure of an item to current or voltage beyond its maximum ratings.

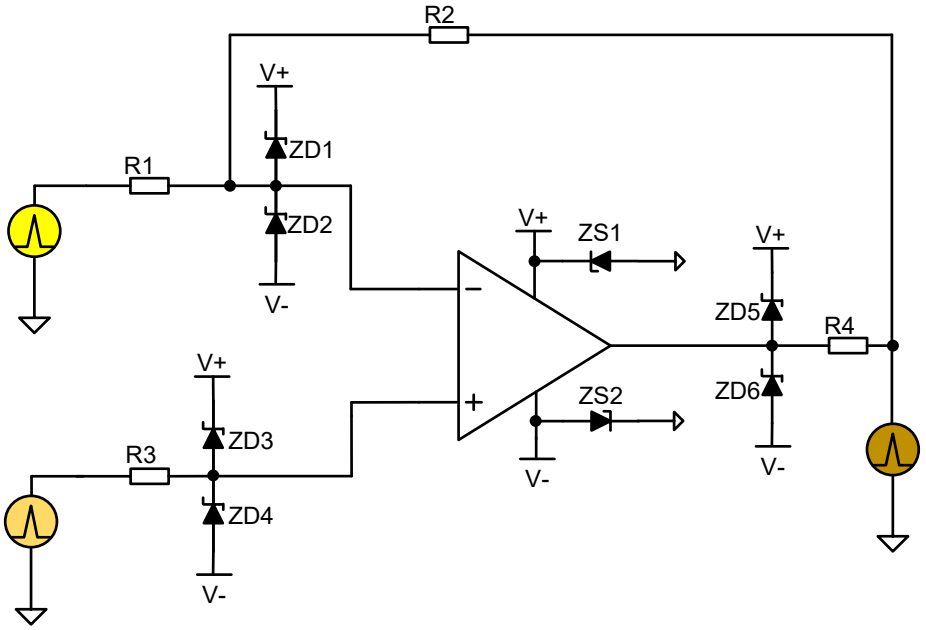

Figure 8-6 External component to enhance EOS performance

Figure 8-6 shows how to use external components to enhance the circuitry robustness.

1. ZDx are small signal Schottky diodes. Using power Schottky for power operational amplifier. Diodes limits EOS Voltage to [(V+) +0.3V] or [(V-)-0.3V].
2. ZS1 and ZS2 are Zener diodes or unipolar semiconductor Transient Voltage Suppressors (TVS). They prevent device supply over-voltage, provide reverse polarity protection, and provide a current path for Iq if one supply floats.
3. R1, R2 limit current through ZD1, ZD2.
4. R3 limits current through ZD3, ZD4.
5. R4 limits current through ZD5, ZD6.R4 is inside the feedback loop adding little error at output voltage.
6. **Check Absolute Maximum Ratings before using devices and never violate the Absolute Maximum Ratings.**

Copyright © 2025, NOVOSENSE

9. Application Information

9.1 Active Filter

NSOPA810x can be configured into different types of filters for processing complex signals. Here is a brief explanation of Sallen-key filter type.

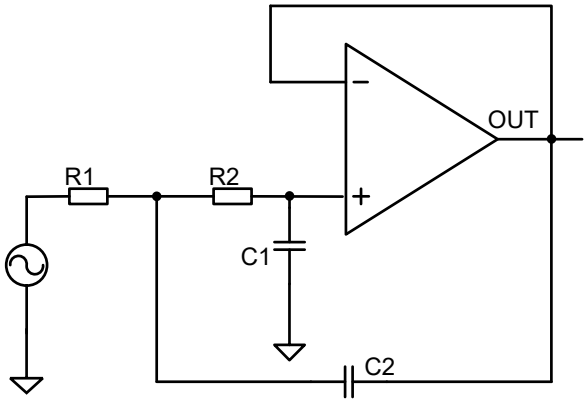

Figure 9-1 Second-Order Sallen-Key Filter

The transfer function of this circuit can be derived as:

$$f_c = \frac{1}{2\pi\sqrt{R_1 R_2 C_1 C_2}}$$

The 1kHz low pass filter is taken as a design example. By setting R1=9.1kΩ, R2=13 kΩ, C1=10nF and C2=20.5nF, we can get the amplitude-frequency and phase-frequency curves as follows.

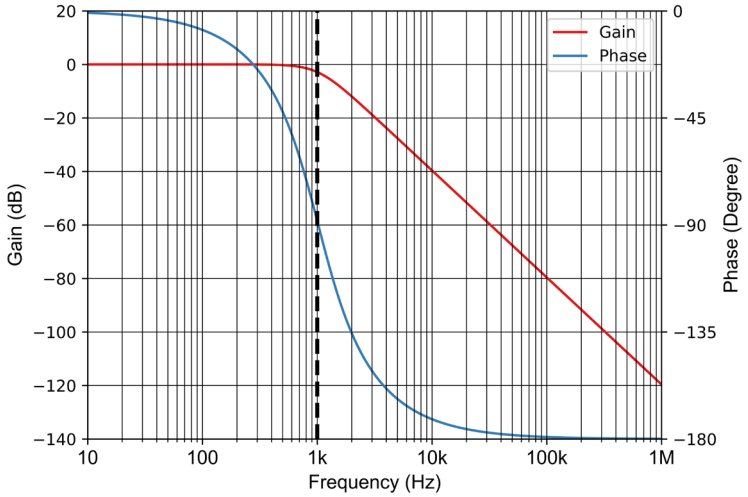

Figure 9-2 Amplitude-Frequency and Phase-Frequency Curves

Copyright © 2025, NOVOSENSE

9.2 Low-Side Current Sensing Application

NSOPA810x can be configured in Low-Side Current Sensing. Figure 9-3 shows the applications.

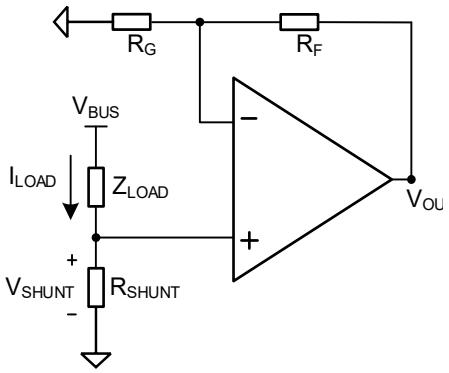

Figure 9-3 NSOPA810x in a Low-Side, Current-Sensing Application

The transfer function of this circuit can be derived as:

$$I_{LOAD} = \frac{V_{OUT} \times R_G}{(R_F + R_G) \times R_{SHUNT}}$$

The I_{LOAD} current produces a voltage drop across the R_{SHUNT}. The voltage drop produced by I_{LOAD} and R_{SHUNT} is amplified by the NSOPA810x to produce an output voltage V_{OUT}, from which the load current can be calculated.

However, it should be noted that select a resistor with the appropriate resistance value. The first is to avoid V_{SHUNT} and V_{OS} orders of magnitude similar, V_{SHUNT} should be much larger than V_{OS}. Because the generated V_{SHUNT} will be relatively small when the I_{LOAD} current is small. At this time, the influence of V_{OS} will dominate, resulting in a large measurement error. Second, the V_{SHUNT} generated when flowing through the maximum I_{LOAD} current does not exceed the common-mode voltage range of NSOPA810x. It is also necessary to configure the gain reasonably to avoid the phenomenon of the output voltage exceeding the power supply rail.

Copyright © 2025, NOVOSENSE

10.Layout Guidelines

10.1 Guidelines

Poor op amp PCB layout will deteriorate the chip parameters, or even worse, cause it to work abnormally. For better performance, some tips should be considered.

• Noise can propagate into the analog circuitry through the board's power connections and to the power pins of the op amp itself. Bypass capacitors are used to reduce coupled noise by providing a low impedance path to ground.

Connect a low ESR 0.1µF ceramic bypass capacitor between each supply pin and ground as close to the device as possible. A single bypass capacitor from V+ to ground is sufficient for single-supply applications.

• To reduce parasitic coupling, keep input traces as far away from power supply or output traces as possible. If these traces cannot be kept separate, route them at a 90-degree angle

It's much better to run overly sensitive traces than to run traces parallel to noisy traces.

• External components should be located as close to the device as possible, as shown in Figure 10-1. Keeping RF and RG close to the inverting input minimizes parasitic capacitance.

• Keep input traces as short as possible. Remember, the input traces are the most sensitive parts of the circuit.

• For best performance, cleaning is recommended after PCB board assembly.

10.2 Example

A single channel is shown as follow. The rest channels should be handled with identical way but not shown in the figure.

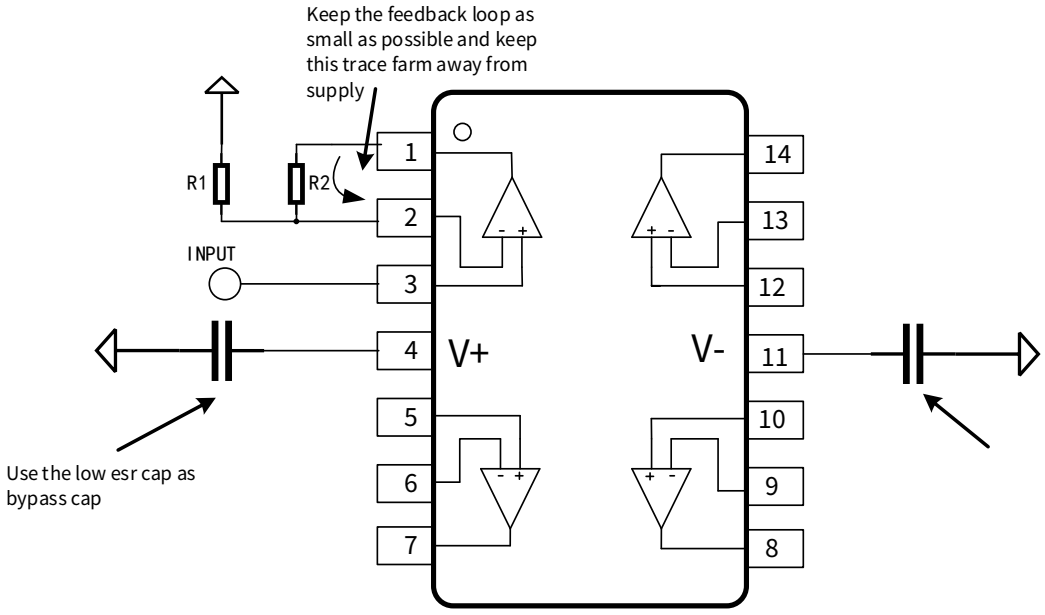

Figure 10-1 Layout example

Copyright © 2025, NOVOSENSE

11.Package Information

SOT23-5L

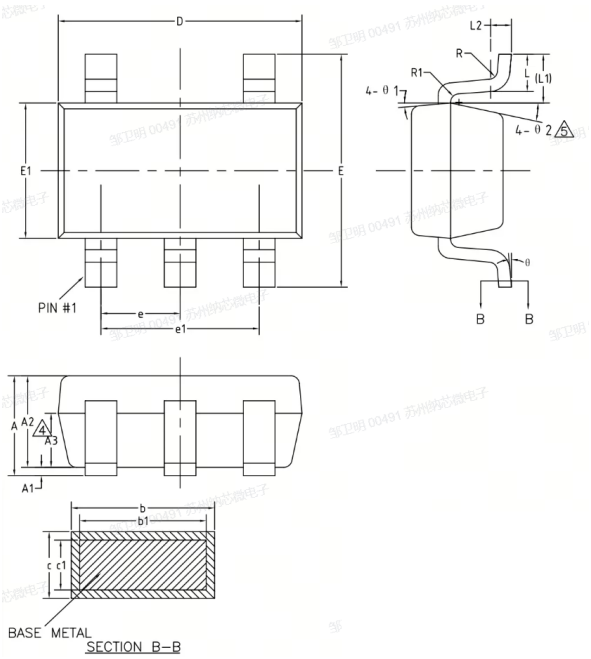

Symbol	Dimensions In Millimeters		Dimensions In Inches	
	Min	Max	Min	Max
A	— —	1.25	— —	0.049
A1	— —	0.15	— —	0.006
A2	1.00	1.20	0.039	0.047
A3	0.60	0.70	0.024	0.028
b	0.36	0.50	0.014	0.020
b1	0.36	0.45	0.014	0.018
c	0.14	0.20	0.006	0.008
c1	0.14	0.16	0.006	0.006
D	2.826	3.026	0.111	0.119
E	2.60	3.00	0.102	0.118
E1	1.526	1.726	0.060	0.068
e	0.90	1.00	0.035	0.039
e1	1.80	2.00	0.071	0.079
L	0.35	0.60	0.014	0.024
L1	0.59REF		0.023REF	
L2	0.25BSC		0.010BSC	
R	0.10	— —	0.004	— —
R1	0.10	0.25	0.004	0.010
θ	0°	8°	0°	8°
θ1	3°	7°	3°	7°
θ2	6°	14°	6°	14°

Copyright © 2025, NOVOSENSE

SC70-5

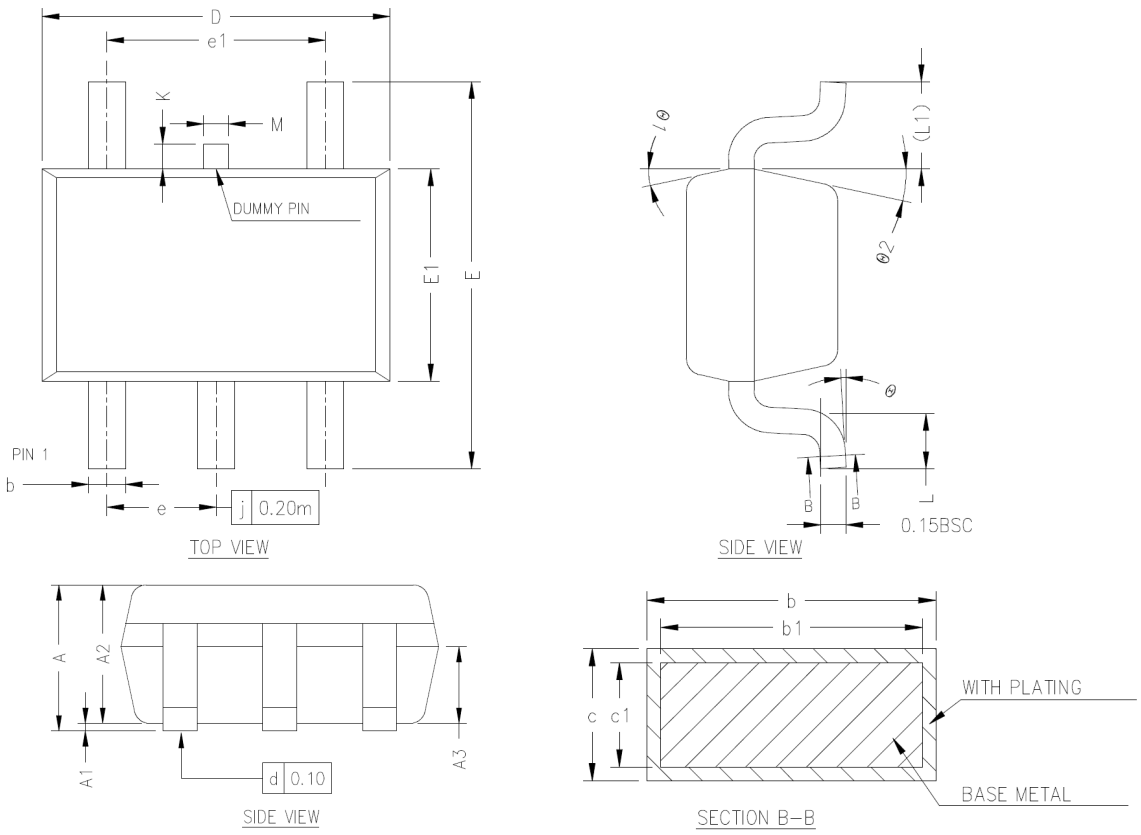

Symbol	Dimensions In Millimeters		Dimensions In Inches	
	Min	Max	Min	Max
A	0.80	1.10	0.031	0.043
A1	0	0.10	0	0.004
A2	0.80	1.00	0.031	0.039
A3	0.40	0.60	0.016	0.024
b	0.17	0.30	0.007	0.012
b1	0.17	0.25	0.007	0.010
c	0.12	0.20	0.005	0.008
c1	0.12	0.16	0.005	0.006
D	2.02	2.12	0.080	0.083
E	2.20	2.40	0.087	0.094
E1	1.21	1.31	0.048	0.052
e	0.60	0.70	0.024	0.028
e1	1.20	1.40	0.047	0.055
L	0.26	0.46	0.010	0.018
L1	0.52REF		0.020REF	
M	0.10	0.20	0.004	0.008
K	0	0.20	0	0.008
θ	0°	8°	0°	8°
θ1	10°	14°	10°	14°
θ2	10°	14°	10°	14°

Copyright © 2025, NOVOSENSE

SOP8

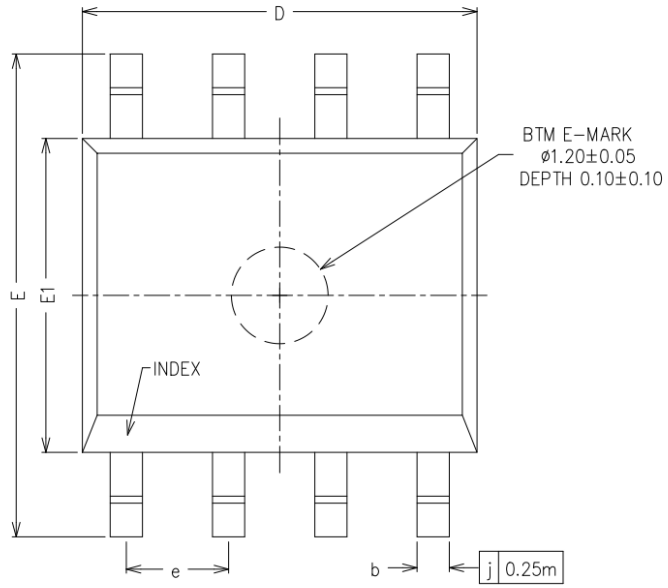

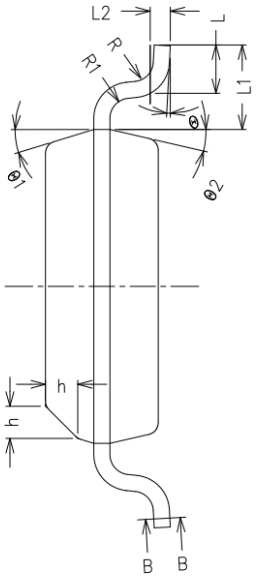

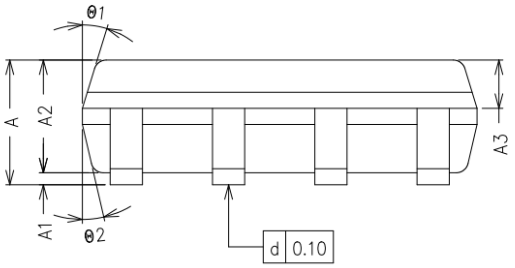

Symbol	Dimensions In Millimeters		Dimensions In Inches	
	Min	Max	Min	Max
A	— —	1.75	— —	0.069
A1	0.05	0.25	0.002	0.01
A2	1.30	1.50	0.051	0.059
A3	0.50	0.70	0.020	0.028
b	0.38	0.47	0.015	0.019
b1	0.37	0.40	0.015	0.016
D	4.80	5.00	0.189	0.197
E	5.80	6.20	0.228	0.244
E1	3.80	4.00	0.15	0.157
e	1.17	1.37	0.046	0.054
L	0.45	0.80	0.018	0.031
L1	1.04REF		0.041REF	
L2	0.25BSC		0.010BSC	
R	0.07	— —	0.003	— —
R1	0.07	— —	0.003	— —
h	0.30	0.50	0.012	0.020
θ	0°	8°	0°	8°
θ1	15°	19°	15°	19°
θ2	11°	15°	11°	15°

Copyright © 2025, NOVOSENSE

MSOP8

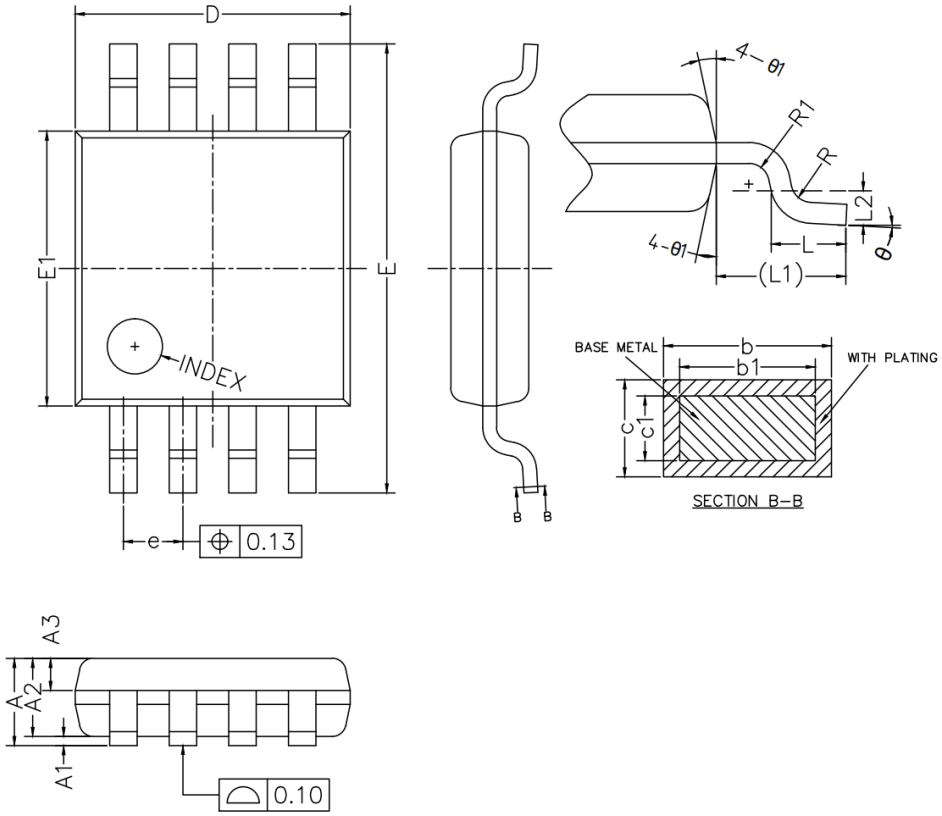

Symbol	Dimensions In Millimeters		Dimensions In Inches	
	Min	Max	Min	Max
A	— —	1.10	— —	0.043
A1	0.05	0.15	0.002	0.006
A2	0.75	0.95	0.030	0.037
A3	0.30	0.40	0.012	0.016
b	0.25	0.38	0.010	0.015
b1	0.24	0.33	0.009	0.013
c	0.15	0.20	0.006	0.008
c1	0.14	0.16	0.006	0.0062
D	2.90	3.10	0.114	0.122
E	4.75	5.05	0.187	0.199
E1	2.90	3.10	0.114	0.122
e	0.55	0.75	0.022	0.030
L	0.40	0.70	0.016	0.028
L1	0.95REF		0.037(BSC)	
L2	0.25BSC		0.010	
R	0.07	— —	0°	8°
R1	0.07	— —	0.003	— —
θ	0°	8°	0°	8°
θ1	9°	15°	9°	15°

Copyright © 2025, NOVOSENSE

SOP14

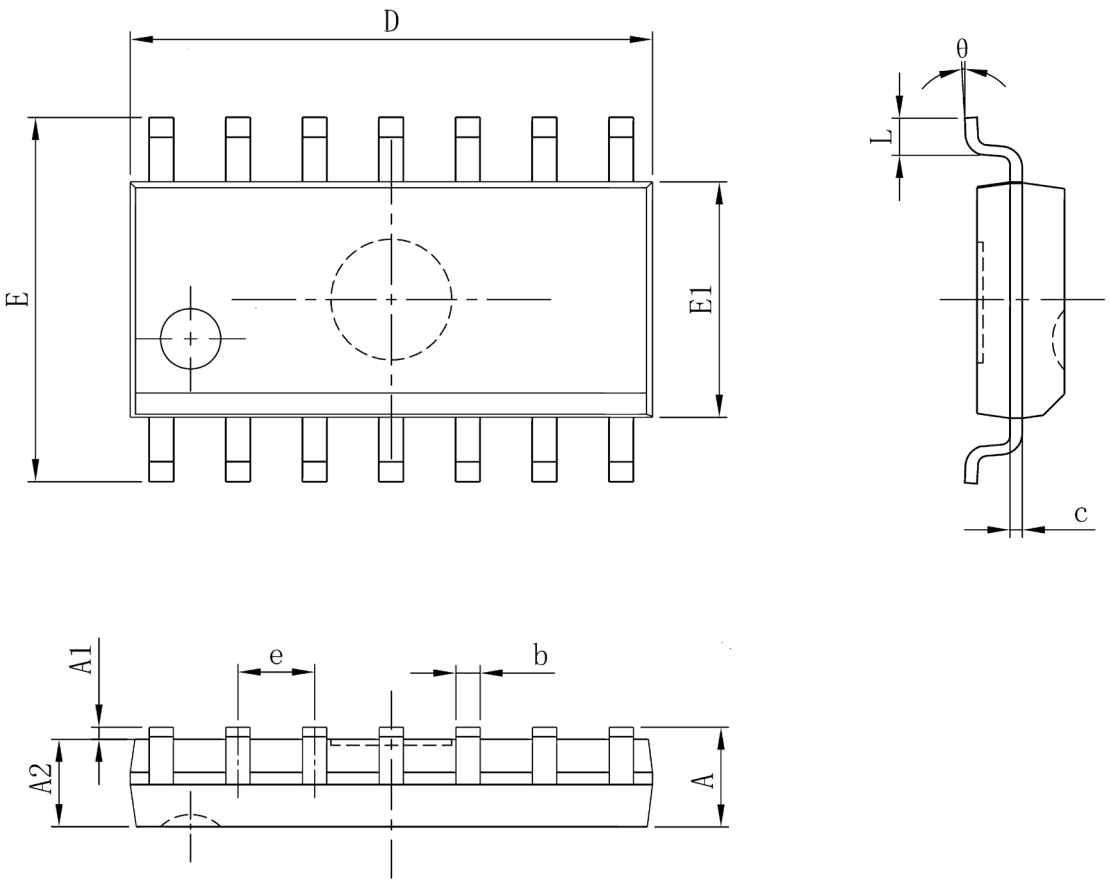

Symbol	Dimensions In Millimeters		Dimensions In Inches	
	Min	Max	Min	Max
A	— —	1.75	— —	0.069
A1	0.1	0.25	0.004	0.01
A2	1.25	— —	0.049	— —
b	0.31	0.51	0.012	0.02
c	0.1	0.25	0.004	0.01
D	8.45	8.85	0.333	0.348
E	5.8	6.2	0.228	0.244
E1	3.8	4	0.15	0.157
e	1.270(BSC)		0.050(BSC)	
L	0.4	0.016	0.016	0.05
θ	0°	0°	0°	8°

Copyright © 2025, NOVOSENSE

TSSOP14

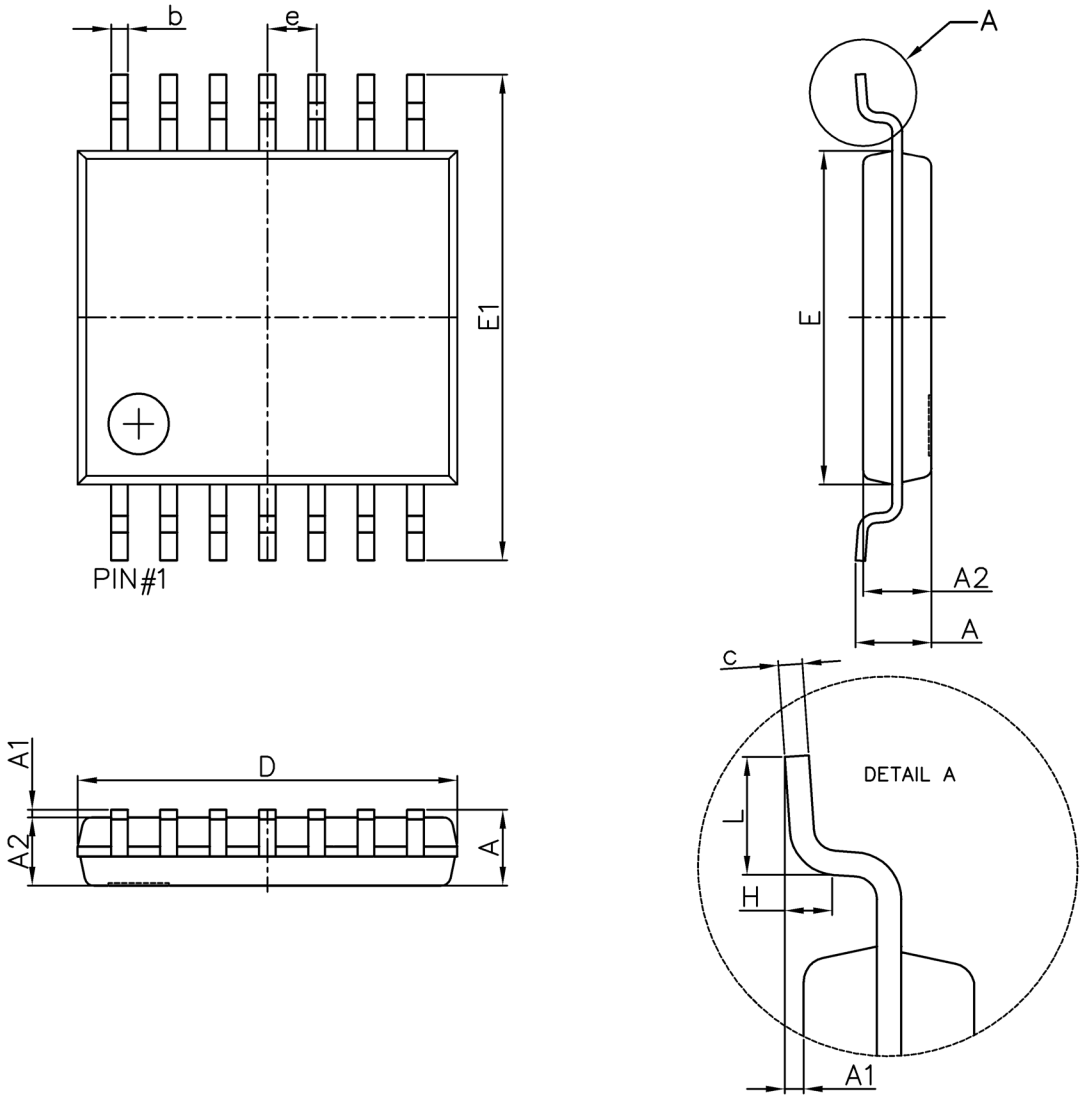

Symbol	Dimensions In Millimeters		Dimensions In Inches	
	Min.	Max.	Min.	Max.
D	4.9	5.1	0.193	0.201
E	4.3	4.5	0.169	0.177
b	0.19	0.3	0.007	0.012
c	0.09	0.2	0.004	0.008
E1	6.25	6.55	0.246	0.258
A	—	1.2	—	0.047
A2	0.8	1	0.031	0.039
A1	0.05	0.15	0.002	0.006
e	0.65 (BSC)		0.026 (BSC)	
L	0.5	0.7	0.02	0.028
H	0.25(TYP)		0.01(TYP)	
θ	1°	7°	1°	7°

Copyright © 2025, NOVOSENSE

Example Of Solder Pads Dimensions

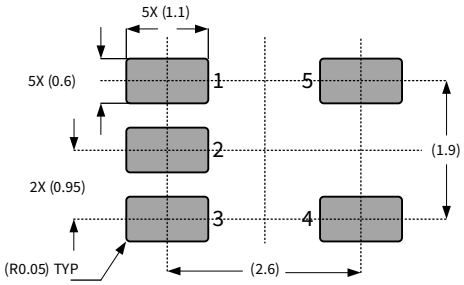

SOT23-5L

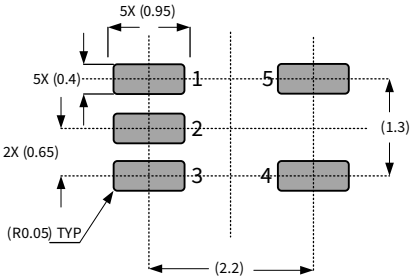

SC70-5

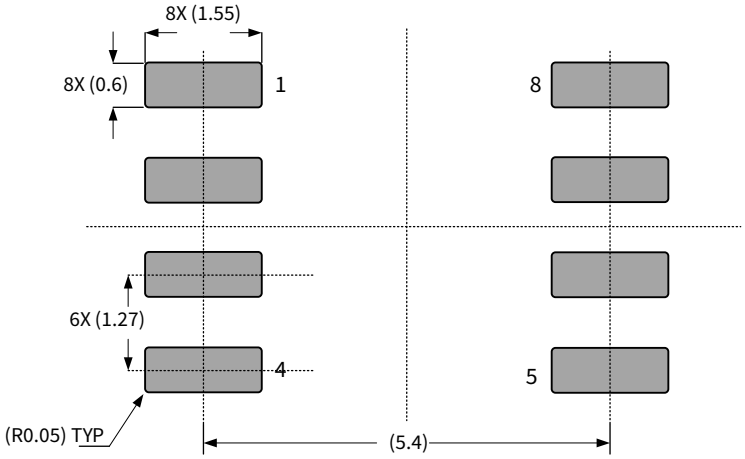

SOP8

Copyright © 2025, NOVOSENSE

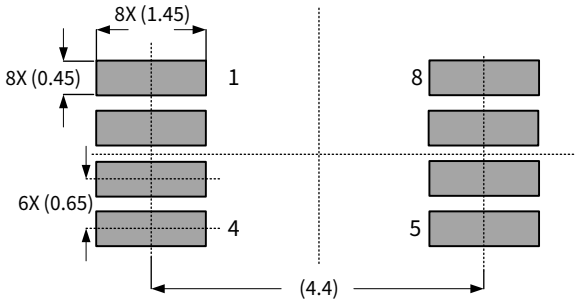

MSOP8

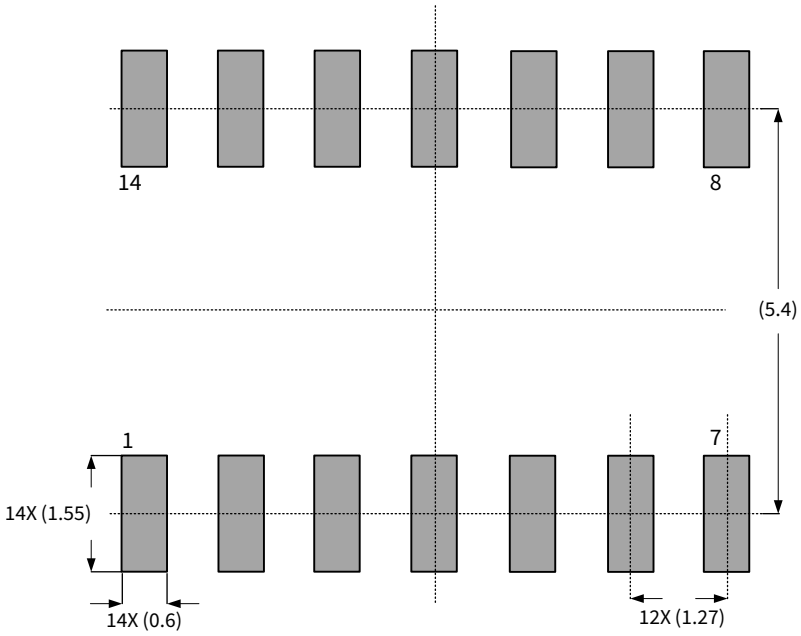

SOP14

Copyright © 2025, NOVOSENSE

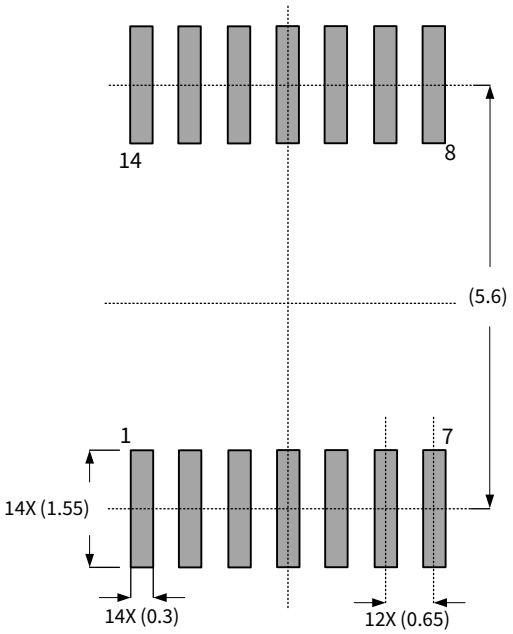

TSSOP14

Note:

1. Unit: mm.

Copyright © 2025, NOVOSENSE

12.Order Information

Part Number	*Package*	*MSL Level*	*Op Temp (°C)*	*SPQ*
NSOPA8101-DSTAR	SOT23-5L	1	-40~+125	3000
NSOPA8101-DSCAR	SC70-5	1	-40~+125	3000
NSOPA8102-DSPR	SOP8	1	-40~+125	2500
NSOPA8102-DMSR	MSOP8	1	-40~+125	2500
NSOPA8104-DSPKR	SOP14	1	-40~+125	2500
NSOPA8104-DTSKR	TSSOP14	1	-40~+125	4000
Note: All packages are ROHS compliant with peak reflow temperature of 260°C according to the JEDEC industry standard classifications and peak solder temperature.				

Copyright © 2025, NOVOSENSE

13.Tape and Reel Information

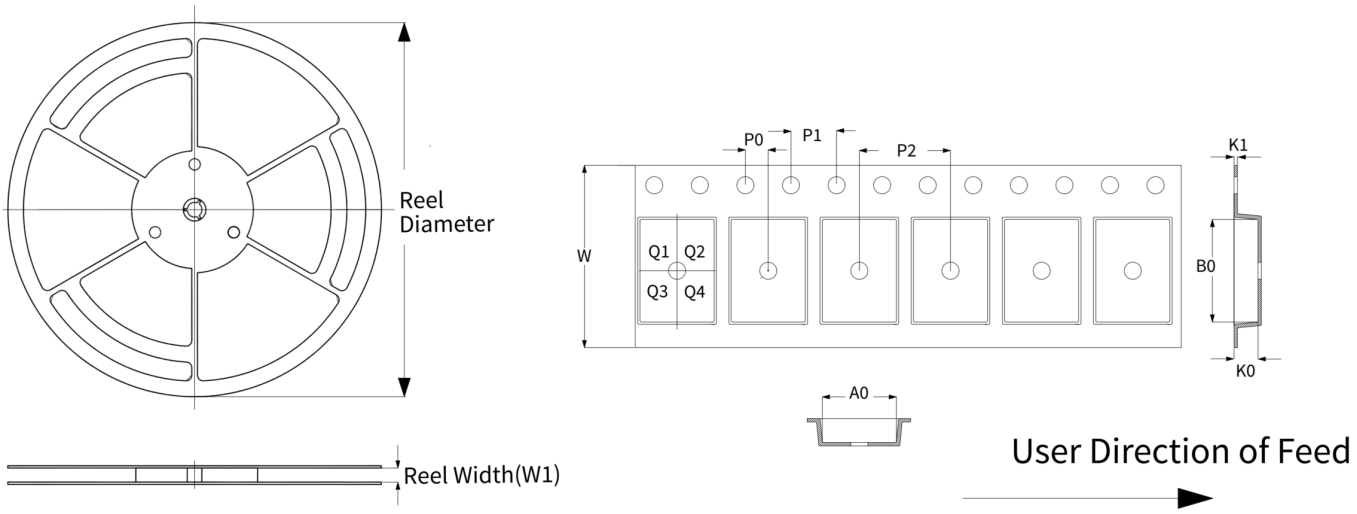

Device	*Reel Diameter*	*Reel Width(W1)*	*W*	*A0*	*B0*	*P0*	*P1*	*P2*	*K0*	*K1*	*PIN1 Quadrant*
NSOPA8101-DSTAR	178	8.4	8.0	3.3	3.2	2.0	4.0	4.0	1.4	0.23	Q3
NSOPA8101-DSCAR	178	8.4	8.0	2.4	2.5	2.0	4.0	4.0	1.2	0.25	Q3
NSOPA8102-DSPR	330	12.4	12.0	6.6	5.5	2.0	4.0	8.0	2.1	0.3	Q1
NSOPA8102-DMSR	330	12.4	12.0	5.25	3.35	2.0	4.0	8.0	1.25	0.3	Q1
NSOPA8104-DSPKR	330	16.4	16.0	6.60	9.3	2.0	4.0	8.0	2.1	0.3	Q1
NSOPA8104-DTSKR	330	16.4	12.0	6.85	5.45	2.0	4.0	8.0	1.6	0.35	Q1

Note:

1. All dimensions are nominal.
2. The picture is only for reference. Please make the object as the standard.
3. Unit: mm.

Copyright © 2025, NOVOSENSE

14.Revision History

Revision	*Description*	*Date*
V1.0	Initial version	2024/12

Copyright © 2025, NOVOSENSE

IMPORTANT NOTICE

The information given in this document (the "Document") shall in no event be regarded as any warranty or authorization of, express or implied, including but not limited to accuracy, completeness, merchantability, fitness for a particular purpose or infringement of any third party's intellectual property rights.

Users of this Document shall be solely responsible for the use of NOVOSENSE's products and applications, and for the safety thereof. Users shall comply with all laws, regulations and requirements related to NOVOSENSE's products and applications, although information or support related to any application may still be provided by NOVOSENSE.

This Document is provided on an "AS IS" basis, and is intended only for skilled developers designing with NOVOSENSE's products. NOVOSENSE reserves the rights to make corrections, modifications, enhancements, improvements or other changes to the products and services provided without notice. NOVOSENSE authorizes users to use this Document exclusively for the development of relevant applications or systems designed to integrate NOVOSENSE's products. No license to any intellectual property rights of NOVOSENSE is granted by implication or otherwise. Using this Document for any other purpose, or any unauthorized reproduction or display of this Document is strictly prohibited. In no event shall NOVOSENSE be liable for any claims, damages, costs, losses or liabilities arising out of or in connection with this Document or the use of this Document.

For further information on applications, products and technologies, please contact NOVOSENSE (www.novosns.com).

Suzhou NOVOSENSE Microelectronics Co., Ltd

Copyright © 2025, NOVOSENSE