WWW.XYECONN.COM

REV.	Q'TY	ECN. NO.	APR.	DATE

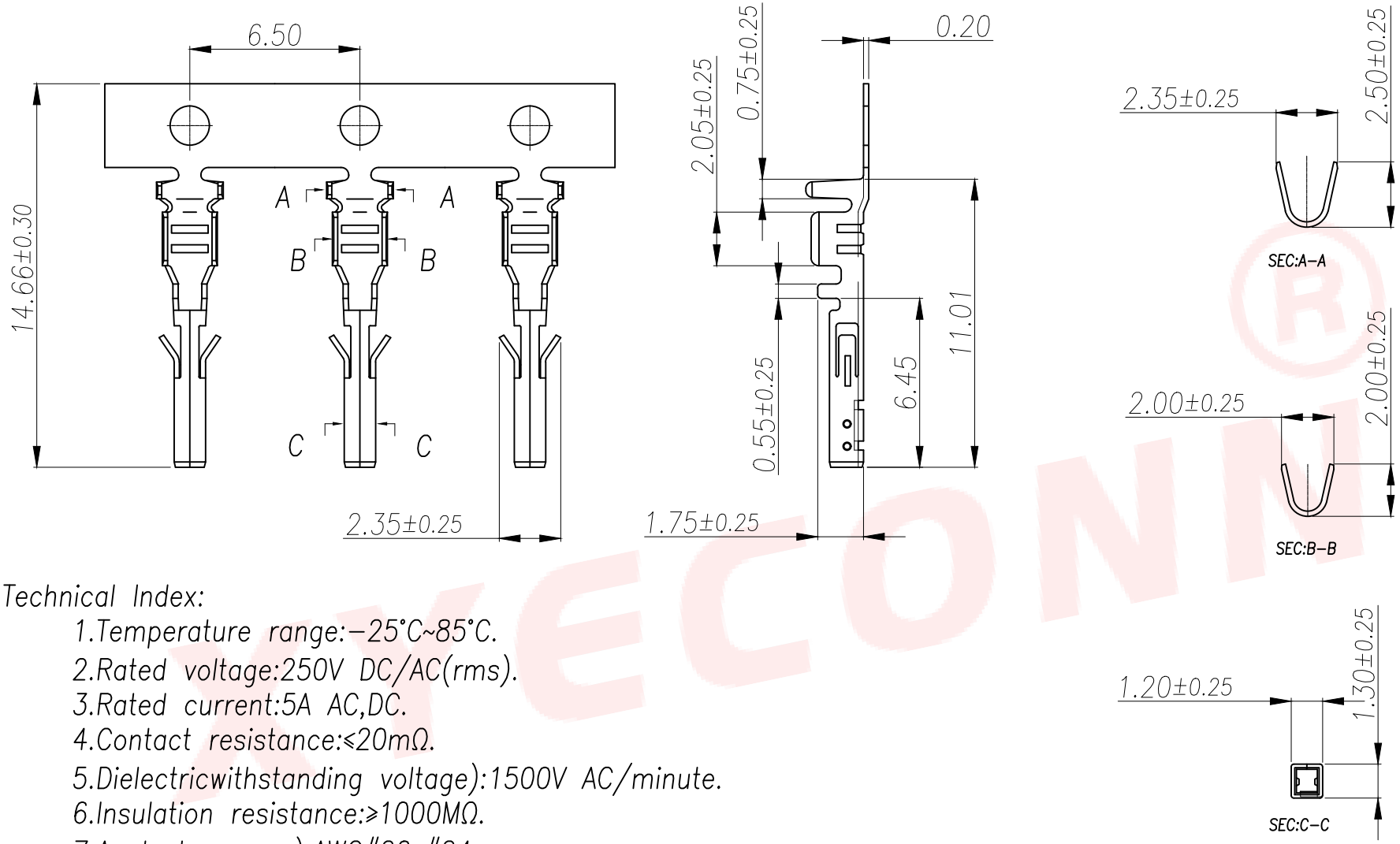

Technical Index:

1. Temperature range:-25°C~85°C.
2. Rated voltage:250V DC/AC(rms).
3. Rated current:5A AC,DC.
4. Contact resistance:≤20mΩ.
5. Dielectricwithstanding voltage):1500V AC/minute.
6. Insulation resistance:≥1000MΩ.
7. Apply to gauge):AWG#20~#24.

序号	品名	材质
1	端子	Phosphor Bronze Bright tin plated

DIMENSION IN mm		厦门市辛译精密电子有限公司 Xiamen XinYi Xyeconn Electronics Co.,Ltd			
TOLERANCE UNLESS OTHERWISE SPECIFIED					
X.X±0.30	X.°±5°	APR. Alex	TITLE: MX3.0MM TERMINAL		
X.XX±0.25	X.X°±1°	CHK. Jack	DWG NO. XY-MX3.0-31-G		
			PROJ.	CUSTOMER DRAWING	
X.XXX±0.15		DRA. Can	SIZE A4	SCALE 1:1	SHEET 1/1 REV. A

F-RD-18A