WWW.XYECONN.COM

| REV. | Q'TY | ECN. NO. | APR. | DATE |
|---|---|---|---|---|
| | | | | |

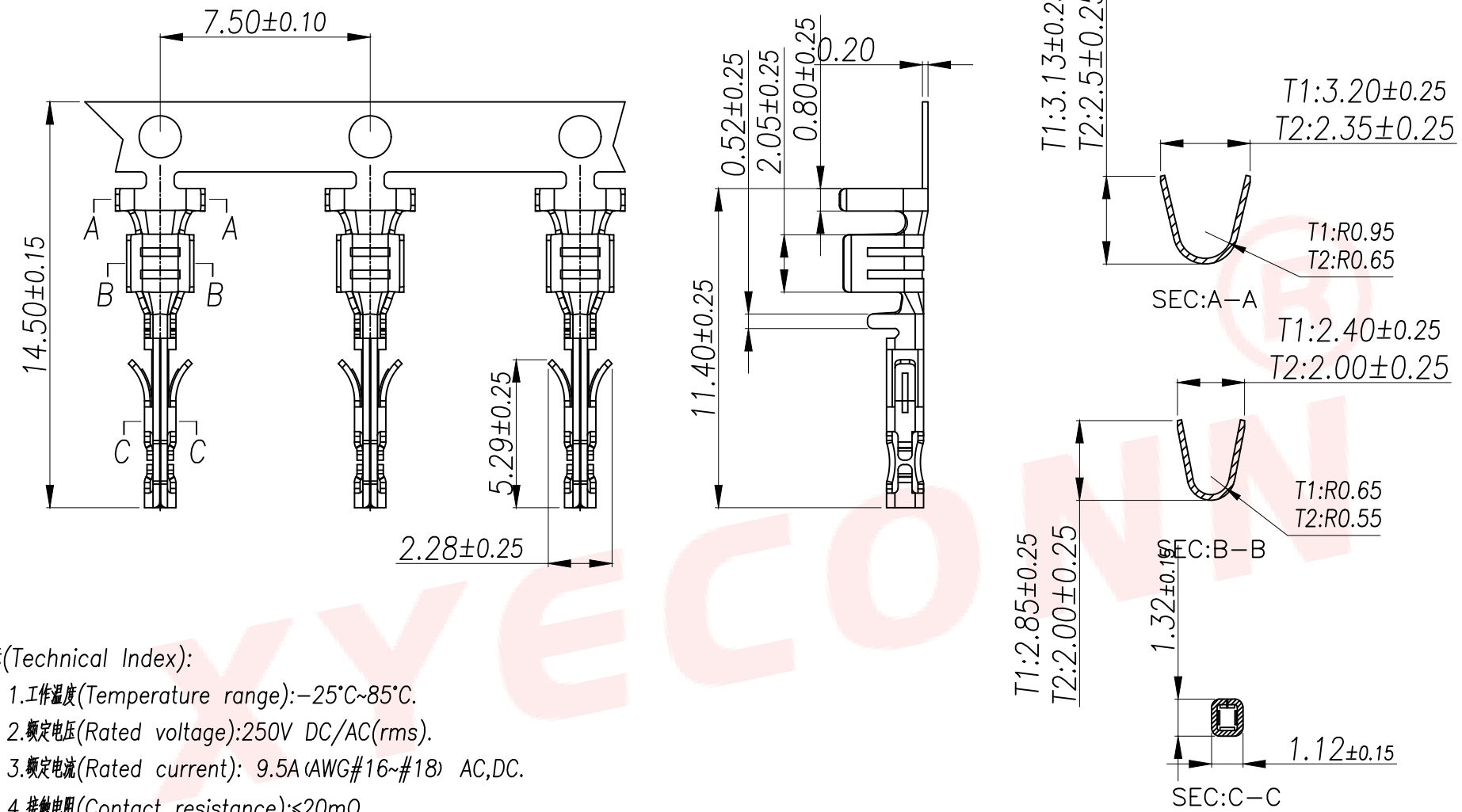


技术指标(Technical Index):

1.工作温度(Temperature range):-25°C~85°C.

2.额定电压(Rated voltage):250V DC/AC(rms).

3.额定电流(Rated current): 9.5A (AWG#16~#18) AC,DC.

4.接触电阻(Contact resistance):≤20mΩ.

5.耐压值(Dielectricwithstanding voltage):1500V AC/minute.

6.绝缘电阻(Insulation resistance):≥1000MΩ.

7.适用线规(Apply to gauge):T1:AWG#16~#18.
T2:AWG#20~#24.

| 序号 | 品名 | 材质 |
|---|---|---|
| 1 | 端子 | Phosphor Bronze<br>Bright tin plated |

| DIMENSION IN mm | | 厦门市辛译精密电子有限公司<br>Xiamen XinYi Xyeconn Electronics Co.,Ltd | | |
|---|---|---|---|---|
| TOLERANCE UNLESS OTHERWISE SPECIFIED | | | | |
| X.:±0.50 | ±1° | APR. Alex | TITLE: MX3.0端子(大电流) | |
| X.X:±0.20 | | CHK. Jack | DWG NO. XY-MX3.0-31-DG | |
| X.XX:±0.10 | | DRA. Can | PROJ. | CUSTOMER DRAWING |
| | | | SIZE A4 / SCALE 1:1 | SHEET 1/1 / REV. A |

F-RD-18A