User Guide

MP2790 Evaluation Kit (EVKT-MP2790-0000/0002)

EVKT-MP2790-0002 EOL, Refer to EVKT-MP2790-0000

Table of Contents

Overview 3
Kit Contents 3
Features and Benefits 4
Kit Specifications 5
Section 1. Hardware Specifications 6
1.1 Personal Computer Requirements 6
1.2 EV2790-000x-FP-00A Specifications 6
1.3 EVKT-USBI2C-02 and EVKT-USBSPI-00 Specifications 7
Section 2. Software Requirements 8
2.1 Software Installation Procedure 8
Section 3. Evaluation Kit Test Set-Up 9
3.1 Hardware Set-Up 9
3.2 Powering Up the EVB 11
3.3 Software Set-Up 11
3.4 Device Configuration Instructions 12
3.5 Troubleshooting Tips 15
Section 4. Ordering Information 17

MPS Proprietary Information. Patent Protected. Unauthorized Photocopy and Duplication Prohibited.
© 2025 MPS. All Rights Reserved.

Overview

The EVKT-MP2790-0000 and EVKT-MP2790-0002 ***(End of Life, Refer to EVKT-MP2790-0000)*** are evaluation kits for the MP2790. This board is designed to demonstrate the capabilities of the MP2790, which is used as a robust battery management device. The MP2790 provides a complete analog front-end (AFE) monitoring and protection solution that is designed for 7-cell to 10-cell series battery systems.

Kit Contents

EVKT-MP2790-0000 kit contents (items below can be ordered separately):

#	Part Number	Item	Quantity
1	EV2790-0000-FP-00A	MP2790-0000 evaluation board	1
2	EVKT-USBI2C-02	Includes one USB to I^2C communication interface, one USB cable, and one ribbon cable	1
3	Online resources	Includes GUI and supplemental documents	-

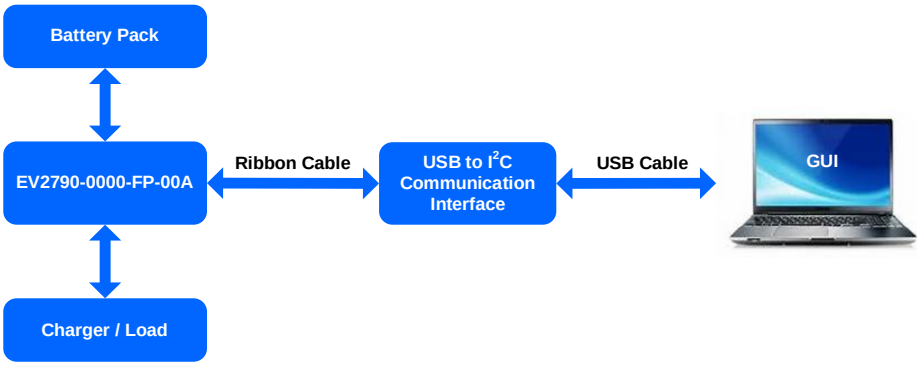

Figure 1: EVKT-MP2790-0000 Evaluation Kit Set-Up

EVKT-MP2790-0002 ***(End of Life, Refer to EVKT-MP2790-0000)*** kit contents (items below can be ordered separately):

#	Part Number	Item	Quantity
1	EV2790-0002-FP-00A	MP2790-0002 evaluation board	1
2	EVKT-USBSPI-00	Includes one USB to SPI communication interface, one USB cable, and one ribbon cable	1
3	Online resources	Includes GUI and supplemental documents	-

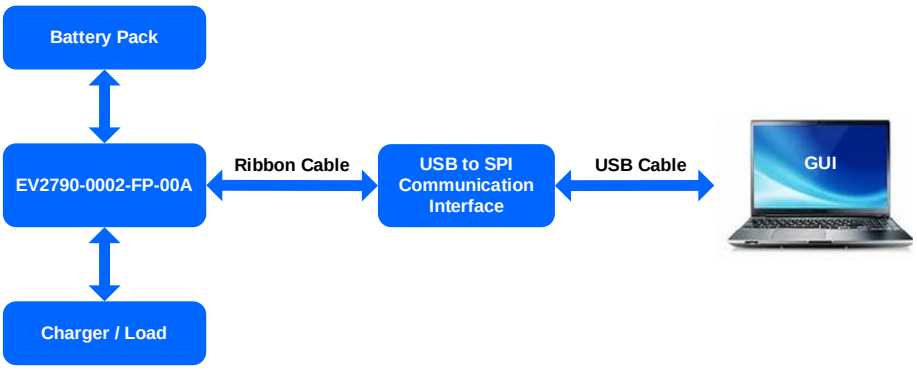

Figure 2: EVKT-MP2790-0002 Evaluation Kit Set-Up

MPS Proprietary Information. Patent Protected. Unauthorized Photocopy and Duplication Prohibited.
© 2025 MPS. All Rights Reserved.

Features and Benefits

- Supports 7-Cell to 10-Cell Series Battery Packs
- I^2C or SPI Interface with 8-Bit Cyclic Redundancy Check (CRC)
- Analog Front-End (AFE) Monitor:
  - Strictly Synchronized Current and Voltage Measurement for Impedance Sensing
  - 15-Bit Analog-to-Digital Converter (ADC) with <5mV Total Cell Measurement Error at 25°C
  - 16-Bit ADC with <±0.5% Pack Current and Coulomb Counting Measure Error at 25°C via SRP and SRN
- Configurable Protections:
  - Charge and Discharge Over-Current Protection (OCP)
  - Charge and Discharge Short-Circuit Protection (SCP)
  - Cell Under-Voltage Protection (UVP) and Over-Voltage Protection (OVP)
  - Pack UVP and OVP
  - Cell Low-Temperature and High-Temperature Protection
  - Die High-Temperature Protection
- Integrated High-Side MOSFET (HS-FET) Driver:
  - Supports MOSFET Soft-Start Discharge Control to Eliminate Pre-Charge Circuit
  - Drives Up to 70A DC with Parallel N-Channel MOSFETs
  - GPIO-Controlled or Register-Controlled MOSFET Enable
- Passive Cell Balancing Up to 58mA per Cell:
  - Can Drive External Balancing Transistors
  - Automatic or Manual Control
- Additional Features:
  - Integrated 3.3V and 5V Low-Dropout (LDO) Regulators
  - Reduced Current Standby Mode
  - Load and Charge Plug-In Detection
  - High-Voltage (HV) and Low-Voltage (LV) GPIOs
  - Dedicated Thermistor Inputs
  - Open-Wire Detection
  - Persistent Dead Battery Flag
  - Lockable Multiple-Time Programmable (MTP) Memory for Key Protection Thresholds
- Random Cell Connection Tolerant
- Available in a TQFP-48 Package (7mmx7mm)

⚠ *All changes made in I^2C/SPI mode are not retained once the evaluation board shuts down.*

⚠ *Information written in MTP mode cannot be changed.*

MPS Proprietary Information. Patent Protected. Unauthorized Photocopy and Duplication Prohibited.
© 2025 MPS. All Rights Reserved.

Adjustable Features

I²C/SPI	MTP
• Cell and communication configuration • MOSFET configuration • Plug-in configuration • Pin configuration • Analog-to-digital converter (ADC) scan configuration • Watchdog configuration • Open-wire configuration • Coulomb counting configuration • Over-current (OC) configuration • Short circuit configuration • Short circuit removal configuration • Negative temperature coefficient (NTC) configuration • Die temperature configuration • Cell balancing configuration • Cell over-voltage (OV) configuration • Cell under-voltage (UV) configuration • Cell mismatch configuration • Cell dead configuration • VTOP OV configuration • VTOP UV configuration • REGIN, 3V3, VDD, and ADC self-test check configuration • One-time programmable (OTP) cyclic redundancy check (CRC) configuration • Interrupt configuration	• Cell and communication configuration • MOSFET configuration • Plug-in configuration • Pin configuration • ADC scan configuration • Watchdog configuration • Open-wire configuration • Coulomb counting configuration • OC configuration • Short circuit configuration • Short circuit removal configuration • NTC configuration • Die temperature configuration • Cell balancing configuration • Cell OV configuration • Cell UV configuration • Cell mismatch configuration • Cell dead configuration • VTOP OV configuration • VTOP UV configuration • REGIN, 3V3, VDD, and ADC self-test check configuration • OTP CRC check configuration

Kit Specifications

Features	Specifications
Battery Pack Voltage	18V to 55V
Cell Voltage	0V to 5V
Operating Systems Supported	Windows 7 or later
System Requirements	Minimum 25.6MB free
GUI Software	Programming tool MP2790 V1.0
EVB Size (LxW)	14cmx9.6cm

MPS Proprietary Information. Patent Protected. Unauthorized Photocopy and Duplication Prohibited.
© 2025 MPS. All Rights Reserved.

Section 1. Hardware Specifications

1.1 Personal Computer Requirements

The following minimum conditions must be met to use the EVKT-MP2790-0000/0002 ***(EVKT-MP2790-0002 End of Life, Refer to EVKT-MP2790-0000)***:

- Operating System of Windows 7 or later
- Net Framework 4.0
- PC with a minimum of one available USB port
- At least 25.6MB of free space

1.2 EV2790-000x-FP-00A Specifications

The EV2790-0000-FP-00A and EV2790-0002-FP-00A are evaluation boards for the MP2790. For more information, refer to the EV2790-0000/0002-FP-00A datasheet.

Figure 3: EV2790-0000-FP-00A Evaluation Board

Feature	Specifications
Battery Pack Voltage	18V to 55V
Cell Voltage	0V to 5V
EVB Size (LxW)	14cmx9.6cm

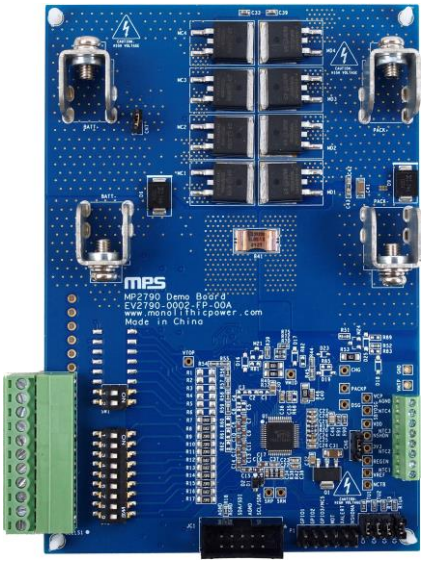

Figure 4: EV2790-0002-FP-00A Evaluation Board

Feature	Specifications
Battery Pack Voltage	18V to 55V
Cell Voltage	0V to 5V
EVB Size (LxW)	14cmx9.6cm

MPS Proprietary Information. Patent Protected. Unauthorized Photocopy and Duplication Prohibited.
© 2025 MPS. All Rights Reserved.

1.3 EVKT-USBI2C-02 and EVKT-USBSPI-00 Specifications

The EVKT-USBI2C-02 refers to the USB-to-I²C communication interface, which connects the EVB, the PC, and its supporting accessories (see Figure 5). It provides I²C capabilities. Together with MPS Virtual Bench Pro and I²C GUI tools, it provides a quick and easy way to evaluate the performance of MPS digital products. For more details, refer to the EVKT-USBI2C-02 datasheet.

Figure 5: EVKT-USBI2C-02 Communication Interface

The EVKT-USBSPI-00 refers to the USB-to-SPI communication interface, which connects the EVB, the PC, and its supporting accessories (see Figure 6). It provides SPI capabilities. Together with MPS Virtual Bench Pro and SPI GUI tools, it provides a quick and easy way to evaluate the performance of MPS digital products. For more details, refer to the EVKT-USBSPI-00 datasheet.

Figure 6: EVKT-USBSPI-00 Communication Interface

MPS Proprietary Information. Patent Protected. Unauthorized Photocopy and Duplication Prohibited.
© 2025 MPS. All Rights Reserved.

Section 2. Software Requirements

2.1 Software Installation Procedure

Configuration occurs through the MPS GUI. Follow the instructions below to install the software:

Note: This software can be downloaded from the MPS website.

1. Download and extract the “Programming tool MP2790 V1.0” file.
2. Double click the “.exe” file to open the set-up guide (see Figure 7). If a protection window comes up, click “More info,” then click “Run anyway.”
3. Follow the prompts in the set-up guide.
4. Wait for the status screen to verify that installation is complete (see Figure 8).

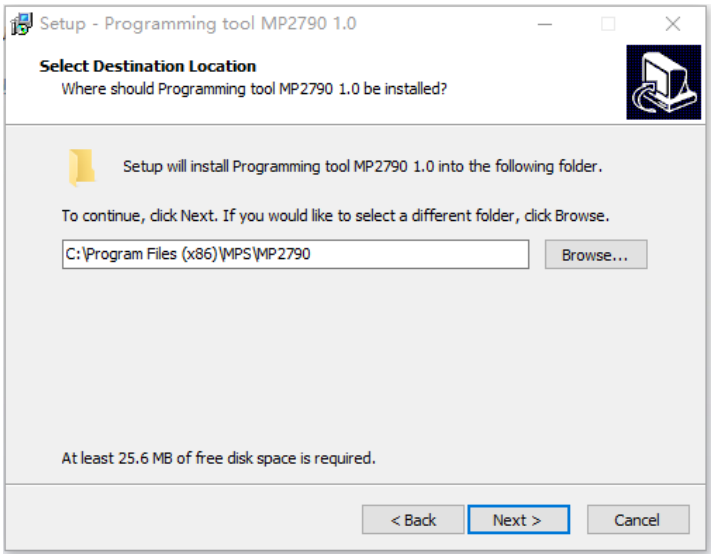

Figure 7: MPS GUI Set-Up Guide

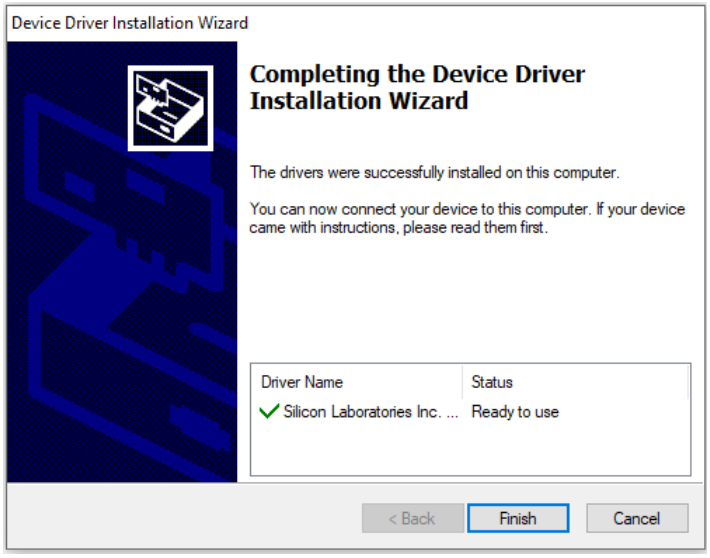

Figure 8: Driver Set-Up Success

MPS Proprietary Information. Patent Protected. Unauthorized Photocopy and Duplication Prohibited.
© 2025 MPS. All Rights Reserved.

Section 3. Evaluation Kit Test Set-Up

3.1 Hardware Set-Up

The hardware must be properly configured prior to use. Follow the instructions below to set up the EVB:

1. Remove the CN7 jumper.
2. Turn off all the channels on SW1 and SW2.
3. Short all unused cell channels (channel x, where x = 8 to 10) to the practical maximum cell channel using 0Ω resistors, depending on the number of cells in series in the battery pack. If there are 10 cells in series, then skip this step. For example, for a battery pack with 8 cells in series, add a 0Ω resistor at R60 and R61.
4. Connect the cell terminals to the voltage sensing connectors. For a battery pack with <10 cells in series, float the higher channel connectors.
5. Connect the battery terminals to:
   a. Positive (+): BATT+
   b. Negative (-): BATT-
6. Remove the CN2, CN3, CN4, and CN5 jumpers.
7. Connect and locate the temperature sensors. The temperature connectors can support up to four negative temperature coefficient (NTC) channels.
8. Connect the charger/load terminals to:
   a. Positive (+): PACK+
   b. Negative (-): PACK-
9. If using the EV2790-0000-FP-00A, connect SDA, SCL, and GND to the USB-to-I^2C communication interface (see Figure 9 on page 10). If using the EV2790-0002-FP-00A, connect NCS, SCK, SDO, SDI, and GND to the USB-to-SPI communication interface (see Figure 10 on page 10).
10. Connect the EVKT-USBI2C-02 or EVKT-USBSPI-00 to the computer.

MPS Proprietary Information. Patent Protected. Unauthorized Photocopy and Duplication Prohibited.
© 2025 MPS. All Rights Reserved.

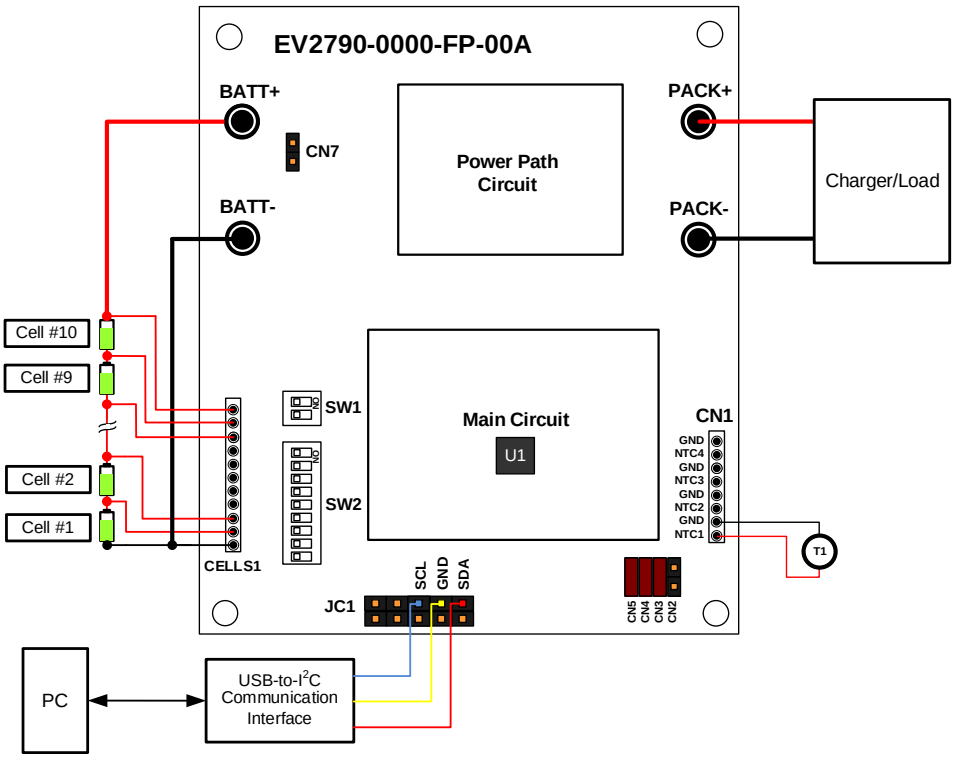

Figure 9: EV2790-0000-FP-00A Wire Connection

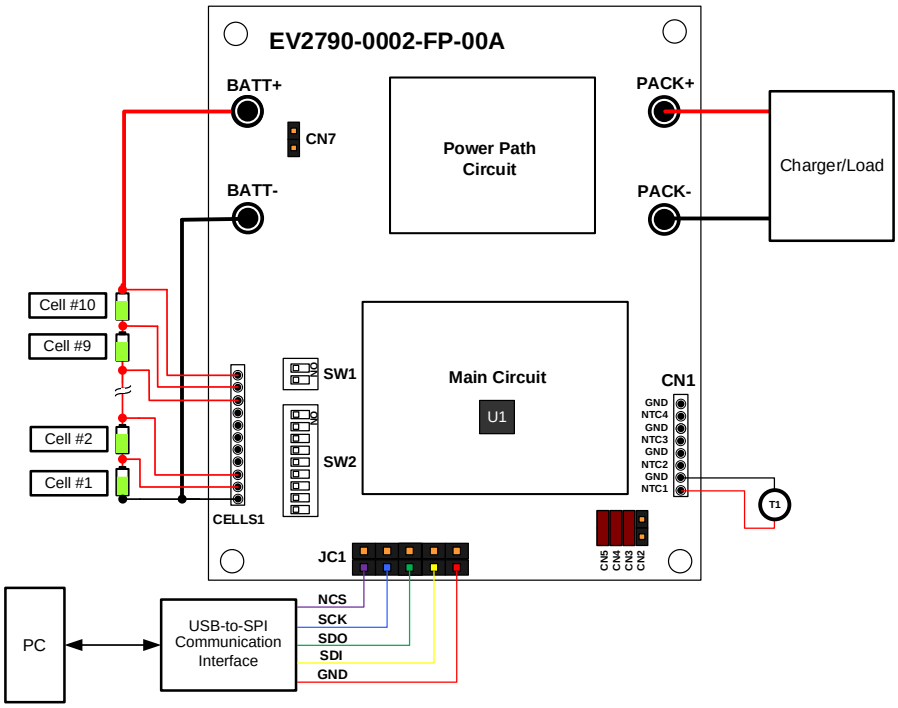

Figure 10: EV2790-0002-FP-00A Wire Connection

MPS Proprietary Information. Patent Protected. Unauthorized Photocopy and Duplication Prohibited.
© 2025 MPS. All Rights Reserved.

3.2 Powering Up the EVB

1. Connect the cell terminals to the voltage sensing connectors.
2. Preset the battery voltage (V_{BATT}) between 18V and 55V, then turn off the power supply.
3. Connect the battery terminals to:
   a. Positive (+): BATT+
   b. Negative (-): BATT-
4. Turn on the power supply. The device should start up automatically.

3.3 Software Set-Up

After connecting the hardware according to the steps above, follow the steps below to use the GUI software:

1. Start up the MP2790 GUI software. It should automatically check the EVB connection.
   - If the connection is successful, the USB and MP2790 demo board statuses are listed as "Connected" at the bottom left of the screen (see Figure 11).
   - If the connection is unsuccessful, the USB and MP2790 demo board statuses are listed as "Disconnected" in red at the bottom left of the screen. Check the connections between the EVB, communication interface, and PC. Unplug the USB cable from the PC, then plug it back in.
     - If the MP2790 demo board status is listed as "Disconnected," this means that the evaluation board is not connected correctly.
     - If the USB status is listed as "Disconnected," this means that the USB communication interface is not connected correctly.

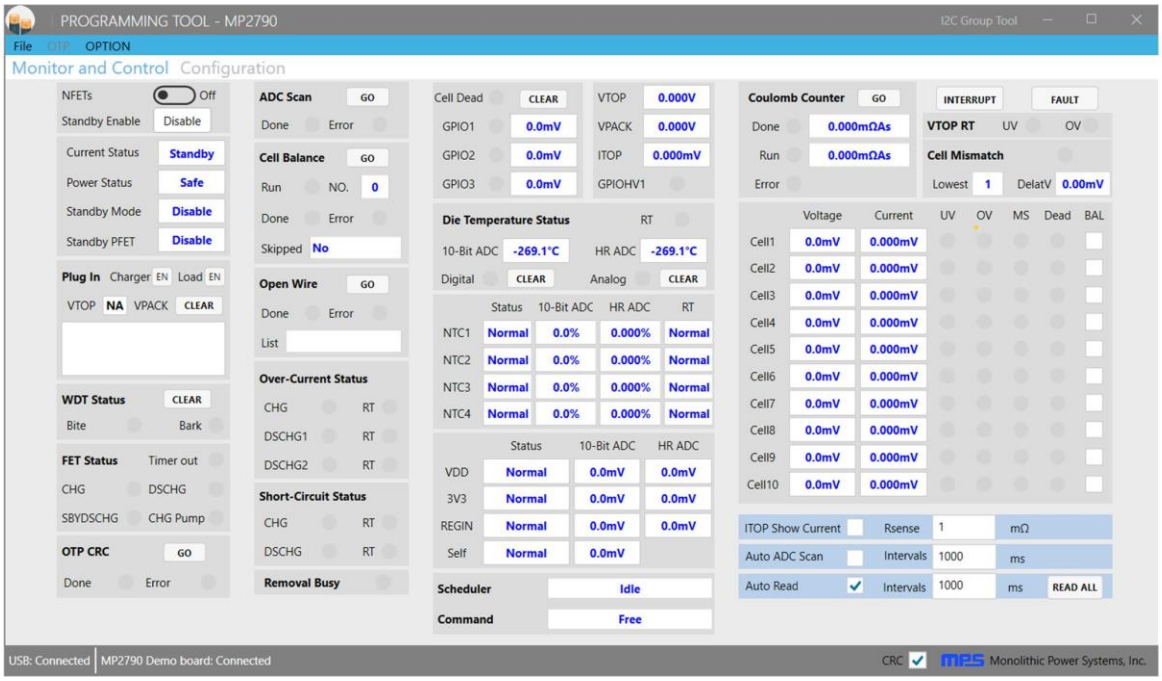

Figure 11: USB and MP2790 Demo Board Statuses Show Successful Connection

MPS Proprietary Information. Patent Protected. Unauthorized Photocopy and Duplication Prohibited.
© 2025 MPS. All Rights Reserved.

2. If the user CRC function must be enabled, check the “CRC” box at the bottom right of the GUI screen. This value cannot be written to the register later.
3. Click the “Configuration” tab in the menu to switch to the configuration view. Click the “Read All” button to read the register values. The default values are displayed.
4. Configure the number of cells in series, where between 7 cells and 10 cells can be enabled. Click the “Write All” button to save the configurations to the IC.
5. Set each protection function and its corresponding threshold, interrupt, and fault configurations according to the application specifications. These settings are available in the second and third columns. Click the “Write All” button to save the configurations to the IC.
6. During configuration, the IC must be in safe mode, with all the MOSFETs turned off. All the voltage monitoring protections are disabled in safe mode by default. If a protection is required in safe mode, enable the “HW VADC at Safe” setting (see Figure 12).

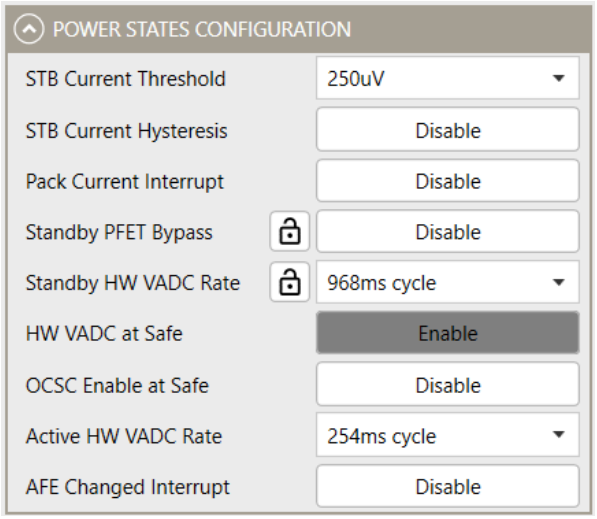

Figure 12: HW VADC at Safe Is Enabled

⚠ *All changes made via the I²C/SPI are restored to their default values once the EVB shuts down.*

3.4 Device Configuration Instructions

The MP2790 can be custom configured. All one-time programmable (OTP) and multiple-time programmable (MTP) registers can be configured via the microcontroller unit (MCU). It is not recommended to use MTP memory in application with the MCU. The MTP registers can be configured up to three times. OTP memory and one-time MTP are performed at the factory, allowing the user to use MTP twice. Follow the instructions outlined below to create and export customized configurations as well as to configure the MTP.

⚠ *Once the lock bit in the OTP/MTP is set to 1, the corresponding setting register cannot be modified anymore.*

Create and Export Customized Configurations

1. Using a computer, open the MPS GUI software.
2. Click the “Configuration” tab in the menu to switch to the configuration view.
3. Select “OTP View” from the OTP drop-down menu to enter OTP and MTP view (see Figure 13 on page 13).

MPS Proprietary Information. Patent Protected. Unauthorized Photocopy and Duplication Prohibited.
© 2025 MPS. All Rights Reserved.

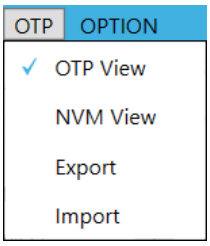

Figure 13: Select OTP View

4. In OTP and MTP view, all parameters that are not relevant to OTP and MTP cannot be modified. Any other parameters can be adjusted as necessary (see Figure 14).

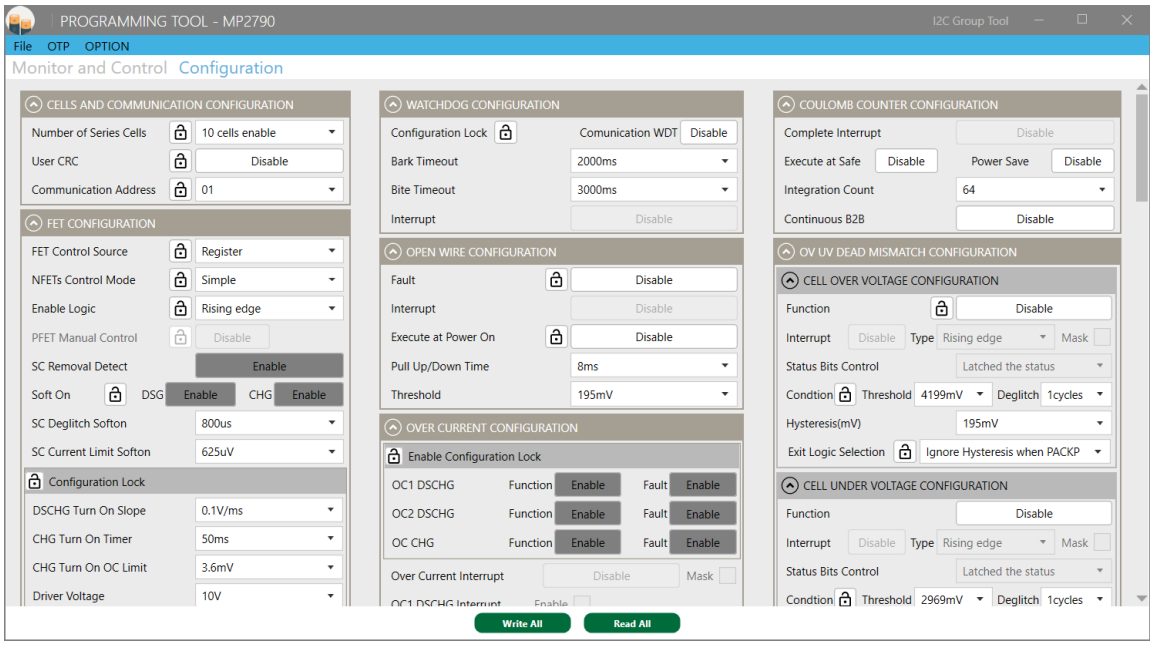

Figure 14: OTP and MTP View

5. Clicking “Export” to export the configurations from the OTP drop-down menu.
6. Find a location for the exported file, rename the file if necessary, and click “Save.” The configurations are saved in a text file (see Figure 15).

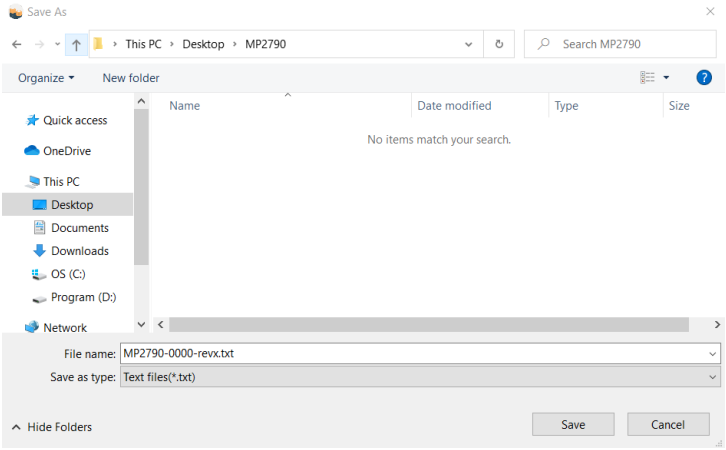

Figure 15: Save the Exported Configuration to Desired Location

7. Send this file to an MPS FAE to create a custom “-xxxx” code.

MPS Proprietary Information. Patent Protected. Unauthorized Photocopy and Duplication Prohibited.
© 2025 MPS. All Rights Reserved.

MTP Configuration

1. Using a computer, open the MPS GUI software. Ensure that the EVB is powered.
2. Ensure that there is a successful connection between the EVB and computer.
3. Select “NVM View” from the OTP drop-down menu to enter non-volatile memory (NVM) view.
4. In NVM view, all parameters that are not relevant to MTP cannot be modified. Any other parameters can be modified as necessary (see Figure 16).

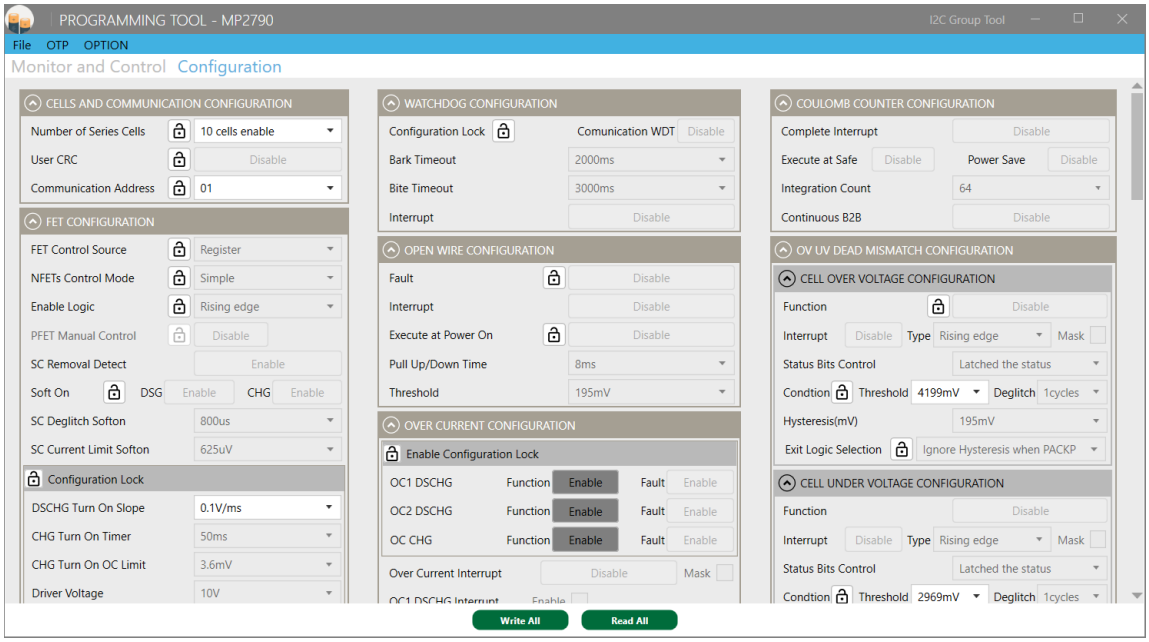

Figure 16: NVM View

5. Click “I2C Group Tool” (for the -0000 configuration code) or “SPI Group Tool” (for the -0002 configuration code) at the top right of the GUI window to configure a single register in the “COMM REV2.0” window that pops up (See Figure 17 on page 15).

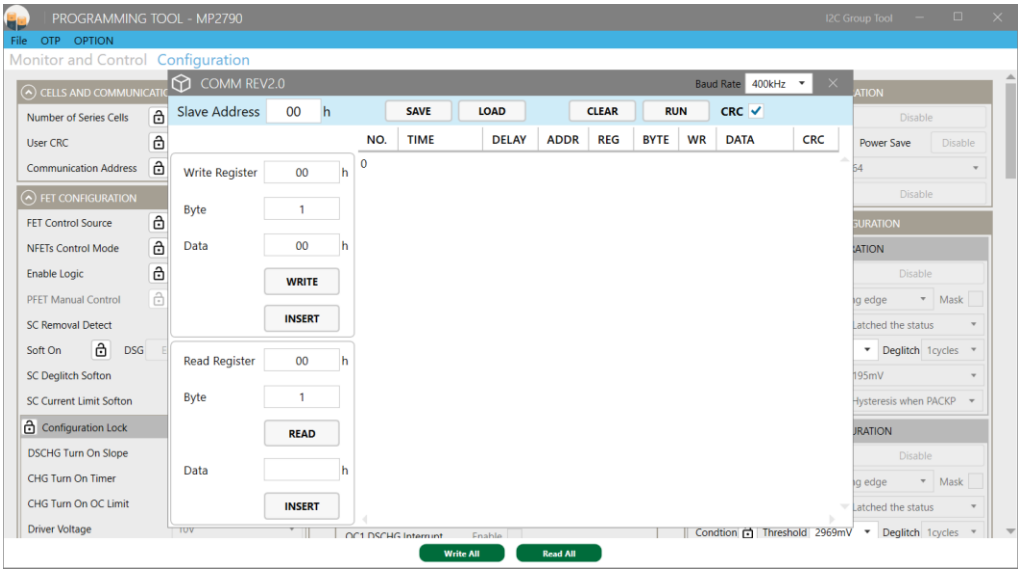

Figure 17: Group Tool to Configure a Single Register

MPS Proprietary Information. Patent Protected. Unauthorized Photocopy and Duplication Prohibited.
© 2025 MPS. All Rights Reserved.

6. Check the number of times that MTP has been performed by reading NVM_STATUS. Stop MTP if NVM Page 3 has been fully configured (register 0xB4, bits[5:3] = 3'b1xx).
7. Apply a 7.5V voltage to the NSHDN pin by connecting the 7.5V power supply terminals to:
   a) Positive (+): VMTP
   b) Negative (-): GND
8. Write the appropriate value to the register that enables MTP.
9. Write register 0xB9 to 0xA5B6 to enable the stored command.
10. Writing 1 to STORE_NVM_CMD (register 0xB8, bit[3]) to send the command to store the register's current value to the NVM.
11. Wait for STORE_IN_PROGRESS (register 0xB8, bit[15]) to return to 0.
12. Recover the NSHDN pin to 3.3V.
13. If a user tries to perform MTP on a device that has been configured three times previously, the GUI software allows the user to proceed normally; however, it may trigger an OTP CRC error and cause all configurations to fail to load. Confirm that MTP has not already been configured three times before performing MTP.

3.5 Troubleshooting Tips

EVKT-USBI2C-02 and EVKT-USBSPI-00 Driver Installation Problem

If the USB driver is not properly installed, manual installation is required. Follow the steps below to manually install the EVKT-USBI2C-02 or EVKT-USBSPI-00 driver:

Note: Find "USBXpress Device" in the Device Manager.

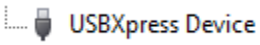

If the PC is running Windows 10, check the driver version of USBXpress Device. Windows 10 automatically installs the older USB driver, which is not compatible. The correct driver version is 4.0.0.0 (see Figure 18).

1. Install the correct "USBXpress ".exe" file. Choose either the 32-bit or 64-bit operating system.

   32-bit: USBXpressInstaller_x86.exe

   64-bit: USBXpressInstaller_x64.exe
2. Connect the EVKT-USBI2C-02 or EVKT-USBSPI-00 communication interface to the PC with the USB cable (see Figure 18 on page 16).

MPS Proprietary Information. Patent Protected. Unauthorized Photocopy and Duplication Prohibited.
© 2025 MPS. All Rights Reserved.

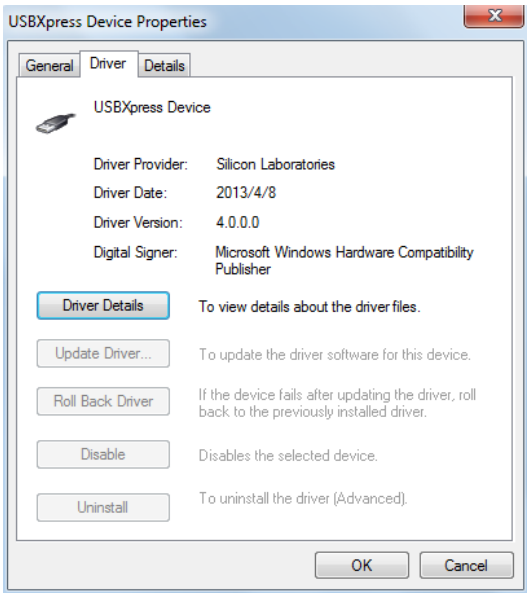

Figure 18: Correct Driver Version

Communication Problem

If the EVB is unable to communicate after start-up, check whether the VTOP pin voltage (V_{TOP}) and NSHDN pin voltage (V_{NSHDN}) meet the following conditions for normal operation:

- V_{TOP} > 20V
- V_{NSHDN} > 3V

To determine whether the IC is operating properly, check that the REGCTRL, REGIN, and VDD pin voltages ($V_{REGCTRL}$, V_{REGIN}, and V_{DD}, respectively) meet the following specifications:

- $V_{REGCTRL}$ = 5.6V
- V_{REGIN} = 5V
- V_{DD} = 1.8V

Thermal Recovery

If the MP2790 is in a shutdown state due to the die temperature exceeding the thermal protection threshold, then the IC starts up again once the die's temperature decreases.

MPS Proprietary Information. Patent Protected. Unauthorized Photocopy and Duplication Prohibited.
© 2025 MPS. All Rights Reserved.

Section 4. Ordering Information

The components of the evaluation kit can be purchased separately depending on user needs.

Part Number	Description
EVKT-MP2790-0000	Complete evaluation kit
Contents of EVKT-MP2790-0000	
EV2790-0000-FP-00A	MP2790-0000 evaluation board
EVKT-USBI2C-02	Includes one USB to I^2C communication interface, one USB cable, and one ribbon cable
Online resources	Includes GUI and supplemental documents

Part Number	Description
EVKT-MP2790-0002 ***EOL, Refer to EVKT-MP2790-0000***	Complete evaluation kit
Contents of EVKT-MP2790-0002	
EV2790-0002-FP-00A	MP2790-0002 evaluation board
EVKT-USBSPI-00	Includes one USB to SPI communication interface, one USB cable, and one ribbon cable
Online resources	Includes GUI and supplemental documents

Order directly from MonolithicPower.com or our distributors.

MPS Proprietary Information. Patent Protected. Unauthorized Photocopy and Duplication Prohibited.
© 2025 MPS. All Rights Reserved.

REVISION HISTORY

Revision #	Revision Date	Description	Pages Updated
1.0	7/27/2023	Initial Release	-

Notice: The information in this document is subject to change without notice. Please contact MPS for current specifications. Users should warrant and guarantee that third-party Intellectual Property rights are not infringed upon when integrating MPS products into any application. MPS will not assume any legal responsibility for any said applications.

MPS Proprietary Information. Patent Protected. Unauthorized Photocopy and Duplication Prohibited.
© 2025 MPS. All Rights Reserved.