User Guide

MP2797 Evaluation Kit (EVKT-MP2797-0000/0002)

Table of Contents

Overview 3
Kit Contents 3
Features and Benefits 4
Kit Specifications 5
Section 1. Hardware Specifications 6
1.1 Personal Computer Requirements 6
1.2 EV2797-000x-FP-00B Specifications 6
1.3 EVKT-USBI2C-02 and EVKT-USBSPI-00 Specifications 7
Section 2. Software Requirements 8
2.1 Software Installation Procedure 8
Section 3. Evaluation Kit Test Set-Up 9
3.1 Hardware Set-Up 9
3.2 Powering Up the EVB 11
3.3 Software Set-Up 11
3.5 Troubleshooting Tips 12
Section 4. Ordering Information 14

MPS Proprietary Information. Patent Protected. Unauthorized Photocopy and Duplication Prohibited.
© 2023 MPS. All Rights Reserved.

Overview

The EVKT-MP2797-0000 and EVKT-MP2797-0002 are evaluation kits for the MP2797. This board is designed for the MP2797 when used as a robust battery management device. The MP2797 provides a complete analog front-end (AFE) monitoring and protection solution that is designed for 7-cell to 16-cell series battery systems.

Kit Contents

EVKT-MP2797-0000 kit contents (items below can be ordered separately):

#	Part Number	Item	Quantity
1	EV2797-0000-FP-00B	MP2797-0000 evaluation board	1
2	EVKT-USBI2C-02	Includes one USB to I^2C communication interface, one USB cable, and one ribbon cable	1
3	Online resources	Includes GUI and supplemental documents	-

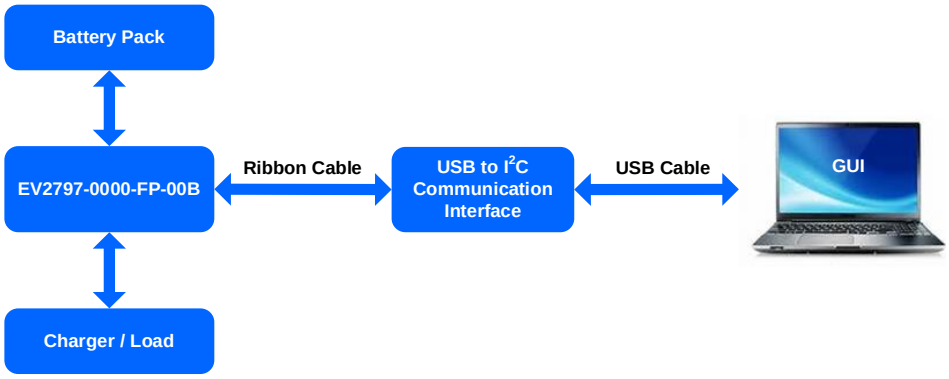

Figure 1: EVKT- MP2797-0000 Evaluation Kit Set-Up

EVKT-MP2797-0002 kit contents (items below can be ordered separately):

#	Part Number	Item	Quantity
1	EV2797-0002-FP-00B	MP2797-0002 evaluation board	1
2	EVKT-USBSPI-00	Includes one USB to SPI communication interface, one USB cable, and one ribbon cable	1
3	Online resources	Includes GUI and supplemental documents	-

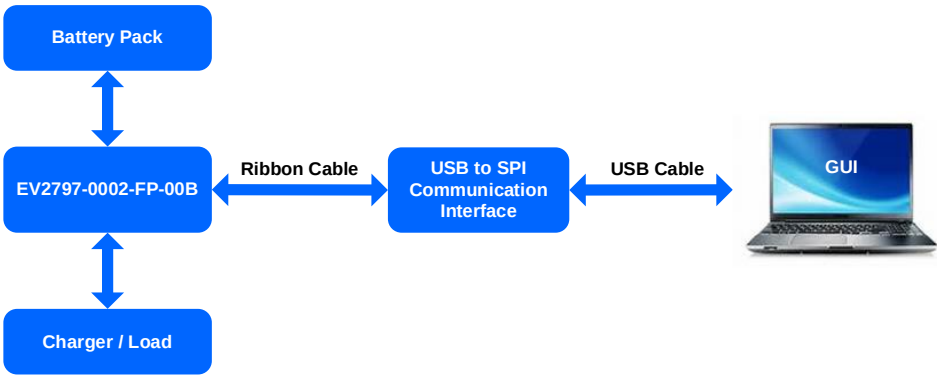

Figure 2: EVKT- MP2797-0002 Evaluation Kit Set-Up

MPS Proprietary Information. Patent Protected. Unauthorized Photocopy and Duplication Prohibited.
© 2023 MPS. All Rights Reserved.

Features and Benefits

- Supports 7-Cell to 16-Cell Series Battery Packs
- I^2C or SPI Interface with 8-Bit Cyclic Redundancy Check (CRC)
- Analog Front-End (AFE) Monitor
  - Strictly Synchronized Current and Voltage Measurement for Impedance Sensing
  - 15-Bit Analog-to-Digital Converter (ADC) with <5mV Total Cell Measurement Error at 25°C
  - 16-Bit ADC with <±0.5% Pack Current and Coulomb Counting Measure Error at 25°C via SRP and SRN
- Configurable Protections:
  - Charge and Discharge Over-Current Protection (OCP)
  - Charge and Discharge Short-Circuit Protection (SCP)
  - Cell Under-Voltage Protection (UVP) and Over-Voltage Protection (OVP)
  - Pack UVP and OVP
  - Cell Low- and High-Temperature Protection
  - Die High-Temperature Protection
- Integrated High-Side MOSFET (HS-FET) Driver:
  - Supports MOSFET Soft-Start Discharge Control to Eliminate a Pre-Charge Circuit
  - Drives Up to 70A DC with Parallel N-Channel MOSFETs
  - GPIO or Register Controlled MOSFET Enable
- Passive Cell Balancing Up to 58mA per Cell:
  - Can Drive External Balancing Transistors
  - Automatic or Manual Control
- Additional Functionality:
  - Integrated 3.3V and 5V Low-Dropout (LDO) Regulators
  - Reduced Current Standby Mode
  - Load and Charge Plug-In Detection
  - High-Voltage and Low-Voltage GPIOs
  - Dedicated Thermistor Inputs
  - Open-Wire Detection
  - Persistent Dead Battery Flag
  - Lockable Multiple-Time Programmable (MTP) Memory for Key Protection Thresholds
- Random Cell Connection Tolerant
- 48-pin TQFP Package (7mmx7mm)

⚠ *All changes made in I^2C/SPI mode are not retained once the evaluation board shuts down.*

⚠ *Information written in MTP mode cannot be changed.*

MPS Proprietary Information. Patent Protected. Unauthorized Photocopy and Duplication Prohibited.
© 2023 MPS. All Rights Reserved.

Adjustable Features

I²C/SPI	MTP
• Cell and communication configuration • MOSFET configuration • Plug-in configuration • Pin configuration • ADC scan configuration • Watchdog configuration • Open-wire configuration • Coulomb counting configuration • Over-current (OC) configuration • Short circuit configuration • Short circuit removal configuration • NTC configuration • Die temperature configuration • Cell balancing configuration • Cell over-voltage (OV) configuration • Cell under-voltage (UV) configuration • Cell mismatch configuration • Cell dead configuration • VTOP OV configuration • VTOP UV configuration • REGIN, 3V3, VDD, and ADC self-test check configuration • OTP CRC check configuration • Interrupt configuration	• Cell and communication configuration • MOSFET configuration • Plug-in configuration • Pin configuration • ADC scan configuration • Watchdog configuration • Open-wire configuration • Coulomb counting configuration • OC configuration • Short circuit configuration • Short circuit removal configuration • NTC configuration • Die temperature configuration • Cell balancing configuration • Cell OV configuration • Cell UV configuration • Cell mismatch configuration • Cell dead configuration • VTOP OV configuration • VTOP UV configuration • REGIN, 3V3, VDD, and ADC self-test check configuration • OTP CRC check configuration

Kit Specifications

Features	Specifications
Battery Pack Voltage	18V to 75.2V
Cell Voltage	0V to 5V
Operating Systems Supported	Windows 7, or later
System Requirements	Minimum 25.6MB free
GUI Software	Programming tool MP2797 V1.1.0.3
EVB Size (LxW)	14cmx9.6cm

MPS Proprietary Information. Patent Protected. Unauthorized Photocopy and Duplication Prohibited.
© 2023 MPS. All Rights Reserved.

Section 1. Hardware Specifications

1.1 Personal Computer Requirements

The following minimum conditions must be met to use the EVKT-MP2797-000x:

- Operating System of Windows 7, or later
- Net Framework 4.0
- PC with a minimum of one available USB port
- At least 25.6MB of free space

1.2 EV2797-000x-FP-00B Specifications

The EV2797-0000-FP-00B and EV2797-0002-FP-00B are evaluation boards for the MP2797. For more information, refer to the EV2797-0000_0002-FP-00B datasheet.

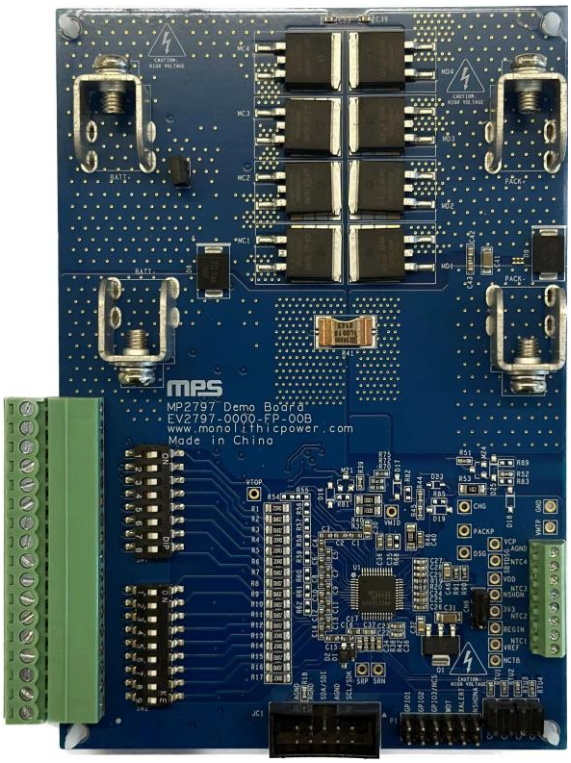

Figure 3: EV2797-0000-FP-00B Evaluation Board

Feature	Specifications
Battery Pack Voltage	18V to 75.2V
Cell Voltage	0V to 5V
EVB Size (LxW)	14cmx9.6cm

MPS Proprietary Information. Patent Protected. Unauthorized Photocopy and Duplication Prohibited.
© 2023 MPS. All Rights Reserved.

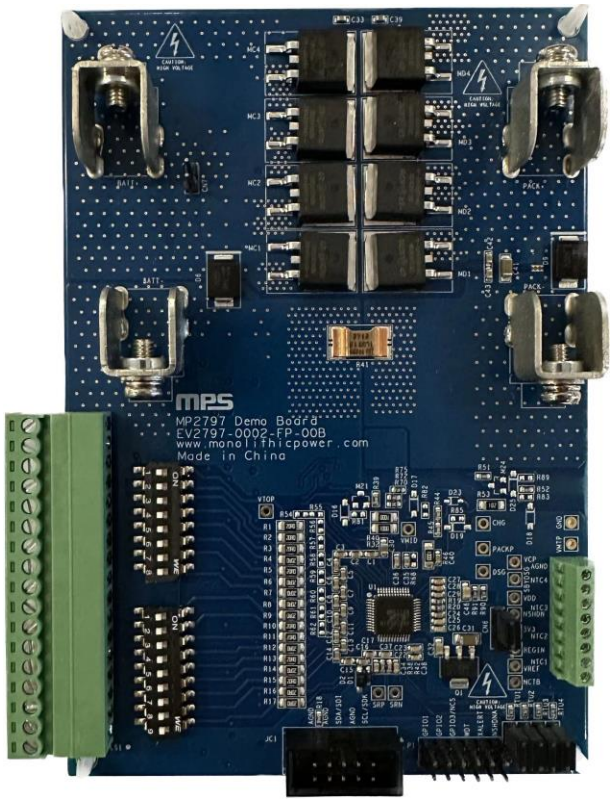

Feature	Specifications
Battery Pack Voltage	18V to 75.2V
Cell Voltage	0V to 5V
EVB Size (LxW)	14cmx9.6cm

Figure 4: EV2797-0002-FP-00B Evaluation Board

1.3 EVKT-USBI2C-02 and EVKT-USBSPI-00 Specifications

The EVKT-USBI2C-02 refers to the USB-to-I²C communication interface, which connects the EVB, the PC, and its supporting accessories (see Figure 5). It provides I²C capabilities. Together with MPS Virtual Bench Pro and I²C GUI tools, it provides a quick and easy way to evaluate the performance of MPS digital products. For more details, refer to the EVKT-USBI2C-02 datasheet.

Figure 5: EVKT-USBI2C-02 Communication Interface

MPS Proprietary Information. Patent Protected. Unauthorized Photocopy and Duplication Prohibited.
© 2023 MPS. All Rights Reserved.

The EVKT-USBSPI-00 refers to the USB-to-SPI communication interface, which connects the EVB, the PC, and its supporting accessories (see Figure 6). It provides SPI capabilities. Together with MPS Virtual Bench Pro and SPI GUI tools, it provides a quick and easy way to evaluate the performance of MPS digital products. For more details, refer to the EVKT-USBSPI-00 datasheet.

Figure 6: EVKT-USBSPI-00 Communication Interface

Section 2. Software Requirements

2.1 Software Installation Procedure

Configuration occurs through the MPS GUI. Follow the instructions below to install the software:

Note: This software can be downloaded from the MPS website.

1. Download and extract the “Programming tool MP2797 V1.1.0.3” file.
2. Double click the “.exe” file to open the set-up guide (see Figure 7). If a protection window comes up, click “More info,” then click “Run anyway.”
3. Follow the prompts in the set-up guide.
4. Wait for the status screen to verify that installation is complete (see Figure 8 on page 9).

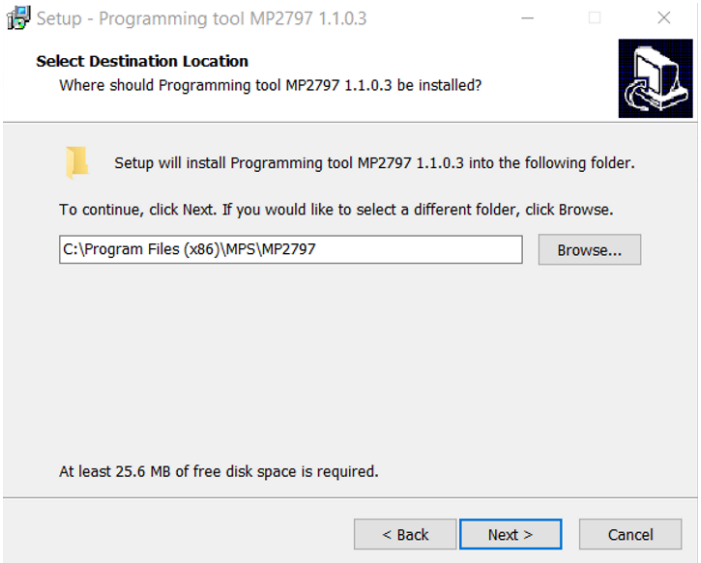

Figure 7: MPS GUI Set-Up Guide

MPS Proprietary Information. Patent Protected. Unauthorized Photocopy and Duplication Prohibited.
© 2023 MPS. All Rights Reserved.

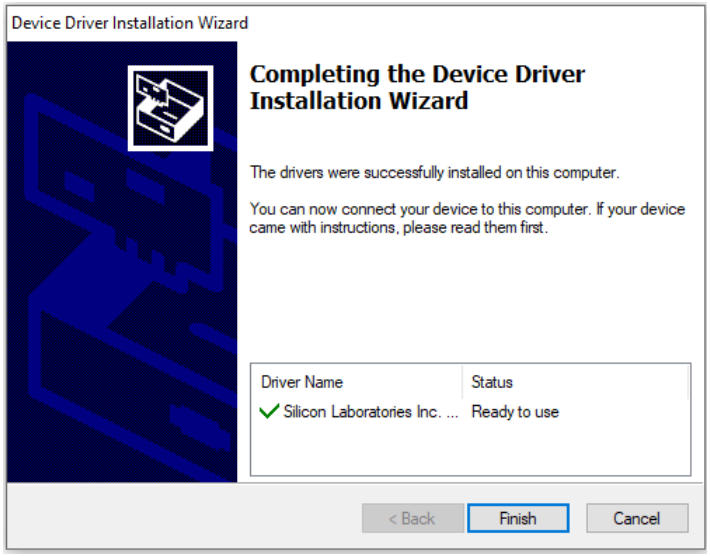

Figure 8: Driver Set-Up Success

Section 3. Evaluation Kit Test Set-Up

3.1 Hardware Set-Up

The hardware must be properly configured prior to use. Follow the instructions below to set up the EVB:

1. Remove the CN7 jumper and turn off all channels of SW1 and SW2.
2. Short all unused cell channels (channel x, where x is 8 to 16) to the practical maximum cell channel using 0Ω resistors, depending on the number of cells in series in the battery pack. If there are 16 cells in series, then skip this step. For example, a battery back with 10 cells in series, add a 0Ω resistor at R54, R55, R56, R57, R58, and R59.
3. Connect the cell terminals to the voltage sensing connectors. For a battery pack with <16 cells in series, float the higher channel connectors.
4. Connect the battery terminals to:
   a. Positive (+): BATT+
   b. Negative (-): BATT-
5. Remove the CN2, CN3, CN4, and CN5 jumpers.
6. Connect and locate the temperature sensors. The temperature connectors can support up to four negative temperature coefficient (NTC) channels.
7. Connect the charger/load terminals to:
   a. Positive (+): PACK+
   b. Negative (-): PACK-
8. If using the EV2797-0000-FP-00B, connect SDA, SCL, and GND to the USB-to-I^2C communication interface (see Figure 9 on page 10). If using the EV2797-0002-FP-00B, connect NCS, SCK, SDO, SDI, and GND to the USB-to-SPI communication interface (see Figure 10 on page 10).
9. Connect the EVKT-USBI2C-02 or EVKT-USBSPI-00 to the computer.

MPS Proprietary Information. Patent Protected. Unauthorized Photocopy and Duplication Prohibited.
© 2023 MPS. All Rights Reserved.

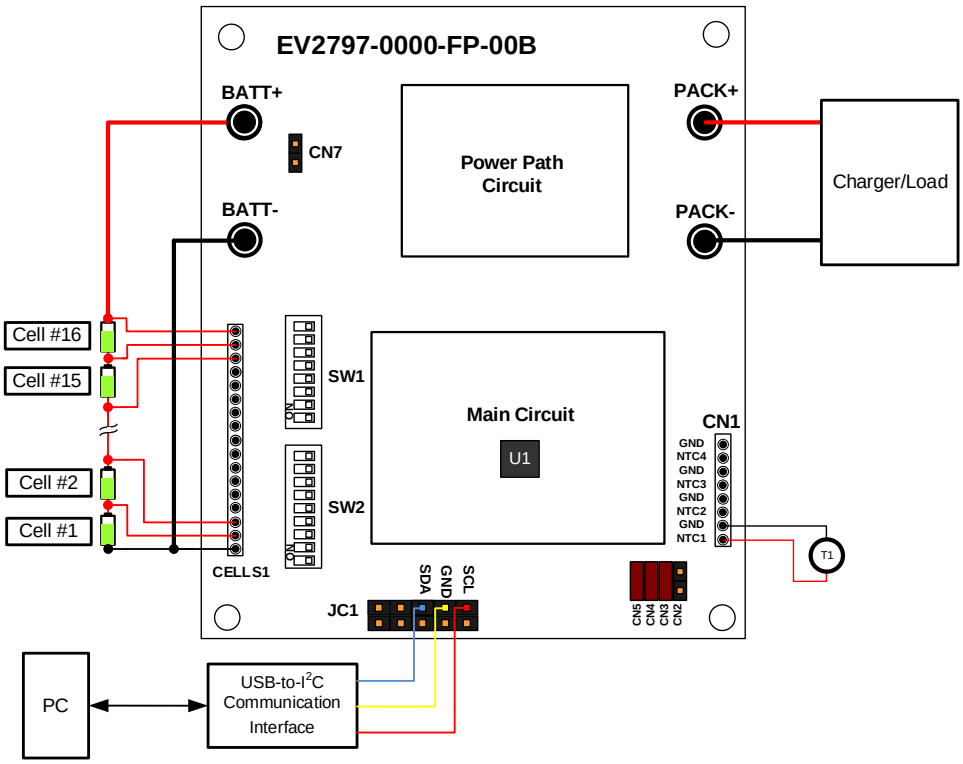

Figure 9: EV2797-0000-FP-00B Wire Connection

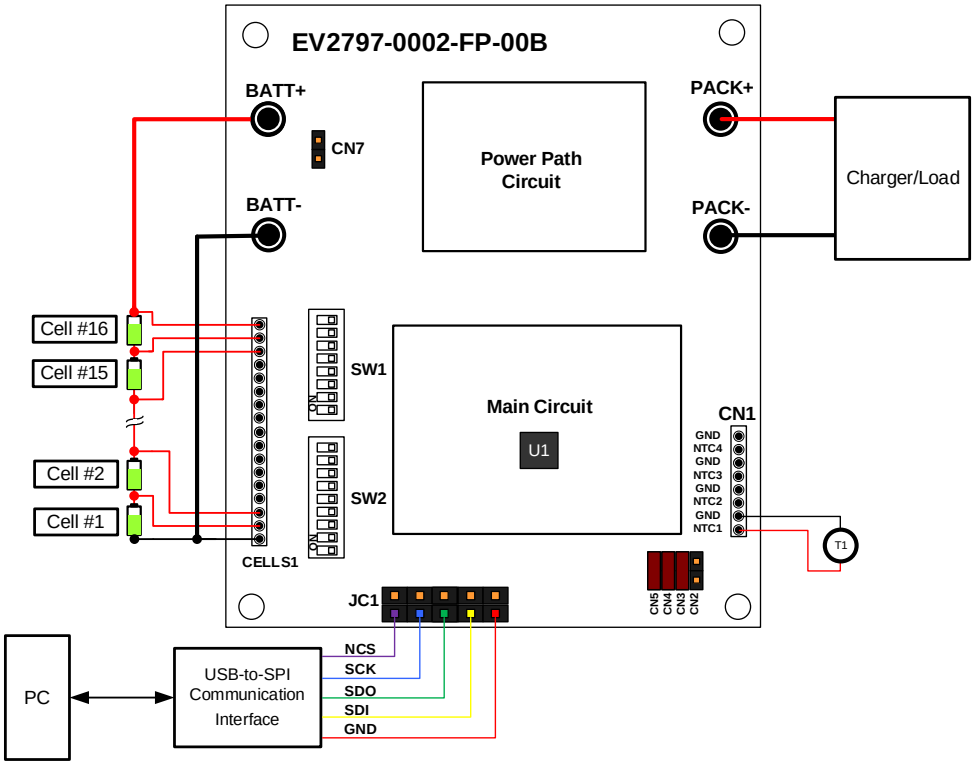

Figure 10: EV2797-0002-FP-00B Wire Connection

MPS Proprietary Information. Patent Protected. Unauthorized Photocopy and Duplication Prohibited.
© 2023 MPS. All Rights Reserved.

3.2 Powering Up the EVB

1. Connect the cell terminals to the voltage sensing connectors.
2. Preset the battery voltage (V_{BATT}) between 18V to 75.2V, then turn off the power supply.
3. Connect the battery terminals to:
   a. Positive (+): BATT+
   b. Negative (-): BATT-
4. Turn on the power supply. The device should start up automatically.

3.3 Software Set-Up

After connecting the hardware according to the steps above, follow the steps below to use the GUI software:

1. Start the MP2797 GUI software. It should automatically check the EVB connection.
   - If the connection is successful, both the USB and MP2797 demo board statuses will be listed as "Connected" (see Figure 11).
   - If the connection is unsuccessful, the USB and MP2797 demo board statuses will be listed as "Disconnected" in red. Check the connections between the EVB, the communication interface, and the PC. Unplug the USB cable from the PC and plug it back in again.
     - If the MP2797 demo board status is listed as "Disconnected", this means that the evaluation board is not connected correctly.
     - If the USB status is listed as "Disconnected", this means that the USB communication interface is not connected correctly.

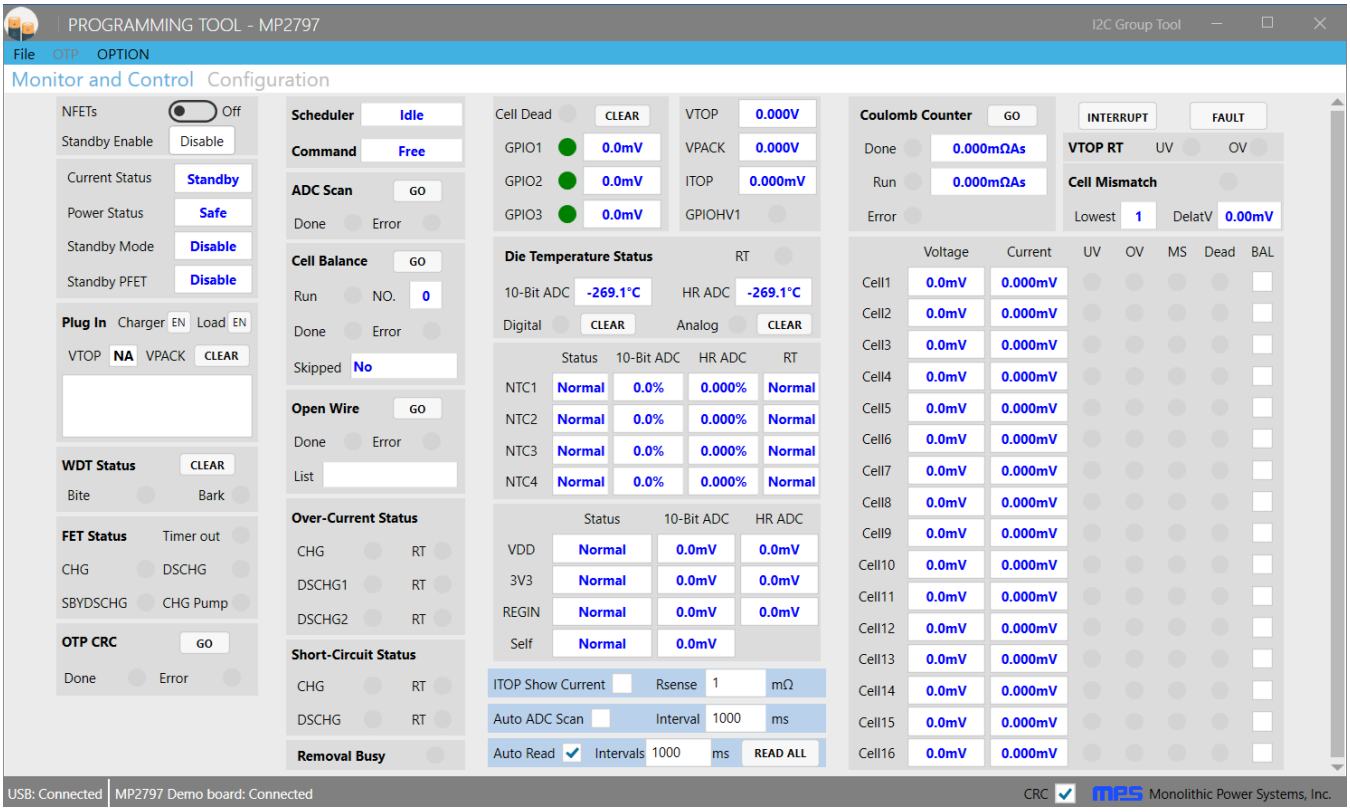

Figure 11: USB and MP2797 Demo Board Show as Connected

MPS Proprietary Information. Patent Protected. Unauthorized Photocopy and Duplication Prohibited.
© 2023 MPS. All Rights Reserved.

2. If the user CRC function should be enabled, check the “CRC” box at the bottom right of the GUI. This value cannot be written to the register later.
3. Click the “Configuration” tab in the menu to switch to configuration view. Click the “Read All” button to read the register values. The default values should be displayed.
4. Configure the number of cells in series (between 7 and 16 cells can be enabled). Click to “Write All” button to save the configurations to the IC.
5. Set each protection function and its corresponding threshold, interrupt, and fault configurations according to the application specifications. These settings can be found in the second and third columns. Click to “Write All” button to save the configurations to the IC.
6. During configuration, the IC should be in safe mode, with all of the MOSFETs turned off. All of the voltage monitoring protections are disabled in safe mode by default. If a protection is required in safe mode, enable the “HW VADC at Safe” setting (see Figure 12).

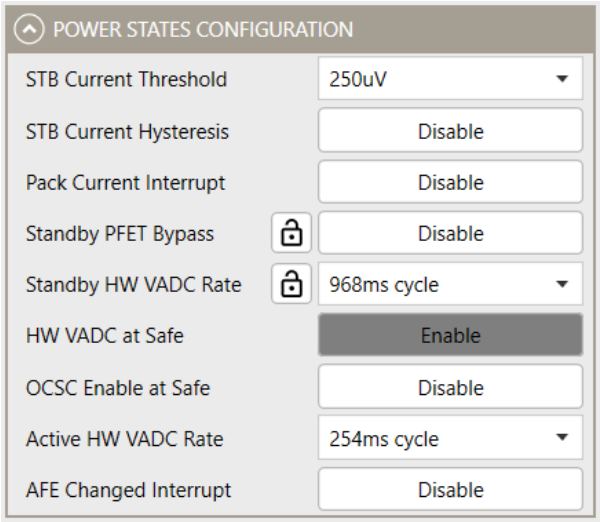

Figure 12: HW VADC at Safe Is Enabled

⚠ *All changes made via the I²C/SPI are restored to their default values once the EVB shuts down.*

3.5 Troubleshooting Tips

EVKT-USBI2C-02 and EVKT-USBSPI-00 Driver Installation Problem

If the USB driver is not properly installed, manual installation is required. Follow the steps below to manually install the EVKT-USBI2C-02 or EVKT-USBSPI-00 driver:

Note: Find “USBXpress Device” in the Device Manager.

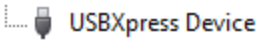

If the PC is running Windows 10, check the driver version of USBXpress Device. Windows 10 will automatically install the older USB driver, which is not compatible. The correct driver version is 4.0.0.0 (see Figure 13 on page 13).

1. Install the correct "USBXpress “.exe” file. Choose either the 32-bit or 64-bit operating system.

   32-bit: USBXpressInstaller_x86.exe

   64-bit: USBXpressInstaller_x64.exe

2. Connect the EVKT-USBI2C-02 or EVKT-USBSPI-00 communication interface to the PC with a USB cable.

MPS Proprietary Information. Patent Protected. Unauthorized Photocopy and Duplication Prohibited.
© 2023 MPS. All Rights Reserved.

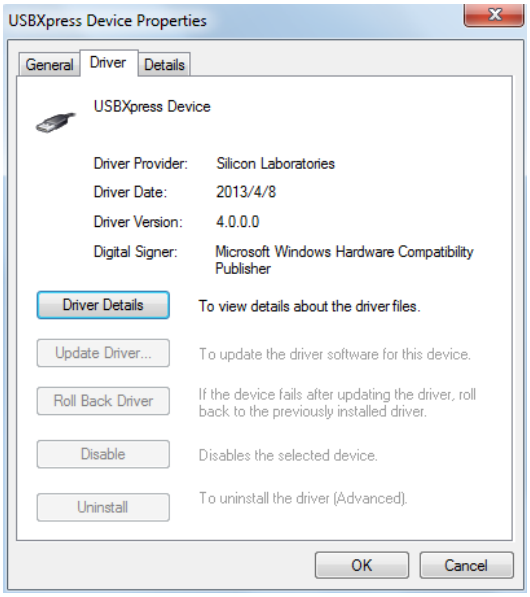

Figure 13: Correct Driver Version

Communication Problem

If the EVB is unable to communicate after start-up, check whether the VTOP pin voltage (V_{TOP}) and NSHDN pin voltage (V_{NSHDN}) meet the following conditions for normal operation:

- V_{TOP} > 20V.
- V_{NSHDN} > 3V.

To determine whether the IC is operating properly, check that the REGCTRL, REGIN, and VDD pin voltages ($V_{REGCTRL}$, V_{REGIN}, and V_{DD}, respectively) meet the following specifications:

- $V_{REGCTRL}$ = 5.6V
- V_{REGIN} = 5V
- V_{DD} = 1.8V

Thermal Recovery

If the MP2797 is shuts down due to the die temperature exceeding the thermal protection threshold, the IC starts up again once the die's temperature decreases.

MPS Proprietary Information. Patent Protected. Unauthorized Photocopy and Duplication Prohibited.
© 2023 MPS. All Rights Reserved.

Section 4. Ordering Information

The components of the evaluation kit can be purchased separately depending on user needs.

Part Number	Description
EVKT-MP2797-0000	Complete evaluation kit
Contents of EVKT-MP2797-0000	
EV2797-0000-FP-00B	MP2797-0000 evaluation board
EVKT-USBI2C-02	Includes one USB to I^2C communication interface, one USB cable, and one ribbon cable
Online resources	Includes GUI and supplemental documents

Part Number	Description
EVKT-MP2797-0002	Complete evaluation kit
Contents of EVKT-MP2797-0002	
EV2797-0002-FP-00B	MP2797-0002 evaluation board
EVKT-USBSPI-00	Includes one USB to SPI communication interface, one USB cable, and one ribbon cable
Online resources	Includes GUI and supplemental documents

Order directly from MonolithicPower.com or our distributors.

MPS Proprietary Information. Patent Protected. Unauthorized Photocopy and Duplication Prohibited.
© 2023 MPS. All Rights Reserved.

REVISION HISTORY

Revision #	Revision Date	Description	Pages Updated
1.0	3/17/2023	Initial Release	-

Notice: The information in this document is subject to change without notice. Please contact MPS for current specifications. Users should warrant and guarantee that third-party Intellectual Property rights are not infringed upon when integrating MPS products into any application. MPS will not assume any legal responsibility for any said applications.

MPS Proprietary Information. Patent Protected. Unauthorized Photocopy and Duplication Prohibited.
© 2023 MPS. All Rights Reserved.